YUNLI 允利刀具

数控刀具专业生产厂商

韶关育鑫精密切削工具有限公司

SHAOGUANYUXINPRECISION CUTTING TOOLS CO.,LTD

韶关育鑫精密切削工具有限公司

SHAOGUANYUXINPRECISION CUTTING TOOLS CO.,LTD

精益求精 领先工艺

公司简介

COMPANY INTROOUCTION

韶关育鑫精密切削工具有限公司致力于切削工具的研发制造及销售；以精致的外观及优良的品质得到广大用户的认可；公司主要产品类型有；精密切槽切断刀片、精密级内外圆车刀片、各式槽刀加工刀片（内槽、外槽、端面槽等）、螺纹刀以及异型非标刀片、公司自有厂房10000多平方米，拥有多台德国先进生产及检测设备、多种专业技术人员；我们用专业的技术，品质和服务期待与您合作！

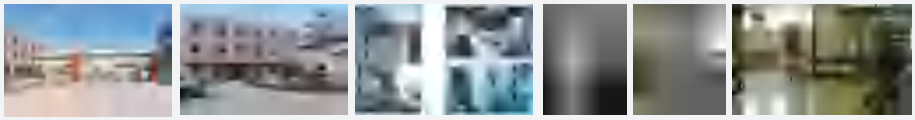

主要产品类型：

- 精密切槽切断刀片
- 精密级内外圆车刀片
- 各式槽刀加工刀片（内槽、外槽、端面槽等）
- 螺纹刀以及异型非标刀片

精益求精

允利刀具-争做中国高品质刀具的排头兵!

YUNLI®
允利刀具

Content 目录

外径切削刀具系统

M	C	L	N	R	2	5	2	5	M	1	2	*
1	2	3	4	5	6	7	8	9	10	11	12	13

1 刀片夹持方式 TYPE OF LOCKING

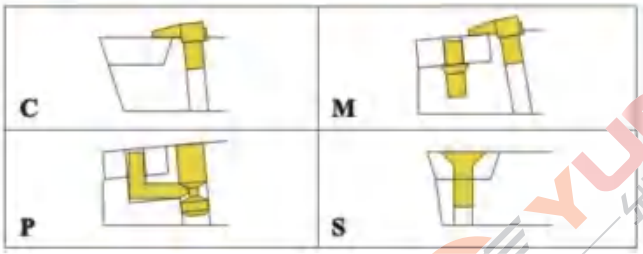

2 刀片形状 INSERT SHAPE

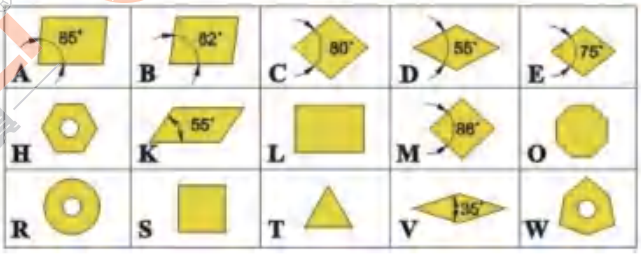

3 切入角 TYPE OF TOOL

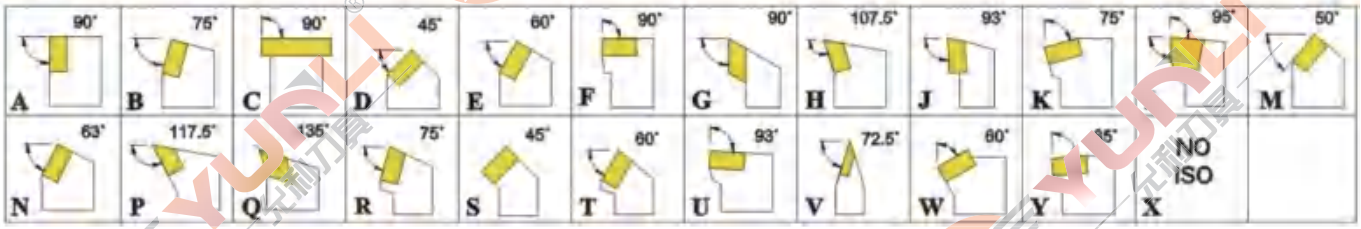

4 刀片逃隙角 RAKE ANGLES

6/7 刀柄高度 SHANK HEIGHT

刀柄长度 TOOL LENGTH

32	A
40	B
50	C
60	D
70	E
80	F
90	G
100	H
110	J
125	K
140	L
150	M
160	N
170	P
180	Q
200	R
250	S
300	T
350	U
400	V
450	W
500	Y
SPECIAL	X

5 方向 HAND OF TOOL

8/9 刀柄宽度 SHANK WIDTH

11/12 切刃长 CUTTING EDGE LENGTH

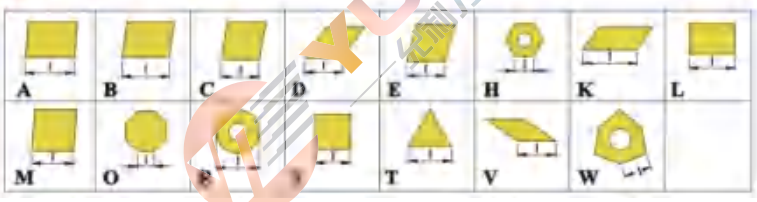

13 特殊备注 OPTIONAL CODE

INSERTS	R-L

内径切削刀具系统

S	2	0	R	S	C	L	C	R	0	9	*
6	8	9	10	1	2	3	4	5	11	12	13

1 刀柄 SHANK

S=钢柄　A=钢柄+中心水孔　B=抗震钢柄　C=钨钢柄　D=抗震钢本+中心水孔　E=钨钢柄+中心水孔
F=抗震钨钢柄　G=抗震钨钢柄+中心水孔　H=重金属　J=重金属+中心水孔

ISO刀刃识别系列

C	N	M	G	12	04	08	(E)	(N)	(MR)
1	2	3	4	5	6	7	8	9	10

1 刀片形状 INSERT SHAPE

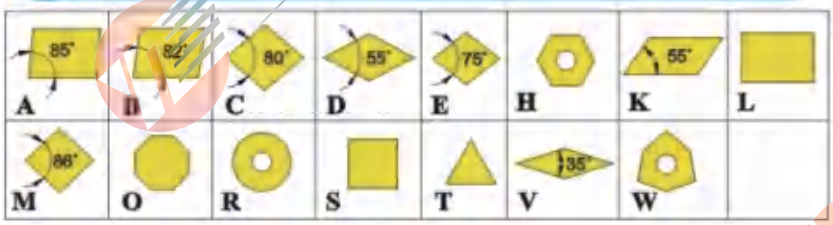

2 刀片逃角 CLEARANCE ANGLE

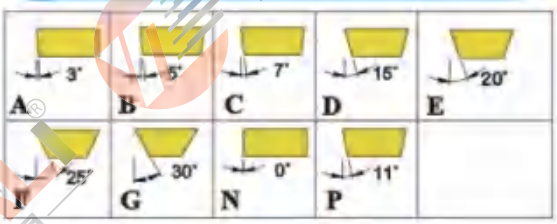

3 刀片厚度 TIP THICKNESS

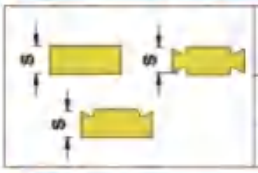

Index	01	T1	02	03	T3	04	05	06	07	09
S(mm)	1.59	1.98	2.38	3.18	3.97	4.76	5.56	6.35	7.94	9.52

4 刃口方向 CUTTING DIRECTION

5 刀尖R角 CORNER RADIUS

Index	02	04	08	12	16	24	00
r(mm)	0.2	0.4	0.8	1.2	1.6	2.4	0

00:Round insert (inch)
MO:Round insert (metr)

6 排屑槽 Manufacture's type designation

Chip breaker design

-MG　-M　-MR　-D　-DK

7 刀片公差 TOLERANCES CLASS

Tolerance	Range of tolerance		
	d±	m±	s±
A	0.025	0.005	0.025
C	0.025	0.013	0.025
E	0.025	0.025	0.025
F	0.013	0.005	0.025
G	0.025	0.025	0.05-0.13
H	0.013	0.013	0.025
J	0.05-0.15	0.005	0.025
K	0.05-0.15	0.013	0.025
L	0.05-0.15	0.025	0.025
M	0.05-0.15	0.08-0.2	0.05-0.13
N	0.05-0.15	0.08-0.2	[illegible]
U	0.08-0.25	0.13-0.38	0.13

8 刀片沟孔 INSERT FEATURES

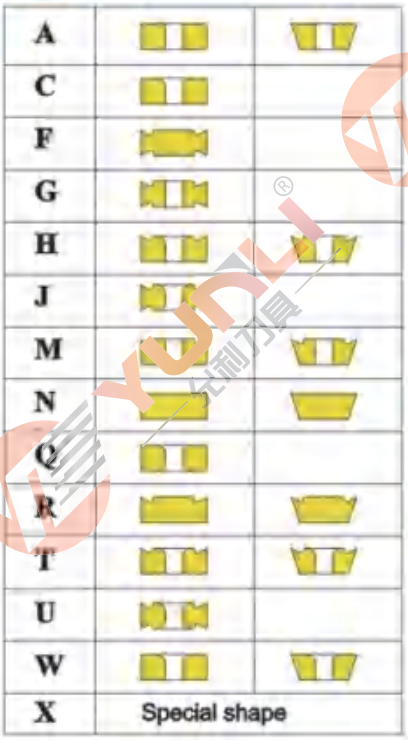

9 刀片边长 EDGE LENGTH

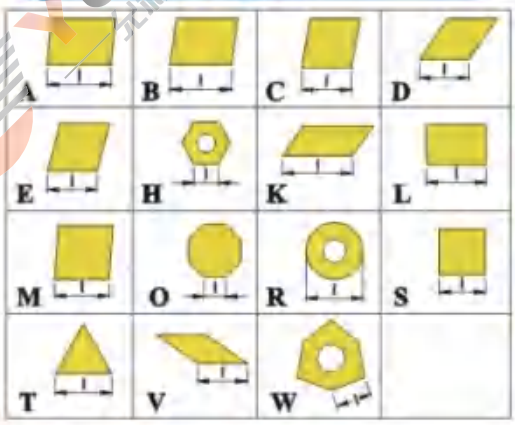

10 刀口角度 CUTTING EDGE

E	F	T	S
Rounded	Sharp	Chamferd	Chamferd and rounded

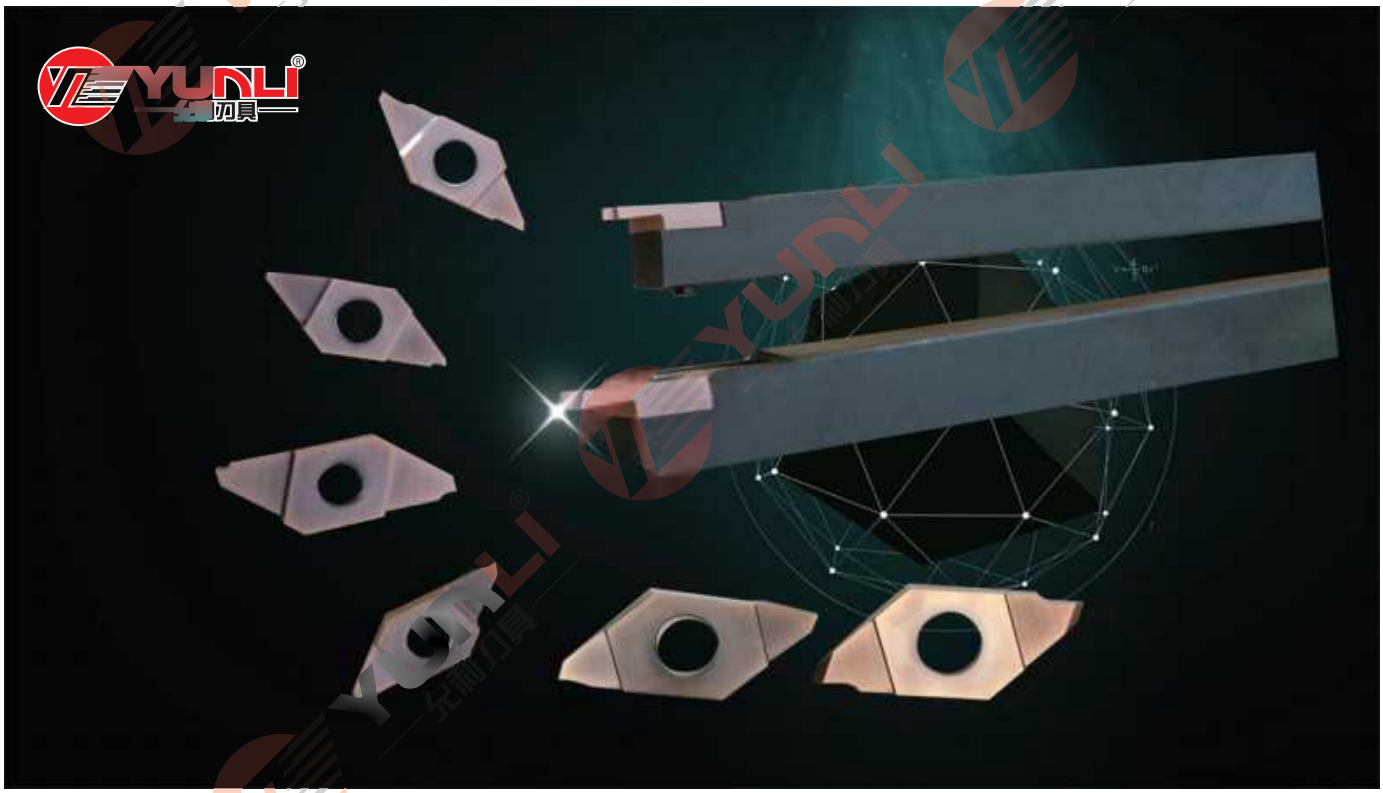

80°三角形/正角/有孔/车削刀片

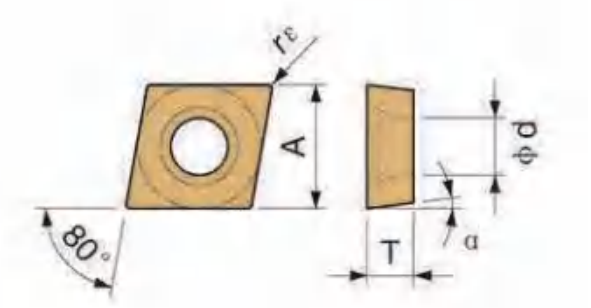

型号Type	A	T	Φd
CC**0301	2.5	1.5	1.9
CC**0401	4.3	1.8	2.3
CC**0602	6.35	2.38	2.8
CC**09T3	9.525	3.97	4.4

形状	型号	尺寸 Dimension (mm)		材质 Grade recommended			
				Uncoated grade	PVC coating		Ceramic
The basic shape of inserts	Type	a	R	YL10	YL740	YL930	YL60
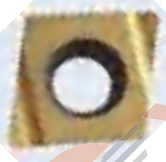	CCGT060202R/L-S	7°	0.2	●		●	○
	CCGT060204R/L-S	7°	0.4	●		●	○
	CCGT09T302R/L-S	7°	0.2	●		●	○
	CCGT09T304R/L-S	7°	0.4	●		●	○
	CCGT09T308R/L-S	7°	0.8	●		●	○
	CCGT120402R/L-S	7°	0.2	●		●	○
	CCGT120404R/L-S	7°	0.4	●		●	○
	CCGT120408R/L-S	7°	0.8	●		●	○
	CCGT0602003FR/L-U	7°	0.03	●		●	○
	CCGT0602005FR/L-U	7°	0.03	●		●	○
	CCGT060201FR/L-U	7°	0.03	●		●	○
	CCGT060202FR/L-U	7°	0.1	●		●	○
	CCGT060204FR/L-U	7°	0.2	●		●	○
	CCGT09T3005FR/L-U	7°	0.03	●		●	○
	CCGT09T301FR/L-U	7°	0.03	●		●	○
	CCGT09T302FR/L-U	7°	0.03	●		●	○
	CCGT09T304FR/L-U	7°	0.1	●		●	○
	CCET0602003R/L-U	7°	0.03	●		●	○
	CCET060201R/L-U	7°	0.1	●		●	○
	CCET060202R/L-U	7°	0.2	●		●	○

形状	型号	尺寸 Dimension (mm)		材质 Grade recommended			
				Uncoated grade	PVC coating		Ceramic
The basic shape of inserts	Type	a	R	YL10	YL740	YL930	YL60
	CCET09T3003R/L-U	7°	0.03	●		●	○
	CCET09T301R/L-U	7°	0.1	●		●	○
	CCET09T302R/L-U	7°	0.2	●		●	○
	CCGT0301005R/L-F	7°	0.05	●	●	●	○
	CCGT030101R/L-F	7°	0.1	●	●	●	○
	CCGT030102R/L-F	7°	0.2	●	●	●	○
	CCGT030104R/L-F	7°	0.4	●	●	●	○
	CCGT0401005R/L-F			●	●	●	○
	CCGT040101R/L-F	7°	0.1	●	●	●	○
	CCGT040102R/L-F	7°	0.2	●	●	●	○
	CCGT040104R/L-F	7°	0.4	●	●	●	○
	CCGT0602005R/L-F	7°	0.05	●		●	○
	CCGT060201R/L-F	7°	0.1	●		●	○
	CCGT060202R/L-F	7°	0.2	●		●	○
	CCGT060204R/L-F	7°	0.4	●		●	○
	CCGT0602005FR/L-J	7°	0.05	●		●	○
	CCGT060201FR/L-J	7°	0.1	●		●	○
	CCGT060202FR/L-J	7°	0.2	●		●	○
	CCGT060204FR/L-J	7°	0.4	●		●	○
	CCGT09T3005FR/L-J	7°	0.05	●		●	○
	CCGT09T301FR/L-J	7°	0.1	●		●	○
	CCGT09T302FR/L-J	7°	0.2	●		●	○
	CCGT09T304FR/L-J	7°	0.4	●		●	○
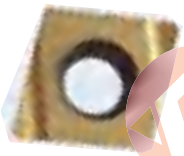	CCGT0602005R/L-W15	7°	0.05	●	●		○
	CCGT060201R/L-W15	7°	0.1	●	●		○
	CCGT060202R/L-W15	7°	0.2	●	●		○
	CCGT060204R/L-W15	7°	0.4	●	●		○

形状	型号	尺寸 Dimension (mm)		材质 Grade recommended			
				Uncoated grade	PVC coating		Ceramic
The basic shape of inserts	Type	a	R	YL10	YL740	YL930	YL60
	CCGT09T3005R/L-W20	7°	0.05	●	●		○
	CCGT09T301R/L-W20	7°	0.1	●	●		○
	CCGT09T302R/L-W20	7°	0.2	●	●		○
	CCGT09T304R/L-W20	7°	0.4	●	●		○
	CCGT0602005FR/L-J10	7°	0.05	●	●		○
	CCGT060201FR/L-J10	7°	0.1	●	●		○
	CCGT060202FR/L-J10	7°	0.2	●	●		○
	CCGT060204FR/L-J10	7°	0.4	●	●		○
	CCGT09T3005FR/L-J10	7°	0.05	●	●		○
	CCGT09T301FR/L-J10	7°	0.1	●	●		○
	CCGT09T302FR/L-J10	7°	0.2	●	●		○
	CCGT09T304FR/L-J10	7°	0.4	●	●		○
	CCGT09T3005FR/L-SN	7°	0.05	●	●		○
	CCGT09T301FR/L-SN	7°	0.1	●	●		○
	CCGT09T302FR/L-SN	7°	0.2	●	●		○
	CCGT09T304FR/L-SN	7°	0.4	●	●		○
	CCGT09T301R/L-A3	7°	0.1	●	●		○
	CCGT09T302R/L-A3	7°	0.2	●	●		○
	CCGT09T304R/L-A3	7°	0.4	●	●		○
	CCGT120402R/L-A3	7°	0.2	●	●		○
	CCGT120404R/L-A3	7°	0.4	●	●		○
	CCGT120408R/L-A3	7°	0.8	●	●		○
	CCGW060201	7°	0.1	●			○
	CCGW060202	7°	0.2	●			○
	CCGW060204	7°	0.4	●			○
	CCGW060208	7°	0.8	●			○
	CCGW09T301	7°	0.1	●			○
	CCGW09T302	7°	0.2	●			○
	CCGW09T304	7°	0.4	●			○

形状	型号	尺寸 Dimension (mm)		材质 Grade recommended			
				Uncoated grade	PVC coating		Ceramic
The basic shape of inserts	Type	a	R	YL10	YL740	YL930	YL60
	CCGT0602005MF	7°	0.05	●	●		○
	CCGT060201MF	7°	0.1	●	●		○
	CCGT060202MF	7°	0.2	●	●		○
	CCGT060204MF	7°	0.4	●	●		○
	CCGT09T3005MF	7°	0.05	●	●		○
	CCGT09T301MF	7°	0.1	●	●		○
	CCGT09T302MF	7°	0.2	●	●		○
	CCGT09T304MF	7°	0.4	●	●		○

◇ 80°三角形/正角/有孔/车削刀片

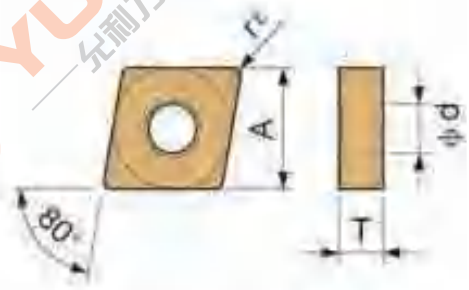

型号Type	A	T	Φd
CN**1204	12.7	4.76	5.16

形状	型号	尺寸 Dimension (mm)		材质 Grade recommended			
				Uncoated grade	PVC coating		Ceramic
The basic shape of inserts	Type	a	R	YL10	YL740	YL930	YL60
	CNGG120402R/L-S	-	0.2	●		●	○
	CNGG120404R/L-S	-	0.4	●		●	○
	CNGG120408R/L-S	-	0.8	●		●	○
	CNGG120404R/L-25R	-	0.4	●	●		○
	CNGG120408R/L-25R	-	0.8	●	●		○

55°菱角/正角/有孔/车削刀片

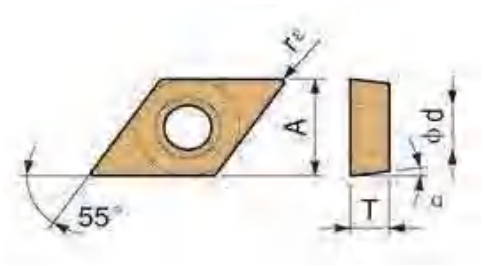

型号Type	A	T	Φd
DC**0702	6.35	2.38	2.8
DC**11T3	9.525	3.97	4.4

形状	型号	尺寸 Dimension (mm)		材质 Grade recommended			
				Uncoated grade	PVC coating		Ceramic
The basic shape of inserts	Type	a	R	YL10	YL740	YL930	YL60
	DCGT070201FR/L-J10	7°	0.1	●	●		○
	DCGT070202FR/L-J10	7°	0.2	●	●		○
	DCGT070204FR/L-J10	7°	0.4	●	●		○
	DCGT11T301FR/L-J10	7°	0.1	●	●		○
	DCGT11T302FR/L-J10	7°	0.2	●	●		○
	DCGT11T304FR/L-J10	7°	0.4	●	●		○
	DCGT070201FR/L-SN	7°	0.1	●		●	○
	DCGT070202FR/L-SN	7°	0.2	●		●	○
	DCGT070204FR/L-SN	7°	0.4	●		●	○
	DCGT11T301FR/L-SN	7°	0.1	●	●		○
	DCGT11T302FR/L-SN	7°	0.2	●	●		○
	DCGT11T304FR/L-SN	7°	0.4	●	●		○
	DCGT0702005R/L-F	7°	0.05	●		●	○
	DCGT070201R/L-F	7°	0.1	●		●	○
	DCGT070202R/L-F	7°	0.2	●		●	○
	DCGT070204R/L-F	7°	0.4	●		●	○
	DCGT11T3005R/L-F	7°	0.05	●		●	○
	DCGT11T301R/L-F	7°	0.1	●		●	○
	DCGT11T302R/L-F	7°	0.2	●		●	○
	DCGT11T304R/L-F	7°	0.4	●		●	○

形状	型号	尺寸 Dimension (mm)		材质 Grade recommended			
				Uncoated grade	PVC coating		Ceramic
The basic shape of inserts	Type	a	R	YL10	YL740	YL930	YL60
	DCGT0702005FR-U	7°	0.05	●		●	○
	DCGT070201FR-U	7°	0.1	●		●	○
	DCGT070202FR/L-U	7°	0.2	●		●	○
	DCGT070204FR/L-U	7°	0.4	●		●	○
	DCGT11T3005FR/L-U	7°	0.05	●		●	○
	DCGT11T301FR/L-U	7°	0.1	●		●	○
	DCGT11T302FR/L-U	7°	0.2	●		●	○
	DCGT11T304FR/L-U	7°	0.4	●		●	○
	DCET11T3003FR-USF	7°	0.03	●		●	○
	DCET11T3005FR-USF	7°	0.05	●		●	○
	DCET11T3003FL-USF	7°	0.03	●		●	○
	DCET11T3005FL-USF	7°	0.05	●		●	○
	DCGT070201FR/L-J	7°	0.1	●		●	○
	DCGT070202FR/L-J	7°	0.2	●		●	○
	DCGT070204FR/L-J	7°	0.4	●		●	○
	DCGT11T3005FR/L-J	7°	0.05	●		●	○
	DCGT11T301FR/L-J	7°	0.1	●		●	○
	DCGT11T302FR/L-J	7°	0.2	●		●	○
	DCGT11T304FR/L-J	7°	0.4	●		●	○
	DCGW070201	7°	0.1	●			○
	DCGW070202	7°	0.2	●			○
	DCGW070204	7°	0.4	●			○
	DCGW11T301	7°	0.1	●			○
	DCGW11T302	7°	0.2	●			○
	DCGW11T304	7°	0.4	●			○
	DCGT070201CK	7°	0.1	●		●	○
	DCGT070202CK	7°	0.2	●		●	○
	DCGT070204CK	7°	0.4	●		●	○
	DCGT11T3005CK	7°	0.05	●		●	○
	DCGT11T301CK	7°	0.1	●		●	○
	DCGT11T302CK	7°	0.2	●		●	○
	DCGT11T304CK	7°	0.4	●		●	○

形状	型号	尺寸 Dimension (mm)		材质 Grade recommended			
				Uncoated grade	PVC coating		Ceramic
The basic shape of inserts	Type	a	R	YL10	YL740	YL930	YL60
	DCGT0702005MF	7°	0.05	●		●	○
	DCGT070201MF	7°	0.1	●		●	○
	DCGT070202MF	7°	0.2	●		●	○
	DCGT070204MF	7°	0.4	●		●	○
	DCGT11T3005MF	7°	0.05	●		●	○
	DCGT11T301MF	7°	0.1	●		●	○
	DCGT11T302MF	7°	0.2	●		●	○
	DCGT11T304MF	7°	0.4	●		●	○
	DCGT11T301R/L-A3	7°	0.1	●			○
	DCGT11T302R/L-A3	7°	0.2	●			○
	DCGT11T304R/L-A3	7°	0.4	●			○
	DCGT11T301R/L-W15	7°	0.1		●		○
	DCGT11T302R/L-W15	7°	0.2		●		○
	DCGT11T304R/L-W15	7°	0.4		●		○
	DCGT11T301R/L	7°	0.1	●		●	○
	DCGT11T302R/L	7°	0.2	●		●	○
	DCGT11T304R/L	7°	0.4	●		●	○

60° 三角形/正角/有孔/车削刀片

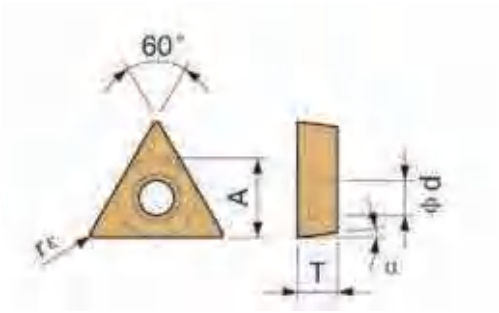

型号Type	A	T	Φd
TB**0601	3.97	1.59	2.3
TP**0802	4.76	2.38	2.3
TP**1103	6.35	3.18	3.3
TP**1603	9.525	3.97	4.4
TP**1604	12.7	4.76	5.16

形状	型号	尺寸 Dimension (mm)		材质 Grade recommended			
				Uncoated grade	PVC coating		Ceramic
The basic shape of inserts	Type	a	R	YL10	YL740	YL930	YL60
	TPGH080201R/L	11°	0.1	●		●	○
	TPGH080202R/L	11°	0.2	●		●	○
	TPGH080204R/L	11°	0.4	●		●	○
	TPGH090201R/L	11°	0.1	●		●	○
	TPGH090202R/L	11°	0.2	●		●	○
	TPGH090204R/L	11°	0.4	●		●	○
	TPGH110301R/L	11°	0.1	●	●		○
	TPGH110302R/L	11°	0.2	●	●		○
	TPGH110304R/L	11°	0.4	●	●		○
	TPGH110308R/L	11°	0.8	●		●	○
	TPGH160302R/L	11°	0.2	●		●	○
	TPGH160304R/L	11°	0.4	●		●	○
	TPGH160308R/L	11°	0.8	●		●	○
	TPEH110302FL-USF	11°	0.2	●		●	○
	TPEH110302FR-USF	11°	0.2	●		●	○

形状	型号	尺寸 Dimension (mm)		材质 Grade recommended			
				Uncoated grade	PVC coating		Ceramic
The basic shape of inserts	Type	a	R	YL10	YL740	YL930	YL60
	TPGH110302L-A3	11°	0.2	●		●	○
	TPGH110302R/L-H	11°	0.2	●		●	○
	TPGH110304R/L-H	11°	0.4	●		●	○
	TPGH160402L-H	11°	0.2	●		●	○
	TPGH160404L-H	11°	0.4	●		●	○
	TPGH160408L-H	11°	0.8	●		●	○
	TPGW080202	11°	0.2	●			○
	TPGW080202	11°	0.2	●			○
	TPGW090202	11°	0.2	●			○
	TPGW090204	11°	0.4	●			○
	TPGW110302	11°	0.2	●			○
	TPGW110304	11°	0.4	●			○

TB**0601

	TBGT060101R/L	5°	0.1	●		●	○
	TBGT060102R/L	5°	0.2	●		●	○
	TBGT060104R/L	5°	0.4	●		●	○
	TBGW060101	5°	0.1	●			○
	TBGW060102	5°	0.2	●			○
	TBGW060102	5°	0.2	●			○

60° 三角形/负角/车削刀片

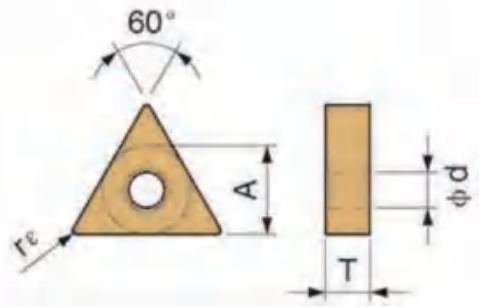

型号Type	A	T	Φd
TN**16.4	9.525	4.76	3.81

形状	型号	尺寸 Dimension (mm)		材质 Grade recommended			
				Uncoated grade	PVC coating		Ceramic
The basic shape of inserts	Type	a	R	YL10	YL740	YL930	YL60
	TNGG160402R/L-S	-	0.2	●		●	○
	TNGG160404R/L-S	-	0.4	●		●	○
	TNGG160408R/L-S	-	0.8	●		●	○
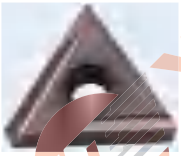	TNGG160402R/L-B	-	0.2	●		●	○
	TNGG160404R/L-B	-	0.4	●		●	○
	TNGG160408R/L-B	-	0.8	●		●	
	TNGG160402R/L-C	-	0.2	●	●	●	○
	TNGG160404R/L-C	-	0.4	●	●	●	○
	TNGG160408R/L-C	-	0.8	●	●	●	○
	TNGG160402R/L-25R	-	0.2	●	●	●	○
	TNGG160404R/L-25R	-	0.4	●	●	●	○
	TNGG160408R/L-25R		0.8	●	●	●	○
	TNGG160402R/L-P	-	0.2	●	●	●	○
	TNGG160404R/L-P	-	0.4	●	●	●	
	TNGG160408R/L-P	-	0.8	●	●	●	○
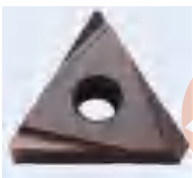	TNGG160402R/L-W	-	0.2	●		●	○
	TNGG160404R/L-W	-	0.4	●		●	○
	TNGG160408R/L-W	-	0.8	●		●	

35°菱角/正角/有孔/车削刀片

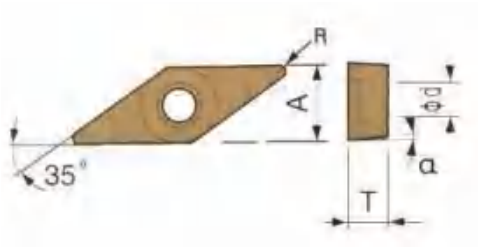

型号Type	A	T	Φd
VP**1103	6.35	3.18	2.8
VB**1103	6.35	3.18	2.8
VN**1604	9.525	4.76	4.4

形状	型号	尺寸 Dimension (mm)		材质 Grade recommended			
				Uncoated grade	PVC coating		Ceramic
The basic shape of inserts	Type	a	R	YL10	YL740	YL930	YL60
	VPGT1103005R/L-FSF	11°	0.05	●		●	○
	VPGT110301R/L-FSF	11°	0.1	●		●	○
	VPGT110302R/L-FSF	11°	0.2	●		●	○
	VPGT1103005R/L-USF	11°	0.05	●		●	○
	VPGT110301R/L-USF	11°	0.1	●		●	○
	VPGT110302R/L-USF	11°	0.2	●		●	○
	VPGT1103005-CK	11°	0.05	●		●	○
	VPGT110301-CK	11°	0.1	●		●	○
	VPGT110302-CK	11°	0.2	●		●	○
	VBGT110301FR/L-J10	5°	0.1	●	●		○
	VBGT110302FR/L-J10	5°	0.2	●	●		○
	VBGT110304FR/L-J10	5°	0.4	●	●		○
	VBGT1103005R/L-Y	5°	0.05	●		●	○
	VBGT110301R/L-Y	5°	0.1	●		●	○
	VBGT110302R/L-Y	5°	0.2	●		●	○

形状	型号	尺寸 Dimension (mm)		材质 Grade recommended			
				Uncoated grade	PVC coating		Ceramic
The basic shape of inserts	Type	a	R	YL10	YL740	YL930	YL60
	VBGT110304R/L-Y	5°	0.4	●		●	○
	VBGT110308R/L-Y	5°	0.8	●		●	○
	VBGT160402R/L-Y	5°	0.2	●		●	○
	VBGT160404R/L-Y	5°	0.4	●		●	○
	VBGT160408R/L-Y	5°	0.8	●		●	○
	VBGT1103005R/L-F	5°	0.05	●		●	○
	VBGT110301R/L-F	5°	0.1	●		●	○
	VBGT110302R/L-F	5°	0.2	●		●	○
	VBGT110304R/L-F	5°	0.4	●		●	○
	VBGT110308R/L-F	5°	0.8	●		●	○
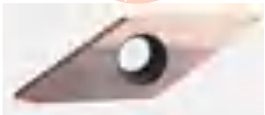	VNGG160402R/L-F	0°	0.2	●		●	○
	VNGG160404R/L-F	0°	0.4	●		●	○
	VNGG160408R/L-F	0°	0.8	●		●	○
	VNGG160402R/L	0°	0.2	●		●	○
	VNGG160404R/L	0°	0.4	●		●	○
	VNGG160408R/L	0°	0.8	●		●	○

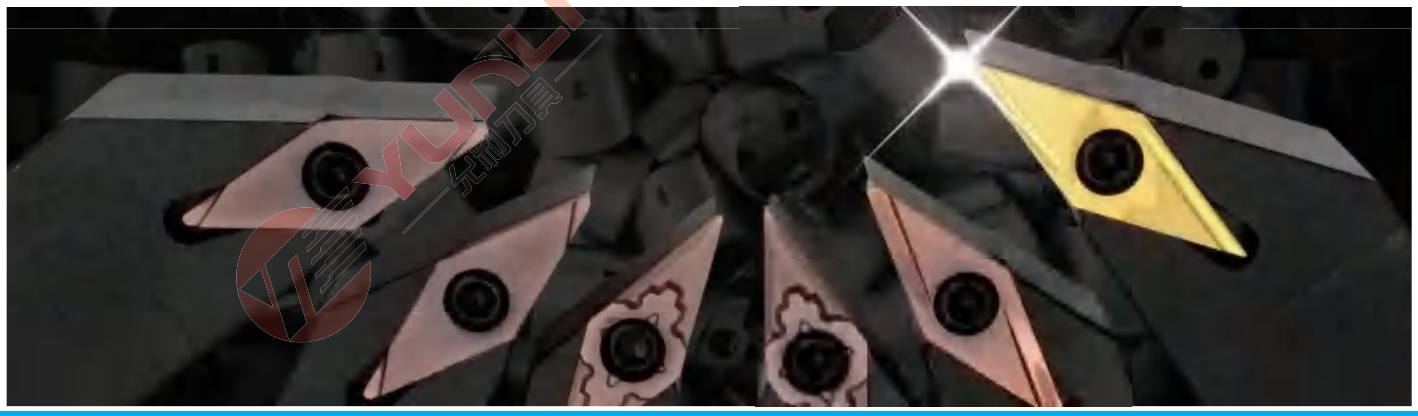

80° 六角形/负角/有孔/车削刀片

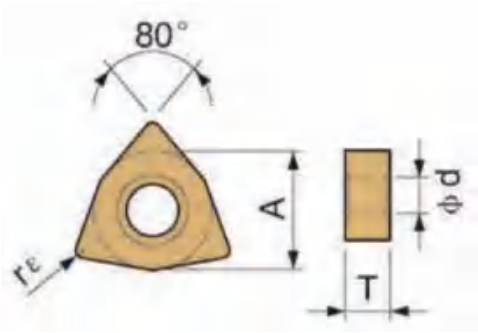

型号Type	A	T	Φd
WB**0601	3.97	1.59	2.3
WB**0802	4.76	2.38	2.3
WN**0804	12.7	4.76	5.16
SN**1204	12.7	4.76	5.16
DN**1504	12.7	4.76	5.16

形状	型号	尺寸 Dimension (mm)		材质 Grade recommended			
				Uncoated grade	PVC coating		Ceramic
The basic shape of	Type	a	R	YL10	YL740	YL930	YL60
	WBGT060102R/L-F	5°	0.2	●		●	○
	WBGT060104R/L-F	5°	0.4	●		●	○
	WBGT080202R/L-F	5°	0.2	●		●	○
	WBGT080204R/L-F	5°	0.4	●		●	○
	WNGG080402R/L-F	0°	0.2	●		●	○
	WNGG080404R/L-F	0°	0.4	●		●	○
	WNGG080408R/L-F	0°	0.8	●		●	○
	WNGG080401R/L-S	0°	0.1	●		●	○
	WNGG080402R/L-S	0°	0.2	●		●	○
	WNGG080404R/L-S	0°	0.4	●		●	○
	SNGG120404R/L-C	0°	0.4	●	●	●	○
	SNGG120404R/L-25R	0°	0.4	●	●	●	○
	SNGG120404R/L-B	0°	0.4	●	●	●	○
	DNGG150404R/L	0°	0.4	●		●	○

YUNLI 允利刀具

刀片	型号	材质 YL630	材质 YL930	材质 YL4225
	CCMT060204/8		●	
	CCMT09T304/08			
	TCMT110202/04		●	
	TCMT16T304/08			
	DCMT11T304/08		●	
	DCMT070204/08-MV		●	
	DCMT11T304/08-MV			
	VCMT160404/08		●	
	TNMG160404/08-MS		●	
	CNMG120404/08-MS		●	
	WNMG080404/08MS		●	
	VNGM160404/08-MS		●	
	TNMG160404/08-MA		●	
	CNMG120404/08-MS		●	
	WNMG080404/08MA		●	
	VNMG160404/08-MA		●	
	RPMWW1003MOE		●	
	RPMT08T2MOE-JS		●	
	RPMT10T3M0E-JS			
	RPMT1204MOE-JS			
	APMT1135PDER-H2		●	
	APMT1604PDER-H2			
	APMT1135PDER-M2			
	APMT1604PDER-M2			
	AOMT123608PEER-M		●	
	JDMW120420ZDSR FT		●	
	SOMT12T308PEER-JM		●	
	SEMT13T3AGSN-JM		●	
	SDMW1505ZDTN-R15		●	
	EPMW0603TN-8		●	
	CCMT060204/08-HMP	●		
	CCMT09T304/08-HMP			
	CCMT120404/08-HMP			
	TCMT16T304/08-HMP	●		
	TMNG160404/08R/S-S	●		
	TNMG160404/08-MA	●		
	TNMG160404/08-PF	●		
	TNMG160404/08-PM	●		
	CNMG120404/08-PM			
		●		
	CNMG120404/08-TM			
	WNMG080404/08-PM	●		

刀片	型号	材质 YL630	材质 YL930	材质 YL4225
	WNMG080404/08-TM	●		
	WNMG080404/08-MA	●		
		●		
	WNMG080404/08-HQ	●		
	APKT090308PDER-XO		●	
	APKT090320PDER-XO			
	APKT11T308PDER-39		●	
	APKT170408PDER-39			
	APKT1003PDER-M90		●	
	JDMW120420ZDSR-FT		●	
	JDMT120420ZDSR-UM		●	
	SEMT13T3AGSN-UM		●	
	WDMW080520ZTR		●	
	WPMW080615ZSR		●	
	EPMW0602TN-8		●	
	SDMW1205ZDTN-15		●	
	SDMW1505ZDTN-R15		●	
	WCMT050308R-FB		●	
	RDMW0702MOE		●	
	RDMT0802MOTN		●	
	RDMT10T3MOTN			
	RDMT1204MOTN			
	CCMT06024/08-PF		●	
	CCMT09T304/08-PF			
	TCMT16T304		●	
	TCMT16T304-HMP		●	
	DCMT070204-MV		●	
	DCMT11T304-MV			
	TNMG160404/08-PM		●	
	WNMG080404/08-PM		●	
	RDMT10T3MOTN		●	
	RDMT1604MOTN			
	EPMW0603TN-8		●	
	EDMW13T4TN-15		●	
	WDMW080520ZTR		●	
	APKT1135PDER-FT		●	
	APKT1003PDER M90		●	
	CNMG090304-PM		●	
	CNMG090308-PM			
	CNMG120404-PM			
	CNMG120408-PM			
	CNMG120412-PM			
	CNMG160608-PM			
	CNMG160612-PM			

刀片	型号	材质 YL630	材质 YL930	材质 YL4225
	CNMG190608-PM			●
	CNMG190612-PM			●
	CNMG190616-PM			●
	DNMG110404-PM			●
	DNMG110408-PM			●
	DNMG150404-PM			●
	DNMG150408-PM			●
	DNMG150412-PM			●
	DNMG150604-PM			●
	DNMG150608 PM			●
	DNMG150612-PM			●
	SNMG090304-PM			●
	SNMG120404-PM			●
	SNMG120408-PM			●
	SNMG120412-PM			●
	SNMG150608-PM			●
	SNMG150612-PM			●
	SNMG190608-PM			●
	SNMG190612-PM			●
	SNMG190616-PM			●
	TNMG160404-PM			●
	TNMG160408-PM			●
	TNMG160412-PM			●
	TNMG220404-PM			●
	TNMG220408-PM			●
	TNMG220412-PM			●
	VNMG160404-PM			●
	VNMG160408-PM			●
	VNMG160412-PM			●
	WNMG061404-PM			●
	WNMG060408-PM			●
	WNMG060412-PM			●
	WNMG081404-PM			●
	WNMG080408-PM			●
	WNMG080412-PM			●
	CNMG120404-MA			●
	CNMG120408-MA			●
	CNMG120412-MA			●
	CNMG160604-MA			●
	CNMG160608-MA			●
	DNMG150404-MA			●
	DNMG150408-MA			●
	DNMG150604-MA			●
	DNMG150608-MA			●
	SNMG120404 MA			●
	SNMG120408-MA			●
	TNMG160404-TM			●
	TNMG160408-TM			●
	TNMG160412-TM			●
	VNMG160404-TM			●
	VNMG160408-TM			●
	WNMG80404-TM			●
	WNMG80408-TM			●
	CNMG120404-TM			●
	CNMG120408-TM			●
	CNMG120412-TM			●
	DNMG150404-TM			●
	DNMG150408-TM			●
	DNMG150412-TM			●
	DNMG150604-TM			●
	DNMG150608-TM			●
	DNMG150612-TM			●
	TNMG160404-TM			●
	TNMG160408-TM			●
	TNMG160412-TM			●
	TNMG220404-TM			●
	TNMG220408-TM			●
	TNMG220412-TM			●
	VNMG160406-TM			●
	VNMG160408-TM			●

刀片	型号	材质 YL630	材质 YL930	材质 YL4225
	VNMG160412-TM			●
	WNMG80404-TM			●
	WNMG80408-TM			●
	WNMG80412-TM			●
	VNMG160408-UX			●
	VNMG160412-UX			●
	WNMG80408-UX			●
	WNMG80412-UX			●
	CNMG120404-MS			●
	CNMG120408-MS			●
	CNMG120412-MS			●
	CNMG160604-MS			●
	CNMG160608-MS			●
	CNMG160612-MS			●
	DNMG150404-MS			●
	DNMG150408-MS			●
	DNMG150604-MS			●
	DNMG150608-MS			●
	SNMG120404-MS			●
	SNMG120408-MS			●
	SNMG150608-MS			●
	SNMG150612-MS			●
	TNMG160404-MS			●
	TNMG160408-MS			●
	TNMG160412-MS			●
	VNMG1160404-MS			●
	VNMG1160408-MS			●
	VNMG1160412-MS			●
	WNMG80404-MS			●
	WNMG80408 MS			●
	WNMG80412 MS			●
	CNMG90304-PF			●
	CNMG90308-PF			●
	CNMG120404-PF			●
	CNMG120408-PF			●
	CNMG120412-PF			●
	DNMG110404-PF			●
	DNMG110408-PF			●
	DNMG150404-PF			●
	DNMG150408-PF			●
	DNMG150604-PF			●
	DNMG150608-PF			●
	DNMG150612-PF			●
	SNMG120404-PF			●
	SNMG120408-PF			●
	SNMG120412-PF			●
	TNMG160404-PF			●
	TNMG160408-PF			●
	TNMG160412-PF			●
	TNMG220404-PF			●
	TNMG220408-PF			●
	VNMG160404-PF			●
	VNMG160408-PF			●
	WNMG60404-PF			●
	WNMG60408-PF			●
	WNMG60412-PF			●
	WNMG80404-PF			●
	WNMG80408-PF			●
	WNMG80412-PF			●
	CCMT060202-PF			●
	CCMT060204-PF			●
	CCMT060208-PF			●
	CCMT09T302-PF			●
	CCMT09T304-PF			●
	CCMT09T308-PF			●
	CCMT120404-PF			●
	CCMT120408-PF			●
	DCMT70202-PF			●
	DCMT70204-PF			●

YUNLI 允利刀具

刀片	型号	材质		
		YL10	YL930	YL740
	CCGT060202-AK	●		
	CCGT060204-AK	●		
	CCGT060208-AK	●		
	CCGT09T302-AK	●		
	CCGT09T304-AK	●		
	CCGT09T308-AK	●		
	CCGT120402-AK	●		
	CCGT120404-AK	●		
	CCGT120408-AK	●		
	DCGT070202-AK	●		
	DCGT070204-AK	●		
	DCGT070208-AK	●		
	DCGT11T302-AK	●		
	DCGT11T304-AK	●		
	DCGT11T308-AK	●		
	DCGT11T312-AK	●		
	SCGT09T302-AK	●		
	SCGT09T304-AK	●		
	SCGT09T308 AK	●		
	SCGT120402-AK	●		
	SCGT120404-AK	●		
	SCGT120408-AK	●		
	SCGT120412-AK	●		
	SCGT120416-AK	●		
	TCGT090202-AK	●		
	TCGT090204-AK	●		
	TCGT090208-AK	●		
	TCGT110202-AK	●		
	TCGT110204-AK	●		
	TCGT110208-AK	●		
	TCGT16T302-AK	●		
	TCGT16T304-AK	●		
	TCGT16T308-AK	●		
	TCGT16T312-AK	●		

刀片	型号	材质		
		YL10	YL930	YL740
	VBGT110302-AK	●		
	VBGT110304-AK	●		
	VBGT110308-AK	●		
	VBGT160402-AK	●		
	VBGT160404-AK	●		
	VBGT160408-AK	●		
	VBGT160412-AK	●		
	VBGT160416-AK	●		
	VBGT220516-AK	●		
	VBGT220525-AK	●		
	VBGT220530-AK	●		
	VCGT110302-AK	●		
	VCGT110304-AK	●		
	VCGT110308-AK	●		
	VCGT130302-AK	●		
	VCGT130304-AK	●		
	VCGT160402-AK	●		
	VCGT160404-AK	●		
	VCGT160408-AK	●		
	VCGT160412-AK	●		
	VCGT220520-AK	●		
	VCGT220530-AK	●		
	RCGT0602MO-AK	●		
	RCGT0803MO-AK	●		
	RCGT1003MO-AK	●		
	RCGT10T3MO-AK	●		
	RCGT1204MO-AK	●		
	HFPR3003	●		
	HFPR4004	●		
	TCGT090202-AK	●		
	TCGT090204-AK	●		
	TCGT090208-AK	●		

刀片	型号	材质		
		YL10	YL930	YL740
	VCGT110302-AK	●		
	VCGT110304-AK	●		
	VCGT110308-AK	●		
	VCGT130302-AK	●		
	VCGT130304-AK	●		
	VCGT160402 AK	●		
	VCGT160404-AK	●		
	VCGT160408-AK	●		
	CNMG120402-HA	●		
	CNMG120404-HA	●		
	CNMG120408-HA	●		
	CNMG120412-HA	●		
	DNMG150404-HA	●		
	DNMG150408-HA	●		
	DNMG150604-HA	●		
	DNMG150608-HA	●		
	SNMG120404-HA	●		
	SNMG120408-HA	●		
	SNMG120412-HA	●		
	TNMG160404-HA	●		
	TNMG160408-HA	●		
	TNMG160412-HA	●		
	TNMG220408-HA	●		
	TNMG220412-HA	●		
	VNMG160404-HA	●		
	VNMG160408-HA	●		
	WNMG060404-HA	●		
	WNMG060408-HA	●		
	WNMG080404-HA	●		
	WNMG080408-HA	●		
	WNMG080412-HA	●		

刀片	型号	材质		
		YL10	YL930	YL740
	CNGG120402-HA	●		
	CNGG120404-HA	●		
	CNGG120408-HA	●		
	CNGG120412-HA	●		
	DNGG150404-HA	●		
	DNGG150408-HA	●		
	DNGG150604-HA	●		
	DNGG150608-HA	●		
	SNGG120404-HA	●		
	SNGG120408-HA	●		
	SNGG120412-HA	●		
	TNGG160404-HA	●		
	TNGG160408-HA	●		
	TNGG160412-HA	●		
	TNGG220408-HA	●		
	TNGG220412-HA	●		
	NGG160401 HA	●		
	NGG160402-HA	●		
	NGG160404-HA	●		
	NGG160408-HA	●		
	WNGG060404-HA	●		
	WNGG060408-HA	●		
	WNGG080404-HA	●		
	WNGG080408-HA	●		
	WNGG080412-HA	●		
	APGT1135PDFR-G2	●		
	APGT1604PDER-G2	●		
	APKT1604PDER-MA3	●		
	SEKT1204AFFN-AK	●		
	SDHT1204AEFN-AK	●		
	GIDA8.0-4.0	●		
	GIPA8.0-4.0	●		
	GIPA6.0-3.0	●		
	GIPA4.0-2.0	●		
	GIPA3.0-2.0	●		
	GIPA4.0-0.4	●		

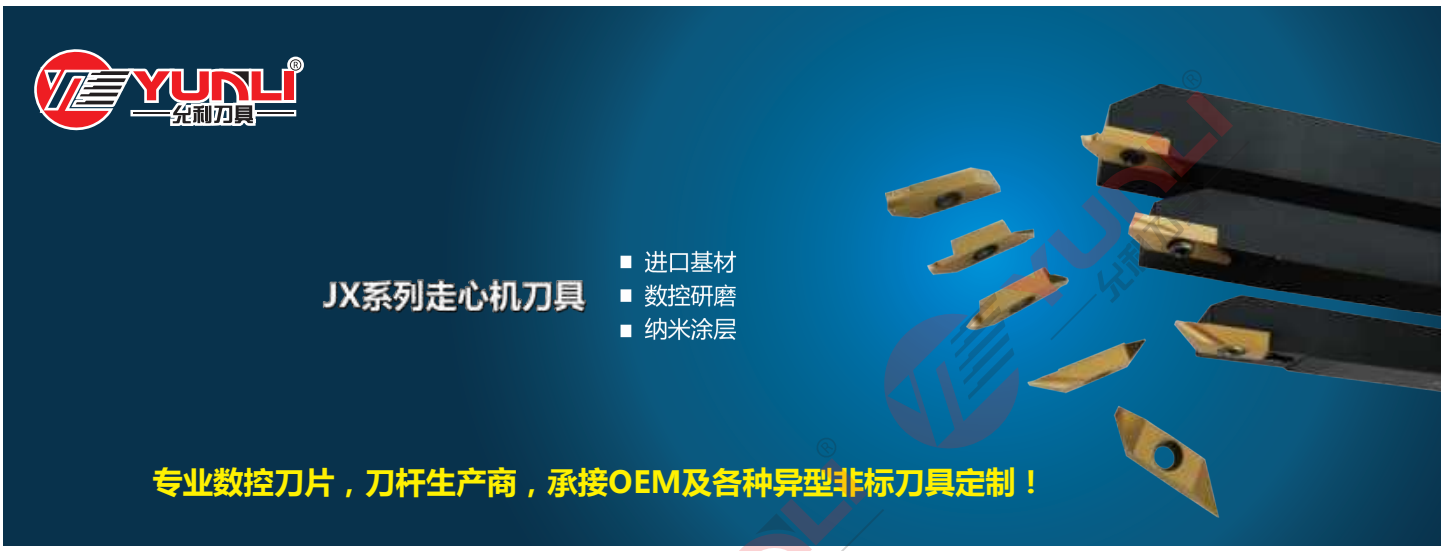

ABS/ABW 后扫刀片

形状		型号	刀尖角R（rε）：mm	最大切深	材质		
					YL10	YL930	YL740
		ABS15R4005	0.05	4.20	●	●	○
		ABS15R4010	0.10		●	●	○
		ABS15R4015	0.15		●	●	○
		ABS15R4005M	<0.05		●	●	○
		ABS15R4015M	<0.15		●	●	○
	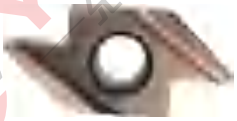	ABW15R4005	0.05	4.20	●	●	○
		ABW15R4010	0.10		●	●	○
		ABW15R4015	0.15		●	●	○
		ABW15R4005M	<0.05		●	●	○
		ABW15R4015M	<0.15		●	●	○
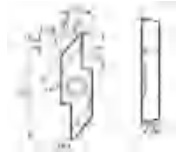		ABW23R5005	0.05		●	●	○
		ABW23R5015	0.15		●	●	○
		ABW23R5005M	<0.05		●	●	○
		ABW23R5015M	<0.15		●	●	○

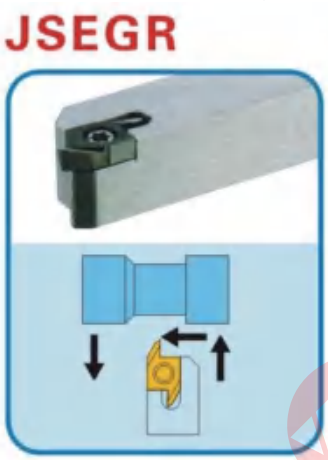

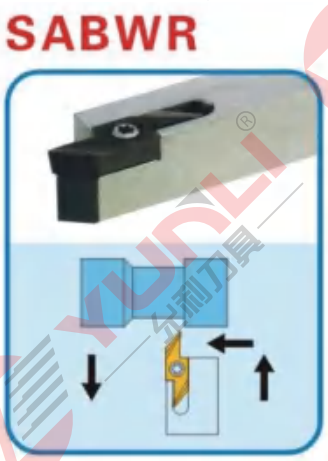

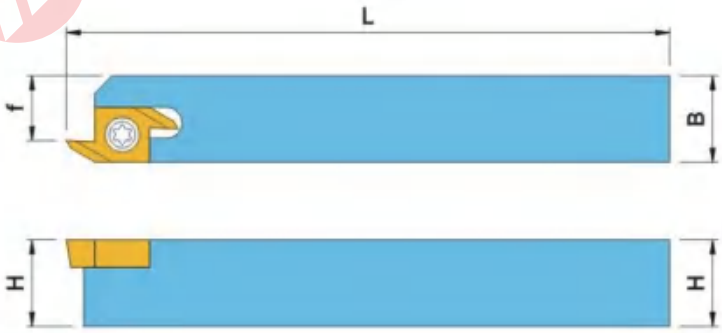

YUNLI 允利刀具

型号			尺寸(mm)					标准刀尖	零件				库存	
			H	B	L	L2	f	角R（rε）	锚形杆梢	锁紧螺钉	紧固螺钉	扳手	R	L
	AABSR	1010JX-40F	10	10	120	-	10.2	0.15	LPA-11	HSB4X8R	-	FH-2	●	○
		1212JX-40F	12	12			12.2		LPA-13				●	○
		1616JX-40F	16	16			16.2		LPA-17				●	○
	SABSR	1010JX-40F	10	10	120	-	10.2	0.15	-	-	SB-3080TR	FT-10	●	○
		1212JX-40F	12	12			12.2						●	○
		1616JX-40F	16	16			16.2						●	○
		1212F-40F	12	12	85	-	12.2	0.15	-	-	SB-3080TR	FT-10	●	○
		2020K-40F	20	20	120		20.2						●	○
		2525M-40F	25	25	150	-	25.2	0.15	-	-	SB-3080TR	FT-10	●	○
	AABWR	1010JX-40F	10	10	120	-	10.2	0.15	LPA-11	HSB4X8R	-	FH-2	●	○
		1212JX-40F	12	12	120		12.2	0.15	LPA-13				●	○
		1616JX-40F	16	16	120		16.2	0.15	LPA-17				●	○
	SABWR	1010JX-40F	10	10	120	-	10.2	0.15	-	-	SB-3080TR	FT-10	●	○
		1212JX-40F	12	12	120		12.2	0.15					●	○
		1616JX-40F	16	16	120		16.2	0.15					●	○
		2020K-40F	20	20	125	-	20.2	0.15	-	-	SB-3080TR	FT-10	●	○
		2525M-40F	25	25	150	-	25.2	0.15	-	-	SB-3080TR	FT-10	●	○
	AABWR	1010JX-50F	10	10	120	-	10.2	0.15	LPA-11	HSB4X8R	-	FH-2	●	○
		1212JX-50F	12	12			12.2	0.15	LPA-13				●	○
		1616JX-50F	16	16			16.2	0.15	LPA-17				●	○
	SABWR	1010JX-50F	10	10	120	-	10.2	0.15	-	-	SB-3080TR	FT-10	●	○
		1212JX-50F	12	12			12.2	0.15					●	○
		1616JX-50F	16	16			16.2	0.15					●	○
		2020k-50F	20	20	125	-	20.2	0.15	-	-	SB-3080TR	FT-10	●	○
		2525M-50F	25	25	150	-	25.2	0.15	-	-	SB-3080TR	FT-10	●	○
	SABSSL	1010JX-40F	10	10	120	14.2	10.2	0.15	-	-	SB-3080TR	FT-10	○	●
		1212JX-40F	12	12		16.2	12.2						○	●
		1616JX-40F	16	16		20.2	16.2						○	●
		2020K-40F	20	20	120	24.2	20.2						○	●
		2525M-40F	25	25	150	29.2	25.2	0.15	-	-	SB-3080TR	FT-10	○	●
	SABWSL	1010JX-40F	10	10	120	14.2	10.2	0.15	-	-	SB-3080TR	FT-10	○	●
		1212JX-40F	12	12	120	16.2	12.2	0.15					○	●
		1616JX-40F	16	16	120	20.2	16.2	0.15					○	●
		2020K-40F	20	20	125	24.2	20.2	0.15	-	-	SB-3080TR	FT-10	○	●
		2525M-40F	25	25	150	29.2	25.2	0.15	-	-	SB-3080TR	FT-10	○	●
	SABWSL	1010JX-50F	10	10	120	18.3	10.2	0.15	-	-	SB-3080TR	FT-10	○	●
		1212JX-50F	12	12		20.3	12.2	0.15					○	●
		1616JX-50F	16	16		24.3	16.2	0.15					○	●
		2020K-50F	20	20	125	28.3	20.2	0.15	-	-	SB-3080TR	FT-10	○	●
		2525M-50F	25	25	150	33.3	25.2	0.15	-	-	SB-3080TR	FT-10	○	●

JTBR/L型 刀片

形状	型号	尺寸				库存		
		Ød	T	r ε	最大切深	YL10	YL930	YL740
	JTBR/L3000F	9.438	3.18	0.03	2.5	●		●
	JXBR/L3005F			0.05		●		●
	JTBR/L3010F			0.1		●		●
	JTBR/L3015F			0.15		●		●

形状	型号	尺寸				库存		
		Ød	T	r ε	最大切深	YL10	YL930	YL740
	JTBR/L3005	9.438	3.18	0.05	2.5	●		●
	JTBR/L3010			0.1		●		●
	JTBR/L3015			0.15		●		●

形状	型号	尺寸							使用刀片	紧固螺钉	扳手		库存	
		h	b	L1	L2	h1	f	C					R	L
	JSTBR/L1010K3	10	10	125	15	10	6	5	JTBR/L3□□□B□	CSTB-4S	T-8F	(T-8L)	●	○
	JSTBR/L1212K3	12	12	125	15	12	8	3					●	○
	JSTBR/L1616K3	16	16	125	15	16	12	–					●	○

形状	型号	尺寸						使用刀片	紧固螺钉	扳手	库存	
		ØDs	f	L1	L2	h	B				R	L
	JS19K-TBL3	19.05	6	125	–	18	11.5	JTBR3□□□B□	CSTB-4S	T-15F	●	○
	JS20K-TBL3	20				19					●	○
	JS22K-TBL3	22				21					●	○
	JS25K-TBL3	25.4	10			24	12.7				●	○

J10ER型 刀片

形状	型号	尺寸(mm)				库存		
		Ød	T	r ε	最大切深	YL10	YL930	YL740
	J10ER/L005B	6.35	3.18	0.05	3	●		●
	J10ER/L010B			0.1		●		●
	J10ER/L015B			0.15		●		●

形状	型号	尺寸(mm)						使用刀片	紧固螺钉	扳手		库存	
		h	b	L1	L2	h1	f					R	L
	JSEGR/L1010K10	10	10	125	3.3	10	7.5	J10ER/□□□B□	CSTB-2.5	T-8F	(T-8L)	●	○
	JSEGR/L1212K10	12	12	125	3.3	12	9.5					●	○
	JSEGR/L1616K10	16	16	125	3.3	16	13.5					●	○

TKFT/JXRR/TBP

TKFT/JXRR/TBP型号详细参数请参照切断切槽系列H5 /H6 /H11页。

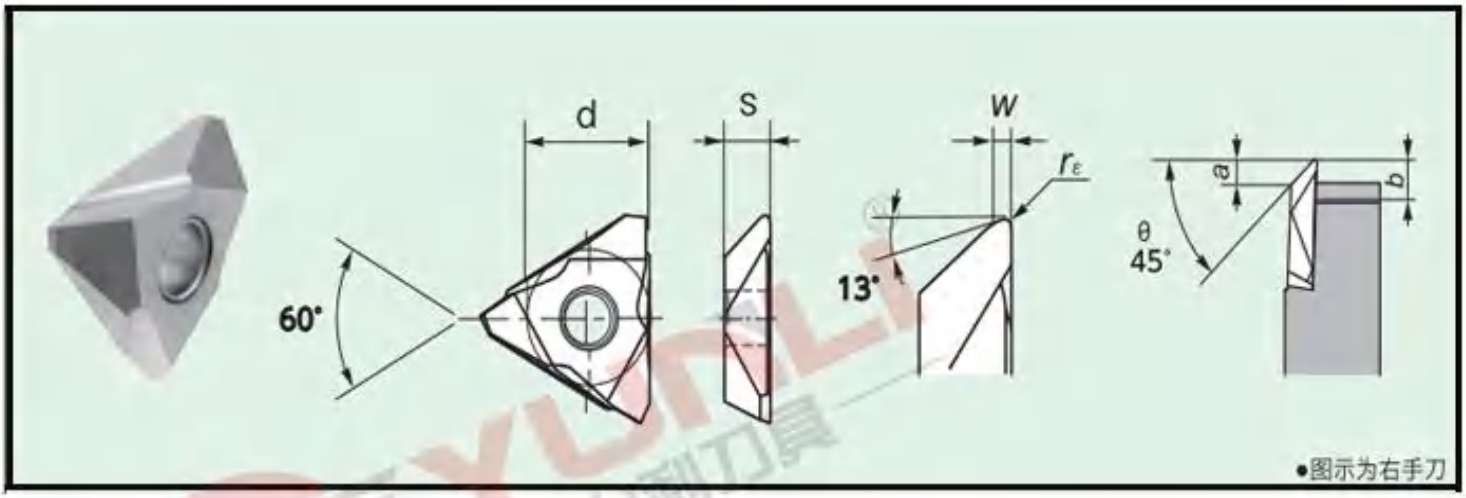

TB3200R/L后扫刀片

刀片型号		尺寸 (mm)						PVD涂层微粒子硬质合金		
		有效切刃长 a	可加工深度 b	r_ε	w	d	s	YL10	YL740	YL930
TB	3200R/L	2.7	5.0	0.00	0.5	9.525	3.18	●	●	○
	3205R/L	2.7	5.0	0.05	0.5	9.525	3.18	●	●	○
	3215R/L	2.7	5.0	0.15	0.5	9.525	3.18	●	●	○
	3220R/L	2.7	5.0	0.20	0.5	9.525	3.18	●	●	○
	4305R/L	4.0	5.0~9.0	0.05	1.0	12.70	4.76	●	●	○
	4315R/L	4.0	5.0~9.0	0.15	1.0	12.70	4.76	●	●	○
	4340R/L	3.9	5.0~9.0	0.40	1.0	12.70	4.76	●	●	○

TBVC型

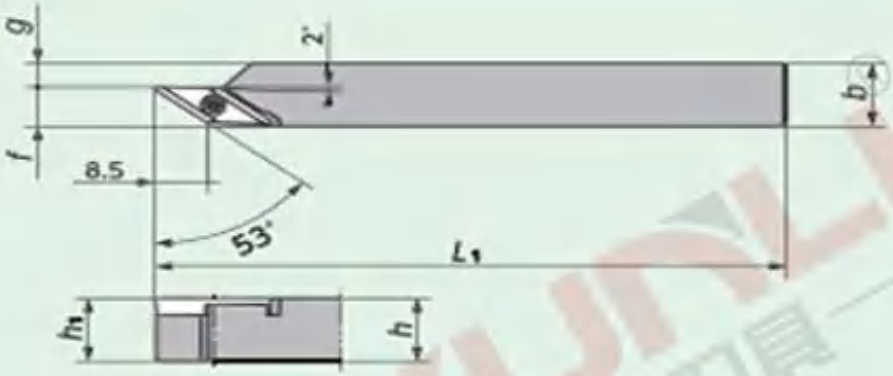

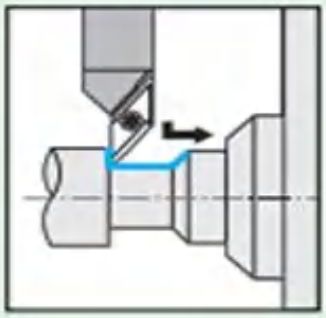

●图示为右手刀

TBVCR/L后扫刀杆

刀杆形状	刀杆型号		库存 R	库存 L	尺寸(mm) h	b	L_1	h_1	f	g	适用刀片	零部件 紧固螺丝	零部件 扳手
	TBVCR/L	10	●		10	10	120	10	7.5	2.5	TBVC VCGT1103	M2.5*7	T8
		12	●		12	12	120	12	7.5	4.5			
		16	●		16	16	120	16	7.5	8.5			
	TBVCR/L	10 -F10	●		10	10	120	10	10	0			
		12GX-F10	●		12	12	85	12	10	2			
		12 -F10	●		12	12	120	12	10	2			
		16H-F10	●		16	16	100	16	10	6			
		16 -F10	●		16	16	120	16	10	6			
		20F-F10	●		20	20	80	20	10	10			

BTR35后扫刀片

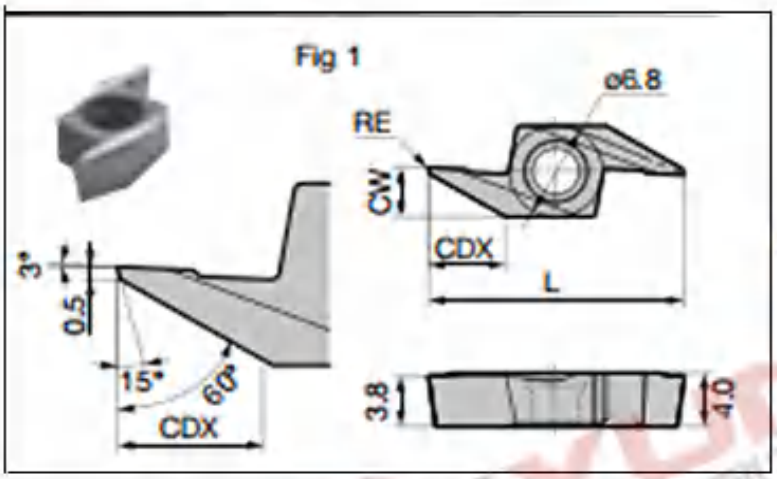

型　号	全长 L	最大加工深度 CDX	刃宽 CW	刀尖半径 RE	适用刀杆	Fig	YL10	YL740	YL930
BT R3505	15	3.5	2.5	0.05	SBT35R○○○○	1	●	●	●
BT R3515	15	3.5	2.5	0.15	PBT35R○○○○	1	●	●	●
BT R5505	19	5.5	3.7	0.05	PBT55R○○○○	1	●	●	●
BT R5515	19	5.5	3.7	0.15		1	●	●	●
BT R8005	24	8.0	5.2	0.05	PBT80R○○○○	1	●	●	●
BT R8015	24	8.0	5.2	0.15		1	●	●	●

SBT35R后扫刀杆

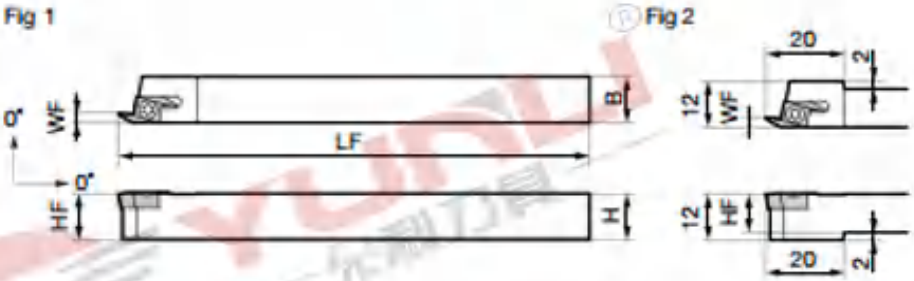

型　号	高度 H	宽度 B	全长 LF	刀头距离 WF	刀头高度 HF	适用刀片	Fig
SBT35 R1010	10	10	120	2.5	10	BTR35○○	2
SBT35 R1212	12	12	120	2.5	12		1
SBT35 R1616	16	16	120	2.5	16		1
SBT35 R2020	20	20	125	2.5	20		1

MAF MAB背车前扫、后扫刀片

	车削 **MAFR/L**	背车 **MABR/L**
主偏角	κ_r 90°	κ_r 59°
导角	0°	31°

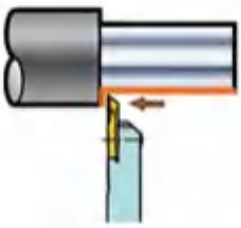

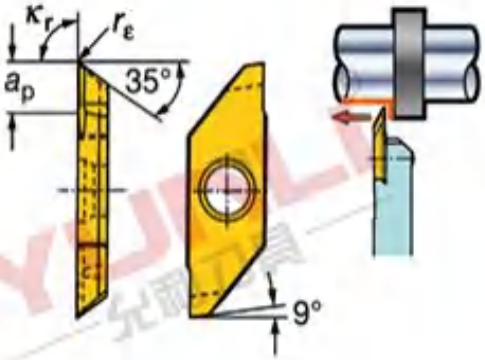

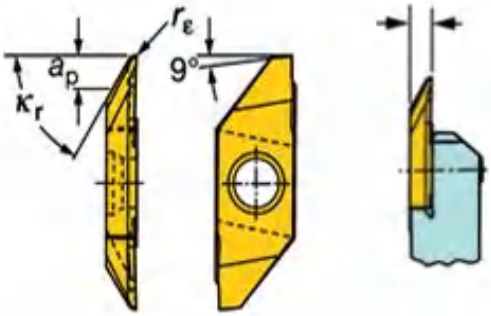

刀片尺寸

	选择标准，毫米，英寸（mm，in.）								
	r_ε mm	r_ε in.	Max a_p mm	Max a_p in.	刀片座尺寸 [1]	型号	YL10	YL740	YL930
 MAF	0.03	.001	4	.157	3	MAFR/L 3 003	●	●	○
	0.05	.002	4	.157		MAFR/L 3 005	●	●	○
	0.10	.004	4	.157		MAFR/L 3 010	●	●	○
	0.20	.008	4	.157		MAFR/L 3 020	●	●	○
 MAB	0.03	.001	4	.157	3	MABR/L 3 003	●	●	○
	0.05	.002	4	.157		MABR/L 3 005	●	●	○
	0.10	.004	4	.157		MABR/L 3 010	●	●	○
	0.20	.008	4	.157		MABR/L 3 020	●	●	○

SCLC-FF 型(无偏头)(外径车削 / 端面加工)

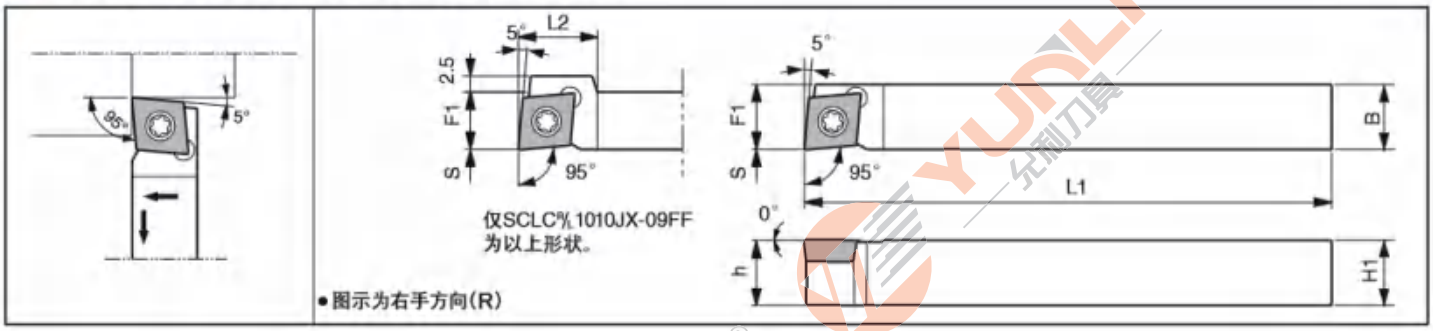

SCLC

形状	型号		尺寸(mm)						标准刀尖角R（rε）	库存	
			H1=h	B	L1	L2	F1	S		R	L
	SCLCR/L	0808F 06FF	8	8	85	-	8	0	0.2	●	●
		1212F-09FF	12	12			12			●	●
	SCLCR/L	1010JX 06FF	10	10	120	-	10	0	0.2	●	●
		1010JX-09FF	10	10		15	10		0.2	●	●
		1212JX-09FF	12	12		-	12			●	●
		1616JX-09FF	16	16			16			●	●
	SCLCR/L	1010F-06	10	10	80	9	12	-	0.2	●	●
		1010F-09	10	10	80	14	14		0.2	●	●
		1212H-09	12	12	100		16		0.2	●	●
		1616H-09	16	16	100	15	20		0.2	●	●
		2020K-09	20	20	125	20	25		0.2	●	●
		2525M-09	25	25	150	22	32		0.2	●	●
		1616H-12	16	16	100	20	20		0.4	●	●
		2020K-12	20	20	125	22	25		0.4	●	●
		2525M-12	25	25	150	22	32		0.4	●	●
	SDJCR/L	1010F-07	10	10	80	12	12	-	0.2	●	●
		1010F-11	10	10	80	18	12		0.2	●	●
		1212H-11	12	12	100	18	16		0.2	●	●
		1616H-11	16	16	100	18	20		0.2	●	●
		2020K-11	20	20	125	18	25		0.2	●	●
		2525M-11	25	25	150	23	32		0.2	●	●

- S-KTGFL16（移至槽刀） 详细参数请转到 切断切槽H05-H06页
- S-KTTXL16（移至螺纹刀）详细参数请转到 螺纹刀具N03页

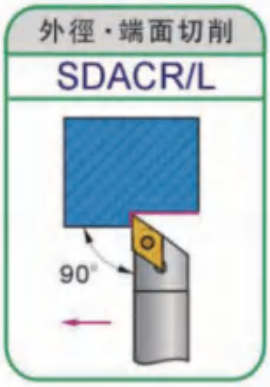

SCAC

形状	型号	适用刀片	尺寸（mm）						紧固螺丝	扳手
			h	b	L	L1	h1	f		
	SCACR/L0808K06	CC££0602££	8	8	125	10	8	8	M2.5×7	T8
	SCACR/L1010K06		10	10			10	10		
	SCACR/L1212K09	CC££09T3££	12	12	125	10	12	12	M4×10	T15
	SCACR/L1616K09		16	16			16	16		

SDJC-FF 型（无偏头）（外径车削 / 仿形加工）

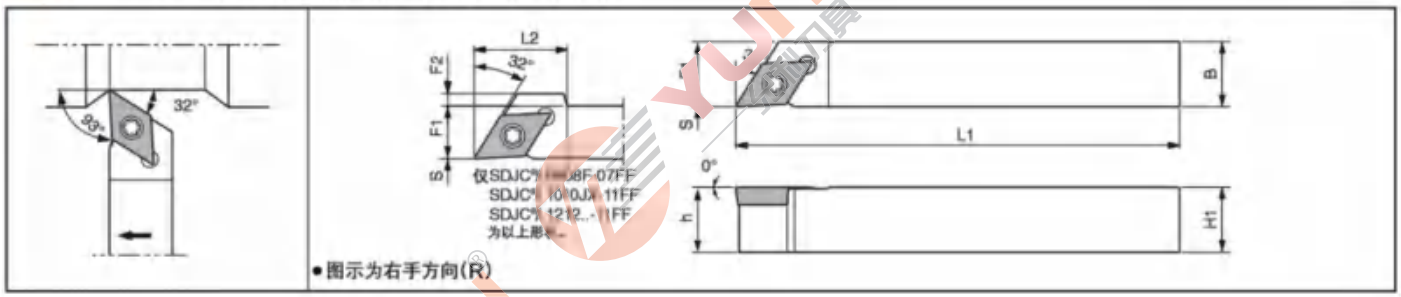

SDLC-FF 型（无偏头）（外径车削 / 仿形加工）

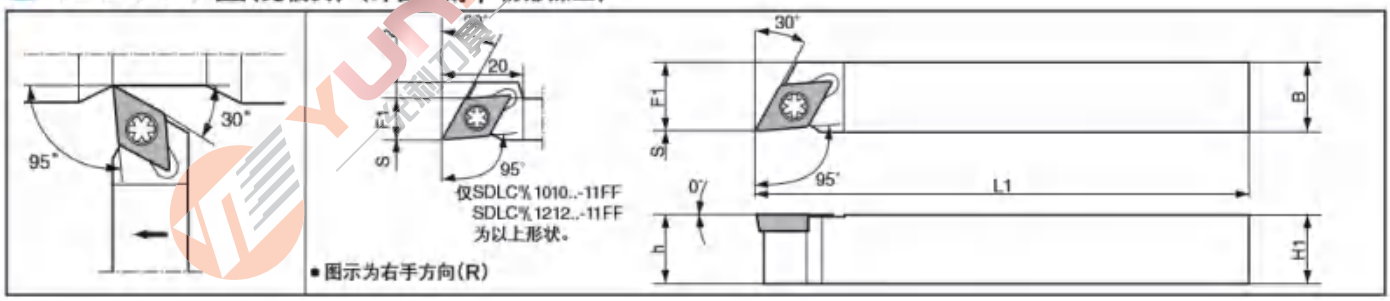

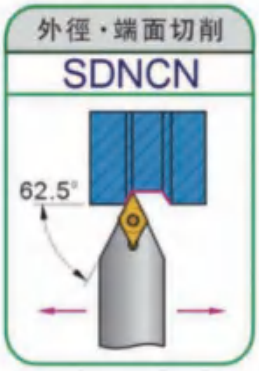

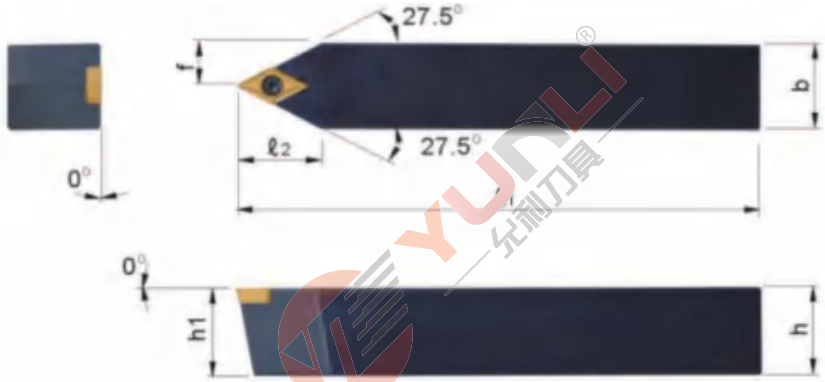

SDJC SDJCR SDLC SDNCN

形状	型号		尺寸(mm)							标准刀尖角R（rε	零件		库存	
			H1=h	B	L1	L2	F1	F2	S		紧固螺钉	扳手	R	L
	SDJCR/L	0808F-07FF	8	8	85	14	8	0.5	0	0.2	SB-2570TR	FT-8	●	●
		1010F-07FF	10	10		16	10	0.8			SB-2570TR	FT-8	●	●
		1212F-11FF	12	12		20	12	1			SB-4085TR	FT-15	●	●
		1010JX-07FF	10	10	120		10	–	0	0.2	SB-2570TR	FT-8	●	●
		1010JX-11FF	10	10		20	10	3		0.2	SB-4085TR	FT-15	●	●
		1212JX-11FF	12	12			12	1					●	●
		1616JX-11FF	16	16		–	16	–					●	●
		1010F-07	10	10	80	12	12	-	-	0.2	SB-2570TR	FT-8	●	●
		1212H-07	-	-	-	18	-				-		●	●
		1616H-07											●	●
		1010F-11	10	10	80		12				SB-4085TR	FT-15	●	●
		1212H-11	12	12	100		16						●	●
		1616H-11	16	16	100		20						●	●
		2020K-11	20	20	125		25						●	●
		2525M-11	25	25	150	23	32						●	●
	SDJCR	1216JX-11-F05	12	16	120	12.6	18	2	5	0.2	SB-4085TR	FT-15	●	●
		1216JX-11-F15					28	12	15				●	●
		1620JX-11-F05	16	20			20	–	5				●	●
		1620JX-11-F15					28	8	15				●	●
	SDLCR/L	1010JX-07FF	10	10	120	-	10	–	0	0.2	SB-2570TR	FT-8	●	●
		1212JX-07FF	12	12	120		12		0	0.2			●	●
		1616JX-07FF	16	16	120		16		0	0.2			●	●
		1010JX-11FF	10	10	120	-	10	4	0	0.2	SB-4085TR	FT-15	●	●
		1212JX-11FF	12	12			12	2	0	0.2			●	●
		1616JX-11FF	16	16			16	–	0	0.2			●	●
		1212F-07FF	12	12	85	-	12	–	0	0.2	SB-2570TR	FT-8	●	●
		1010F-11FF	10	10	80		10	4	0	0.2	SB-4085TR	FT-15	●	●
		1212F-11FF	12	12	85		12	2	0	0.2			●	●
		1616H-11FF	16	16	100		16	–	0	0.2			●	●
		1010JX-07F	10	10	120	-	7	10.5		0.2	SB-2570TR	FT-8	●	●
	SDNCN	1010JX-07	10	10	120	-	5	-	-	0.2	SB-2570TR	FT-8	●	●
		1212JX-07	12	12	120		6			0.2			●	●
		1010JX-11	10	10	120		5			0.2	SB-4085TR	FT-15	●	●
		1212JX 11	12	12	120		6			0.2			●	●
		1616JX-11	16	16	120		8			0.2			●	●
		0808F-07F	8	8	85	-	4	-	-	0.2	SB-2570TR	FT-8	●	●
		1010F-11	10	10	80		5			0.2	SB-4085TR	FT-15	●	●
		1212F-11	12	12	85		6			0.2			●	●
		1616H-11	16	16	100		8			0.2			●	●
		2525M-11	-	-	-		-			-	-	-	●	●

SVJP-FF 型（无偏头）（外径车削 / 仿形加工）

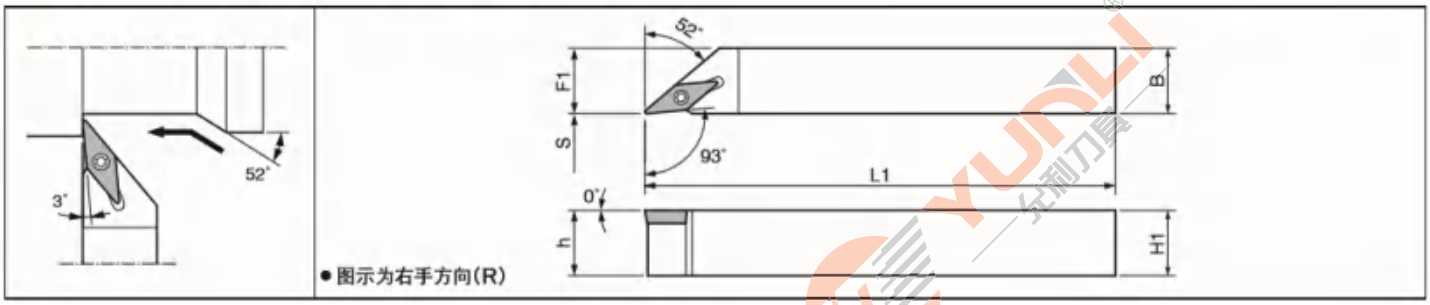

SVLP-FF 型（无偏头）（外径车削 / 仿形加工）

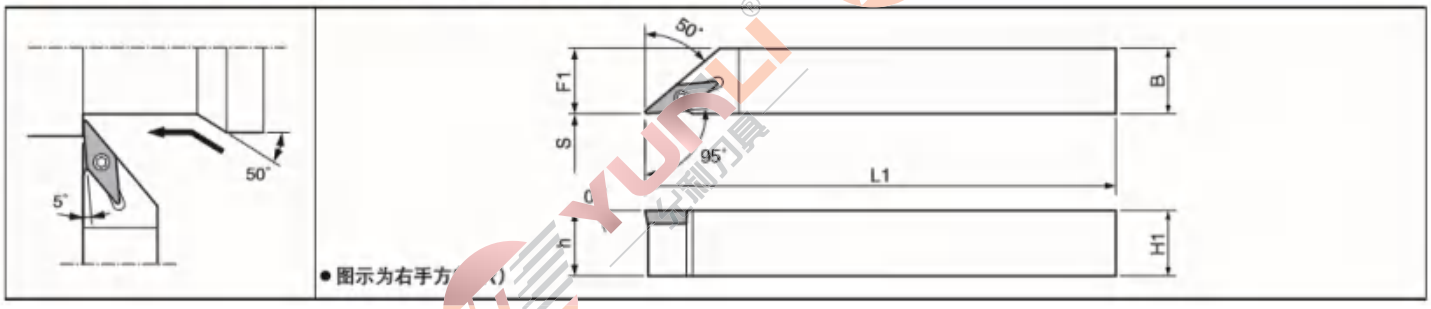

SVPP-FF 型（无偏头）（外径车削 / 端面 / 仿形 / 清角加工）

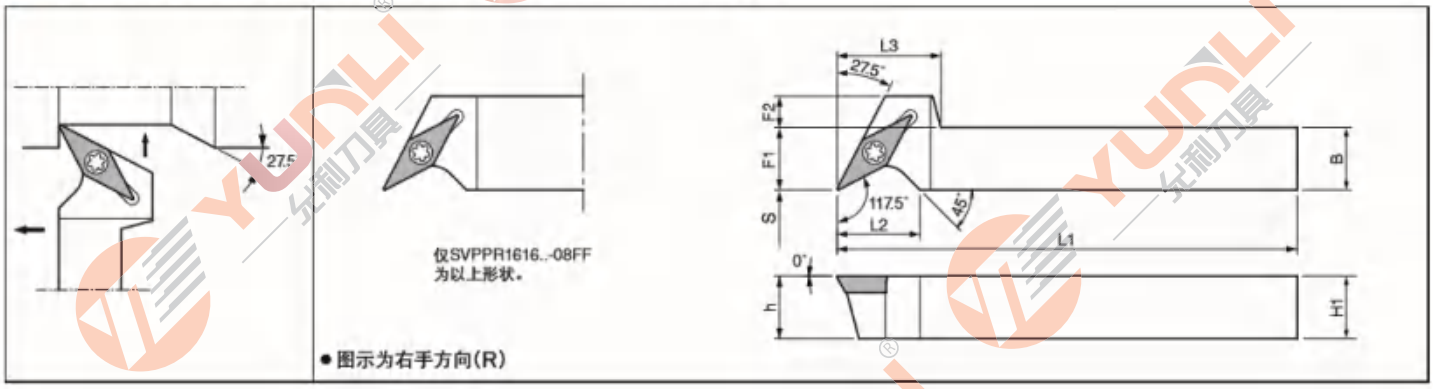

SVJP/SVLP/SVPP

型号	型号		尺寸(mm)								标准刀 尖角 R (rε)	零件		库存	
			H1=h	B	L1	L2	L3	F1	S	F2		紧固螺钉	扳手	R	L
	SVJPR/L	1212F-11FF	12	12	85	-	-	12	0	-	0.2	SB-2570TR	FT-8	●	●
		1212JX-11FF	12	12	120			12						●	●
		1616JX-11FF	16	16				16						●	●
	SVLPR/L	1010JX-08FF	10	10	120	-	-	10	0	-	0.1	SB-2050TR	FT-6	●	●
		1212JX-08FF	12	12				12						●	●
		1616JX-08FF	16	16				16						●	●
		1212JX-11FF	12	12	120	-	-	12	0	-	0.2	SB-2570TR	FT-8	●	●
		1616JX-11FF	16	16				16						●	●
		1212F-08FF	12	12	85	-	-	12	0	-	0.1	SB-2050TR	FT-6	●	●
		1212F-11FF	12	12	85	-	-	12	0	-	0.2	SB-2570TR	FT-8	●	●
	SVPPR	1010JX-08FF	10	10	120	12	16	10	0	4	0.1	SB-2050TR	FT-6	●	●
		1212JX-08FF	12	12				12		2				●	●
		1616JX 08FF	16	16			-	16		-				●	●
		1010JX-11FF	10	10	120	16	20	10	0	8	0.2	SB-2570TR	FT-8	●	●
		1212JX-11FF	12	12				12		6				●	●
		1616JX-11FF	16	16				16		2				●	●
		1212F-08FF	12	12	85	12	16	12	0	2	0.1	SB-2050TR	FT-6	●	●
		1212F-11FF	12	12	85	16	20	12	0	6	0.2	SB-2570TR	FT-8	●	●

SVVB 型(外径车削 / 仿形加工)

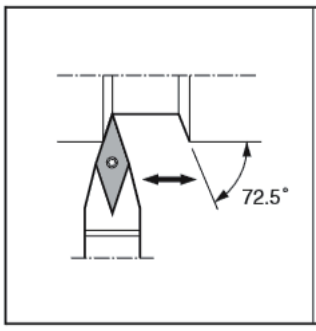

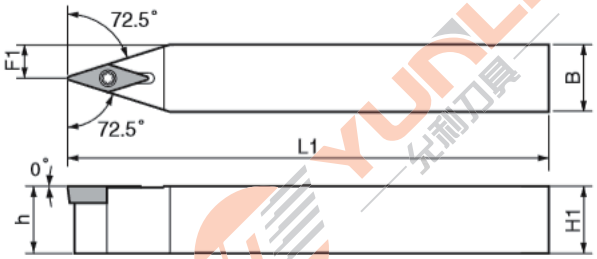

SVVBN

形状	型号		尺寸(mm) H1=h	B	L1	L2	F1	标准刀尖角R (r ε)	零件 紧固螺钉	扳手	垫片	垫片固定螺钉	扳手	库存 R	L
	SVVBN	1212F-11	12	12	85	-	6	0.4	SB-2570TR	FT-8	-	-	-	●	●
		1010JX-11	10	10	120		5							●	●
		1212JX-11	12	12	120		6							●	●
		1616JX-11	16	16	120		8							●	●
		1010F-11	10	10	80	-	5	0.4	SB-2570TR	FT-8	-	-	-	●	●
		1616H-11	16	16	100		8							●	●
		2020K-11	20	20	125		10							●	●
		2525M-11	25	25	150		12.5							●	●
		2020K-16N	20	20	125		10	0.8	SB-40125TRN	FT-15	SVN-32N	SS-4N	LW-4	●	●
		2525M-16N	25	25	150		12.5							●	●

S-SCLCL

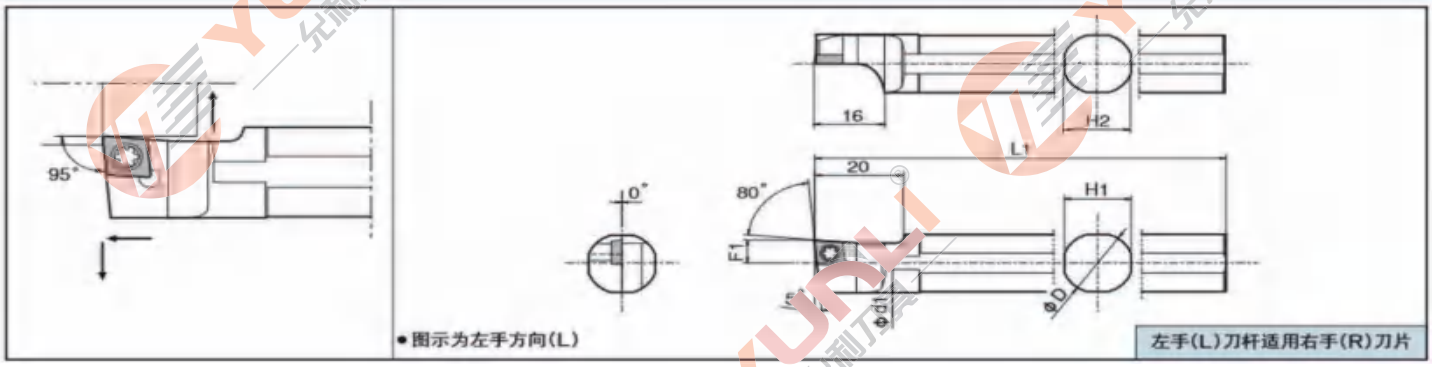

S-SDUC

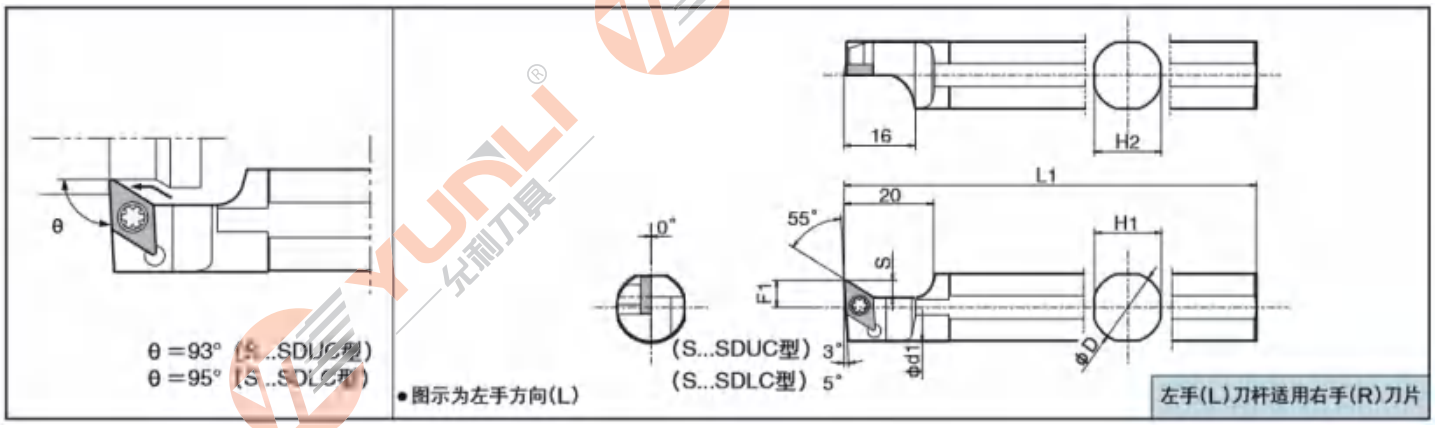

S...SVUB(C)型(外径车削 / 仿形加工)

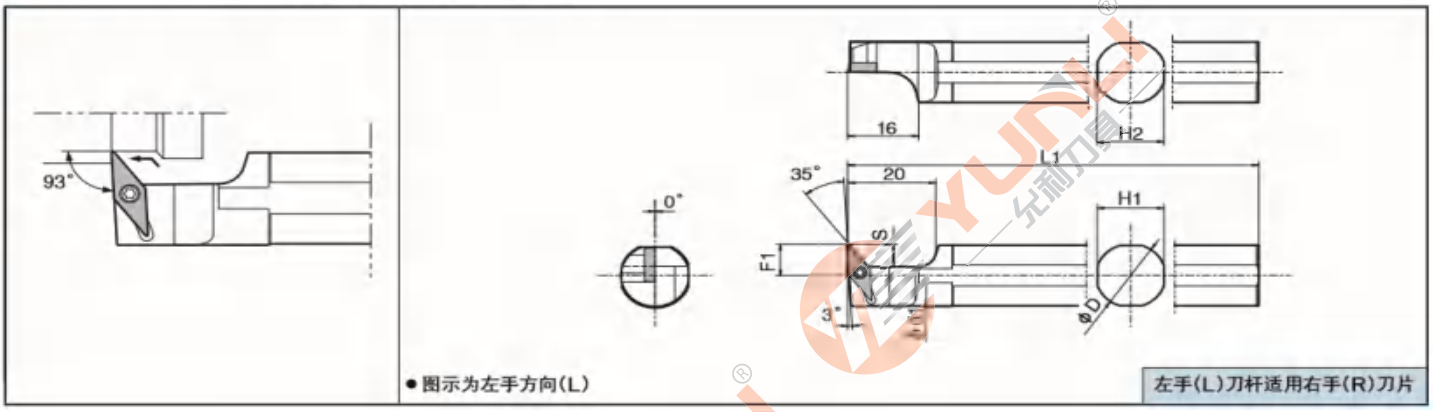

S-SCLC型/S-SDUC型/S-SVUB(C)型

形状	型号		尺寸(mm) ΦD	L1	F1	Φd1	H1=H2	S	标准刀尖角R(rε)	零件		库存
	S-SCLC型	S12F-SCLCL06	12.00	80	6	13.4	11	-	0.4	SB-2560TR	FT-8	●
		S14H-SCLCL06	14.00	100		13.4	13			SB-2570TR		●
		S15F-SCLCL06	15.88	85		15.4	15					●
		S16F-SCLCL06	16.00	85		15.4	15					●
		S19G-SCLCL06	19.05	90		18.4	17					●
		S19K-SCLCL06	19.05	120		18.4	17					●
		S20G-SCLCL06	20.00	90		19.4	18					●
		S20K-SCLCL06	20.00	120		19.4	18					●
		S19G-SCLCL09	19.05	90	10	18.4	17	-	0.4	SB 4065TR	FT-15	●
		S19K SCLCL09	19.05	120		18.4	17					●
		S20G SCLCL09	20.00	90		19.4	18					●
		S20K SCLCL09	20.00	120		19.4	18					●
		S25.0H-SCLCL09	25.00	100		24.4	23					●
		S25K-SCLCL09	25.40	120		24.8	23					●
	S-SDUC型	S14H-SDUCL07	14.00	100	6	13.4	13	3.8	0.4	SB-2560TR	FT-8	●
		S15F-SDUCL07	15.88	85		15.4	15					●
		S19G-SDUCL07	19.05	90		18.4	17					●
		S19K-SDUCL07	19.05	120		18.4	17					●
		S20G-SDUCL07	20.00	90		19.4	18					●
		S20K-SDUCL07	20.00	120		19.4	18					●
		S19G-SDUCL11	19.05	90	10	18.4	17	5.8	0.4	SB-4085TR	FT-15	●
		S19K-SDUCL11	19.05	120		18.4	17					●
		S20G-SDUCL11	20.00	90		19.4	18					●
		S20K-SDUCL11	20.00	120		19.4	18					●
		S22K-SDUCL11	22.00	120		21.4	20					●
		S25.0H-SDUCL11	25.00	100		24.4	23					●
		S25K-SDUCL11	25.40	120		24.8	23					●
		S12F-SDLCL07	12.00	80	6	13.4	11	3.8	0.4	SB-2560TR	FT-8	●
		S14H-SDLCL07	14.00	100		13.4	13					●
		S15F-SDLCL07	15.88	85		15.4	15					●
		S16F-SDLCL07	16.00	85		15.4	15					●
		S19G-SDLCL07	19.05	90		18.4	17					●
		S19K-SDLCL07	19.05	120		18.4	17					●
		S20G-SDLCL07	20.00	90		19.4	18					●
		S20K-SDLCL07	20.00	120		19.4	18					●
		S19G-SDLCL11	19.05	90	10	18.4	17	5.8	0.4	SB-4085-TR	FT-15	●
		S19K-SDLCL11	19.05	120		18.4	17					●
		S20G-SDLCL11	20.00	90		19.4	18					●
		S20K-SDLCL11	20.00	120		19.4	18					●
		S22K-SDLCL11	22.00	120		21.4	20					●
		S25.0H-SDLCL11	25.00	100		24.4	23					●
		S25K-SDLCL11	25.40	120		24.8	23					●
	S SVUB (C) 型	S12F-SVUCL08	12.00	80	7.5	13.4	11	5.5	0.4	SB-2050TR	FT-6	●
		S14H SVUCL08	14.00	100			13					●
		S15F-SVUCL08	15.88	85	8	15.4	15					●
		S16F-SVUCL08	16.00	85		15.4	15					●
		S19G-SVUBL11	19.05	90	10.5	18.4	17	8	0.4	SB-2570TR	FT-8	●
		S19K-SVUBL11	19.05	120		18.4	17					●
		S20G-SVUBL11	20.00	90		19.4	18					●
		S20K-SVUBL11	20.00	120		19.4	18					●
		S25.0H-SVUBL11	25.00	100		24.4	23					●
		S25K-SVUBL11	25.40	120		24.8	23					●

ACLC-FF

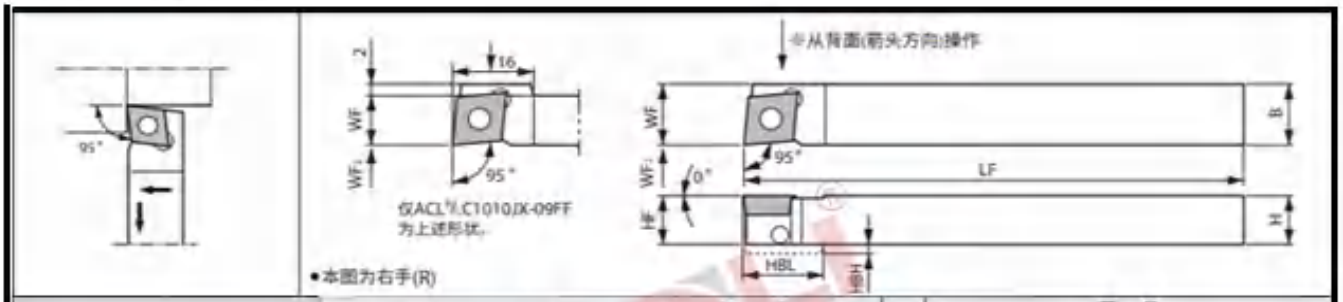

型号		尺寸(mm) H	HF	HBH	B	LF	HBL	WF	WF_2	标准刀尖R (RE)	零件 固定销	锁紧螺钉	扳手
ACLC%	1010JX-06FF	10	10	-	10	120	-	10	0	0.2	LPF-11	HSB4X8%	FH-2
	1010JX-09FF	10	10	2	10	120	16	10			LPF-13		
	1212JX-09FF	12	12	-	12		-	12					
	1616JX-09FF	16	16		16			16			LPF-17		

ADJC-FF

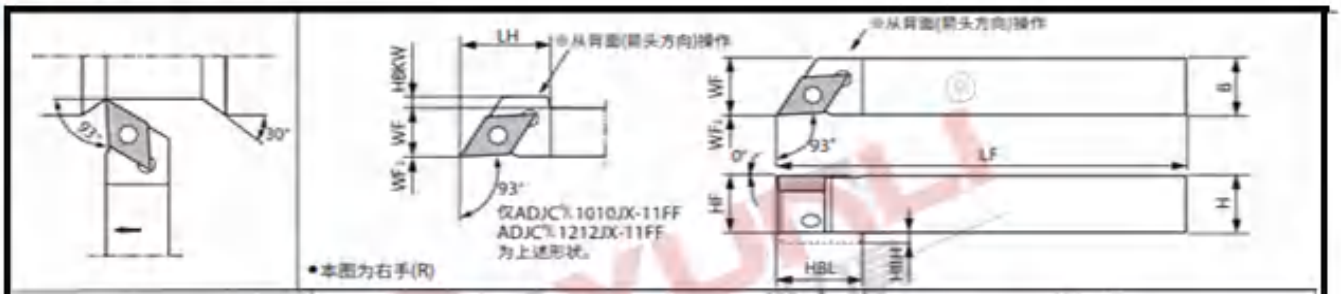

型号		尺寸(mm) H	HF	HBH	B	LF	LH HBL	WF	HBKW	WF_2	标准刀尖R (RE)	零件 固定销	锁紧螺钉	扳手
ADJC%	1010JX-07FF	10	10	-	10	120	-	10	-	0	0.2	LPF-11	HSB4X8%	FH-2
	1010JX-11FF	10	10	2	10		20	10	3		0.2	LPF-13		
	1212JX-11FF	12	12	-	12			12	1					
	1616JX-11FF	16	16		16		-	16	-			LPF-17		

AVJB-FF

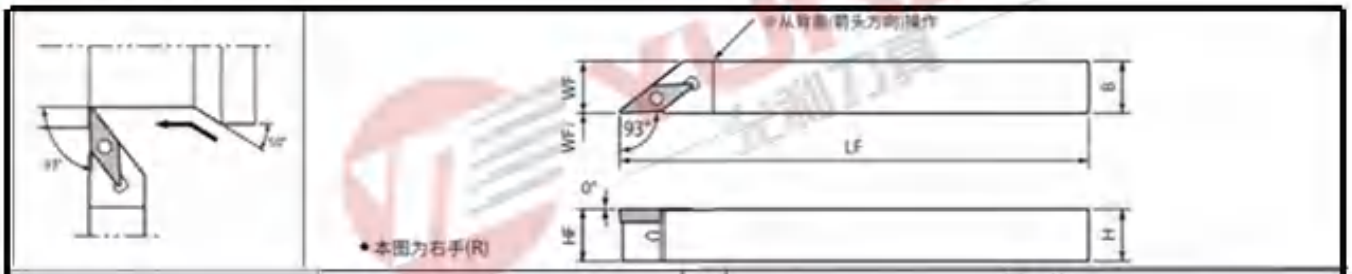

型号		尺寸(mm) H	HF	B	LF	WF	WF_2	标准刀尖R (RE)	零件 固定销	锁紧螺钉	紧固螺钉	扳手
AVJB%	1010JX-11FF	10	10	10	120	10	0	0.4	LPF-11	HSB4X8%	-	FH-2
	1212JX-11FF	12	12	12		12			LPF-1113			
	1616JX-11FF	16	16	16		16			LPF-1117			

菱形 35° 正孔 有角

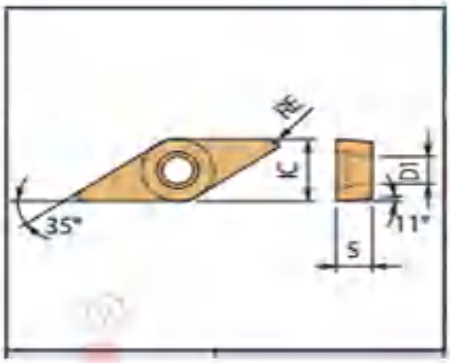

VPET外圆精车刀片

形状	型号	尺寸 Dimension (mm)		材质 Grade recommended			
				Uncoated grade	PVC coating		Ceramic
The basic shape of inserts	Type	a	R	YL10	YL740	YL930	YL60
	VPET080201R/L-FSF	11°	0.1	●	●	●	○
	VPET080202R/L-FSF	11°	0.2	●	●	●	○
	VPET080201MR/L-FSF	11°	0.1	●	●	●	○
	VPET080202MR/L-FSF	11°	0.2	●	●	●	○
	VPET080201MR/L-F	11°	0.1	●	●	●	○
	VPET080202MR/L-F	11°	0.2	●	●	●	○
	VPET080201FR/L-USF	11°	0.1	●	●	●	○
	VPET080202FR/L-USF	11°	0.2	●	●	●	○
	VPET080201FR/L-JSF	11°	0.1	●	●	●	○
	VPET080202FR/L-JSF	11°	0.2	●	●	●	○
	VPET1103005R/L-FSF	11°	0.05	●	●	●	○
	VPET110301R/L-FSF	11°	0.1	●	●	●	○
	VPET110302R/L-FSF	11°	0.2	●	●	●	○
	VPET110301FR/L-USF	11°	0.1	●	●	●	○
	VPET110302FR/L-USF	11°	0.2	●	●	●	○

菱形 70° 正孔 有角

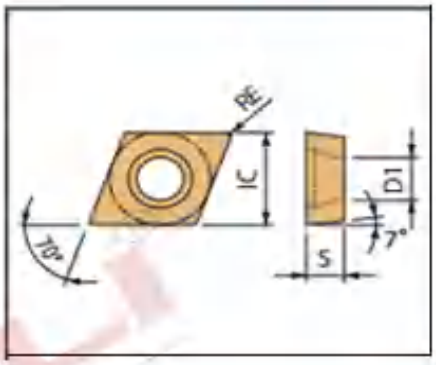

JCGT外圆精车刀片

形状	型号	尺寸 Dimension (mm)		材质 Grade recommended			
				Uncoated grade	PVC coating		Ceramic
The basic shape of inserts	Type	a	R	YL10	YL740	YL930	YL60
	JCET030101R-FSF	7°	0.1	●	●	●	○
	JCET030101L-FSF	7°	0.1	●	●	●	○
	JCET030102R-FSF	7°	0.2	●	●	●	○
	JCET030102L-FSF	7°	0.2	●	●	●	○
	JCET030104L-FSF	7°	0.4	●	●	●	○
	JCET030101MR/L-FSF	7°	0.1	●	●	●	○
	JCET030102MR-F	7°	0.2	●	●	●	○
	JCET030102ML-F	7°	0.2	●	●	●	○
	JCET030104MR-F	7°	0.4	●	●	●	○
	JCET030104ML-F	7°	0.4	●	●	●	○
	JCGT030101R-F	7°	0.1	●	●	●	○
	JCGT030101L-F	7°	0.1	●	●	●	○
	JCGT030102R-F	7°	0.2	●	●	●	○
	JCGT030102L-F	7°	0.2	●	●	●	○
	JCGT030104R/L-F	7°	0.4	●	●	●	○

YUNLI 允利刀具

MCSE倒角加工立铣刀

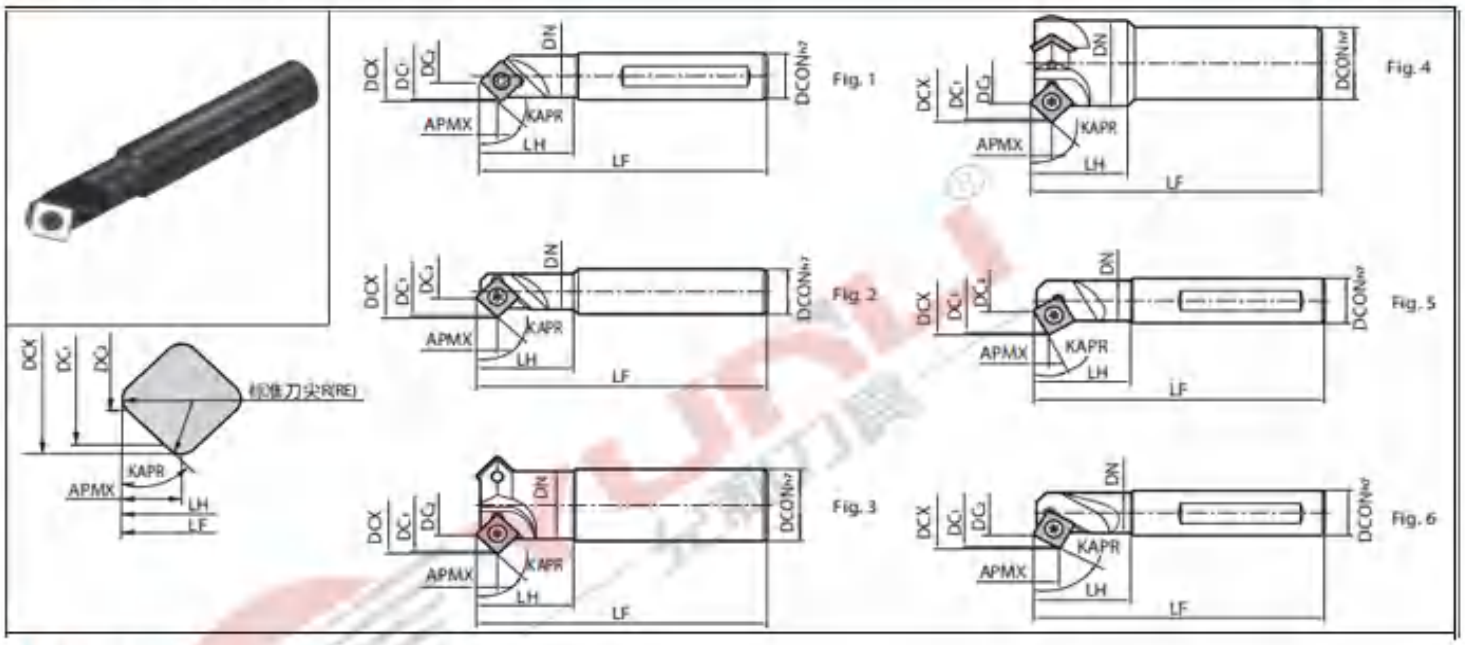

刀杆尺寸

型号		刃数	尺寸 (mm) DCX	DC1	DC2	DCON	DN	LF	LH	APMX	标准刀尖R (RE)	角度 KAPR	前角 A.R.	R.R.	形状	零件 紧固螺钉	扳手
MCSE	104	1	16	15	4	16	15	85	31	6.5	0.4	45°	0°	-4.5°	Fig. 1	SB-3060TR	DT-10
	106	1	22	21	6	20	16	121	41	8.6	0.8	45°	0°	-1°	Fig. 2	SB-5090TR	LTW-20
	115	1	31	30	15	20	18	121	41	8.6	0.8	45°	0°	+5°	Fig. 2	SB-5090TR	LTW-20
	227	2	43	42	27	32	30	121	41	8.6	0.8	45°	0°	+8°	Fig. 3	SB-5090TR	LTW-20
	336	3	52	51	36	32	38	121	41	8.6	0.8	45°	0°	+10°	Fig. 4	SB-5090TR	LTW-20
MCSE	104-30D	1	19	18	4	16	15	85	31	4.7	0.4	30°	0°	-4°	Fig. 5	SB-3060TR	DT-10
	108-30D	1	28	27	8	20	19	110	41	6.3	0.8	30°	0°	-2.5°	Fig. 5	SB-5090TR	LTW-20
	110-30D	1	30	28	10	20	18	120	40	6.3	0.8	30°	0°	0°	Fig. 5	SB-5090TR	LTW-20
MCSE	108-60D	1	19.5	19	8	20	19	110	41	10	0.8	60°	0°	-3.5°	Fig. 6	SB-5070TR	LTW-20
	120-60D	1	31	30	20	20	18	120	40	10	0.8	60°	0°	0°	Fig. 6	SB-5090TR	LTW-20

适用刀片

型号	适用刀片		
MCSE 104 104-30D	SDKW 09T204TN	SDKW 09T204FN	SDMT 09T204C
MCSE 106 115 227 336 MCSE 108-30D 110-30D MCSE 108-60D 120-60D	SEKW 120304TN 120308TN	SEKW 120304FN 120308FN	SEMT 120304C

适用刀片SEKW

形状 有方向的刀片图示为右手(R)		型号	尺寸(mm) IC	S	D1	RE BCH	BS	角度 AN	AS	材质 YL10	YL740	YL930
	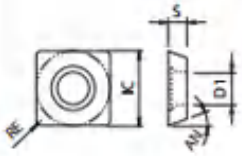	SDKW 09T204TN	9.525	2.78	3.4	0.4	-	15°	-	●	●	●
		09T204FN								●	●	●
		SEKW 120304TN	12.70	3.18	5.5			20°		●	●	●
		120304FN								●	●	●
		120308TN				0.8				●	●	●
		120308FN								●	●	●

STLN (无偏头)(外径 / 提拉端面加工)

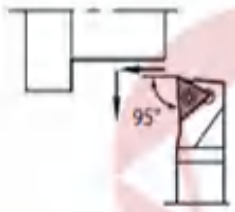

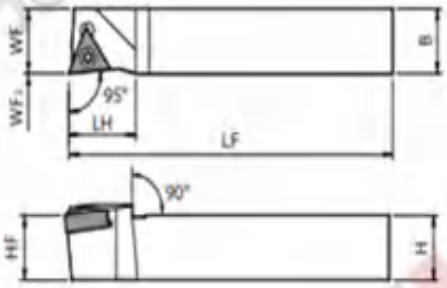

侧前角:-6°
刃倾角:-7°

•本图为右手(R)

刀杆尺寸

型号	尺寸(mm) H	HF	B	LF	LH	WF	WF_2	标准刀尖R (RE)	零件 紧固螺钉	扳手	适用刀片
STLNR 1010K-09FF	10	10	10	120	15	10	0	0.2	M2. 5*6L	T8	TNGU0903..
1212F-09FF	12	12	12	85		12					
1212K-09FF				120							
1616K-09FF	16	16	16			16					

适用刀片

用途	精加工	低进给
形状 / 刀杆型号	FR-F 	(E/F)R-U 
STLNR...-09FF	TNGU0903..	TNGU0903..

ECC长刃倒角刀

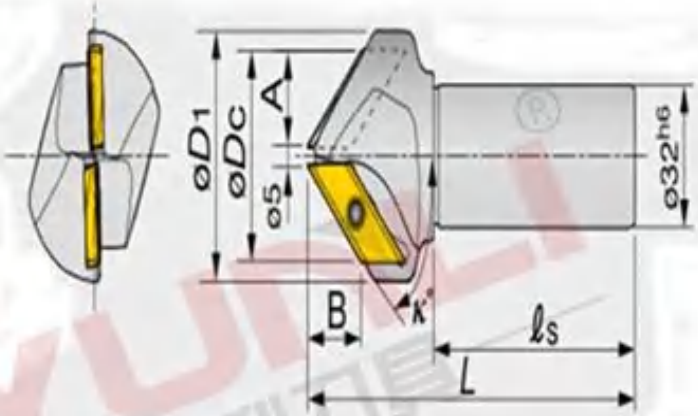

型号	øDc	z	κ°	øD1	A	B	øDs	ℓs	L	刀片
ECC31005R-30	34	1	30	40	14.5	25.5	32	80	130.2	XCET3104...
ECC31005R-45	46	2	45	56	20.5	20.5	32	80	130.1	XCET3104...
ECC31005R-60	55	2	60	72	25.5	14.5	32	80	130.1	XCET3104...

XCET倒角刀片

型号	R角	A	B	T	材质		
					YL10	YL740	YL930
XCET310404ER	0. 4	22	12. 7	4. 5	●	●	●

PTXNR/L外圆切削刀杆

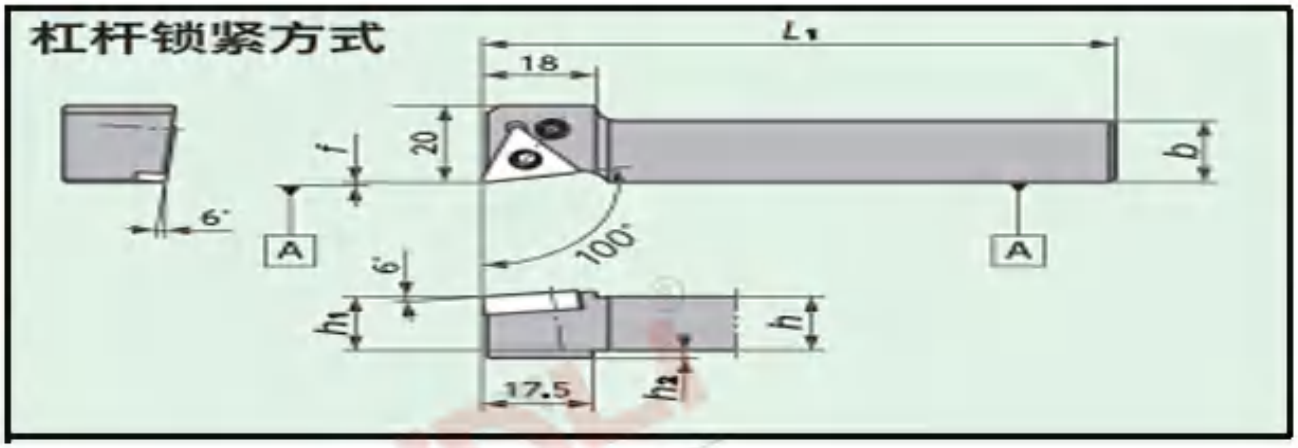

刀杆尺寸

刀杆形状	刀杆型号		库存 R	库存 L	尺寸(mm) h	b	L_1	h_1	f	h_2	适用刀片	零部件 垫片	杠杆	紧固螺丝	弹簧	扳手
	PTXNR/L	1016X 33N	●		10	16	120	10	0.0	2	TN□□1604	—	LCL33N	LCS33	—	LW-2
		1216X 33N	●		12	16	120	12	0.0	0						
		1616X 33N	●		16	16	120	16	0.0	0						
		2020X 33N	●		20	20	120	20	0.0	0						

DS-PTXR/L内孔切削刀杆

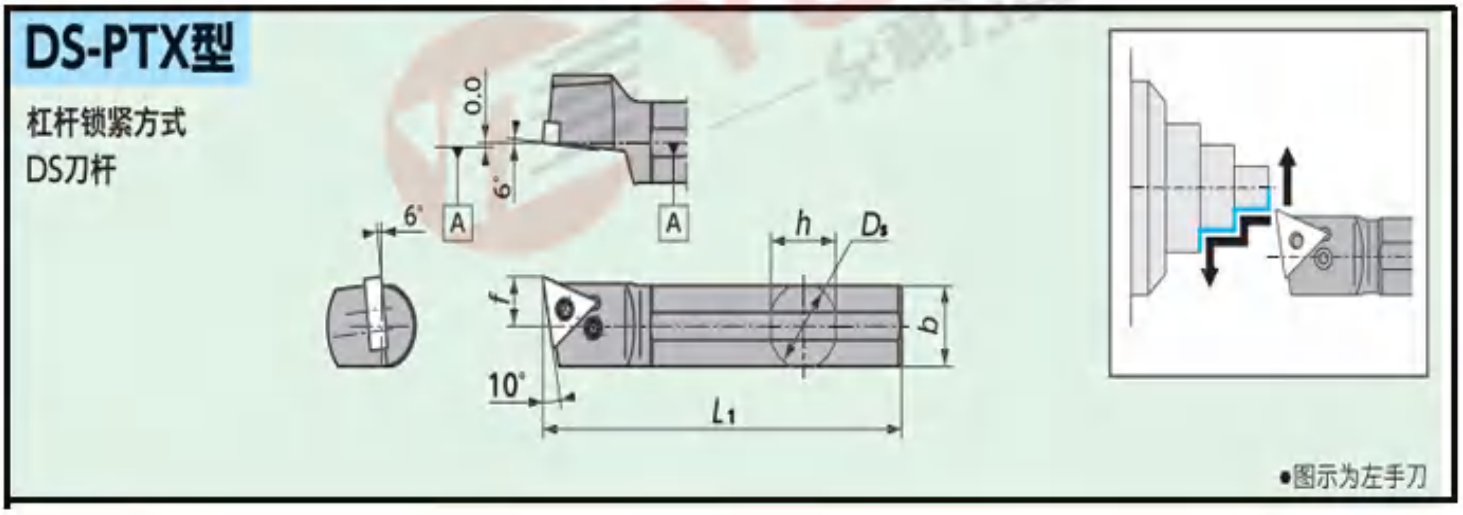

DS-PTX-ACH型

中心高度調整功能DS刀杆

〈零部件〉

刀柄	调整块	调整块螺栓
ϕ16	ACH-W18	WS060415-003
ϕ19.05		
ϕ20		WS060419-004
ϕ22		
ϕ25	ACH-W24	
ϕ25.4		

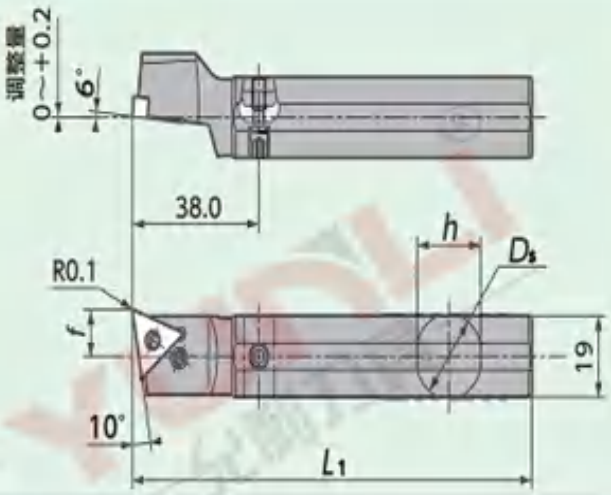

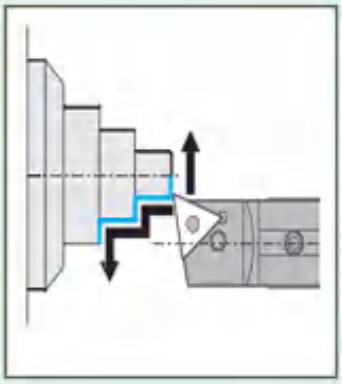

●图示为左手刀

刀杆尺寸

刀杆形状	刀杆型号	库存 R	库存 L	尺寸(mm) Ds	h	b	L1	f	适用刀片	零部件 垫片	杠杆	紧固螺丝	扳手
	DS-PTX®𝓘 16 -33*		★	16.00	15	18	120	11.0					
	19 -33		●	19.05	18	18	120	11.0					
	20 -33		●	20.00	19	19	120	11.0	TN□□1604	—	LCL33N	LCS33	LW-2
	22 -33*		●	22.00	21	21	120	12.0					
	25M-33		●	25.40	24	24	150	13.0					
	DS-PTX®𝓘 16 -33-ACH*		●	16.00	15.5	15	120	11.0					
	19 -33-ACH		●	19.05	18	18	120	11.0					
	20 -33-ACH		●	20.00	19	19	120	11.0	TN□□1604	—	LCL33N	LCS33	LW-2
	22 -33-ACH*		●	22.00	21	21	120	12.0					
	25 -33MET-ACH		●	25.00	24	24	150	13.0					
	25 -33-ACH		●	25.40	24	24	150	13.0					

六角形 80° 正角 有孔

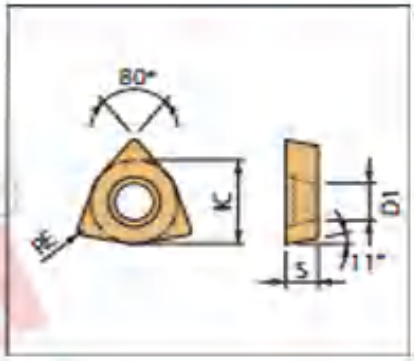

WPGT外圆精车刀片

形状	型号	尺寸 Dimension (mm)		材质 Grade recommended			
				Uncoated grade	PVC coating		Ceramic
The basic shape of inserts	Type	a	R	YL10	YL740	YL930	YL60
	WPGT110202R-Y	11°	0.2	●	●	●	○
	WPGT110202L-Y	11°	0.2	●	●	●	○
	WPGT110204R-Y	11°	0.4	●	●	●	○
	WPGT110204L-Y	11°	0.4	●	●	●	○
	WPGT160304R-Y	11°	0.4	●	●	●	○
	WPGT160304L-Y	11°	0.4	●	●	●	○
	WPGT160308L-Y	11°	0.8	●	●	●	○
	WPGT160308R-Y	11°	0.8	●	●	●	○
	WPGT110204MR-Y	11°	0.4	●	●	●	○
	WPGT110204ML-Y	11°	0.4	●	●	●	○
	WPGW110202	11°	0.2	●	●	●	○
	WPGW110204	11°	0.4	●	●	●	○
	WPGW160304	11°	0.4	●	●	●	○
	WPGW160308	11°	0.8	●	●	●	○

菱形 25° 正角 有孔

XCMT外圆精车刀片

形状	型号	尺寸 Dimension (mm)		材质 Grade recommended			
				Uncoated grade	PVC coating		Ceramic
The basic shape of inserts	Type	a	R	YL10	YL740	YL930	YL60
	XCMT150302-SVX	7°	0.2	●	●	●	○
	XCMT150304-SVX	7°	0.4	●	●	●	○
	XCMT150308-SVX	7°	0.8	●	●	●	○
	XCGT150302-SVX	7°	0.2	●	●	●	○
	XCGT150304-SVX	7°	0.4	●	●	●	○
	XCGT150308-SVX	7°	0.8	●	●	●	○
	YWMT11T202-ZF	7°	0.2	●	●	●	○
	YWMT11T204-ZF	7°	0.4	●	●	●	○
	YWMT11T204-ZM	7°	0.4	●	●	●	○
	YWGT11T202-ZF	7°	0.2	●	●	●	○
	YWGT11T204-ZF	7°	0.4	●	●	●	○
	YWGT11T204-ZM	7°	0.4	●	●	●	○
	YNMG160404-25°	7°	0.4	●	●	●	○
	XCET310404ER	7°	0.4	●	●	●	○
	VNMG160404MF-25°	7°	0.4	●	●	●	○

25° 外圆精车刀杆

型号	适用刀片		尺寸 (mm)					
			H	B	LF	LH	HF	WF
SXZCR/L1616H15	XCMT	150302-SVX	16	16	100	35	16	20
SXZCR/L2020K15		150304-SVX	20	20	125	35	20	25
SXZCR/L2525M15		150308-SVX	25	25	150	40	25	32
SYJBR/L1616H11	YWMT	11T202-ZF	16	16	100	35	16	20
SYJBR/L2020K11		11T204-ZF	20	20	125	35	20	25
SYJBR/L2525M11		11T202-ZM	25	25	150	40	25	32

YBGT外圆精车仿形刀片

形状	型号	尺寸 Dimension (mm)		材质 Grade recommended			
				Uncoated grade	PVC coating		Ceramic
The basic shape of inserts	Type	a	R	YL10	YL740	YL930	YL60
	YBGT11T2015SPFR-JSP	7°	0.15	●	●	○	○

外圆车削刀片

WNMG-SFJL

WNMG-TF

形状	型号	尺寸 Dimension (mm)		材质 Grade recommended			
				Uncoated grade	PVC coating		Ceramic
The basic shape of inserts	Type	a	R	YL10	YL740	YL930	YL60
	CCMT060204-SM	7°	0.4	●	●	●	○
	CCMT09T304-SM	7°	0.4	●	●	●	○
	TNMG160404-TF	–	0.4	●	●	●	○
	TNMG160408-TF	–	0.8	●	●	●	○
	TNMG160408-SFJL	–	0.8	●	●	●	○
	CNMG120404-TF	7°	0.4	●	●	●	○
	CNMG120408-TF	7°	0.8	●	●	●	○
	WNMG080404-TF	0°	0.4	●	●	●	○
	WNMG080408SFJL	0°	0.8	●	●	●	○
	DNMG150404-TF	0°	0.4	●	●	●	○
	DNMG150408-TF	0°	0.8	●	●	●	○
	DNMG150604-TF	0°	0.4	●	●	●	○
	DNMG150608-TF	0°	0.8	●	●	●	○
	VNMG160404-TF	0°	0.4	●	●	●	○
	VNMG160408-TF	0°	0.8	●	●	●	○

菱形 35° 正角 有孔

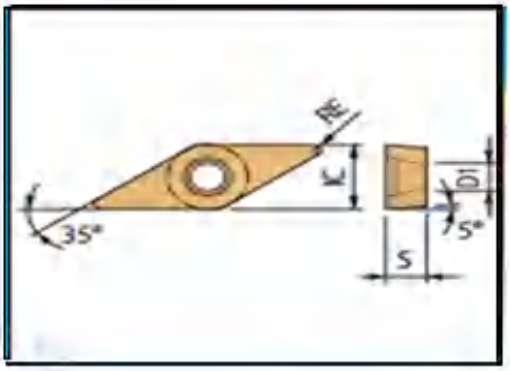

VBGT/VCGT外圆精车刀片

形状	型号	尺寸 Dimension (mm)		材质 Grade recommended			
				Uncoated grade	PVC coating		Ceramic
The basic shape of inserts	Type	a	R	YL10	YL740	YL930	YL60
	VCGT1103005MF	5°	0.05	●	●	●	○
	VCGT110301MF	5°	0.1	●	●	●	○
	VCGT110302MF	5°	0.2	●	●	●	○
	VCGT110304MF	5°	0.4	●	●	●	○
	VBGT1103005MF	5°	0.05	●	●	●	○
	VBGT110301MF	5°	0.1	●	●	●	○
	VBGT110302MF	5°	0.2	●	●	●	○
	VBGT110304MF	5°	0.4	●	●	●	○

• 承接非标定制刀具

WNGG外圆精车刀片

形状	型号	尺寸 Dimension (mm)		材质 Grade recommended			
				Uncoated grade	PVC coating		Ceramic
The basic shape of inserts	Type	a	R	YL10	YL740	YL930	YL60
	WNGG0604005MF	0°	0.05	●	●	●	○
	WNGG060401MF	0°	0.1	●	●	●	○
	WNGG060402MF	0°	0.2	●	●	●	○
	WNGG060404MF	0°	0.4	●	●	●	○

SCLNR外圆刀杆

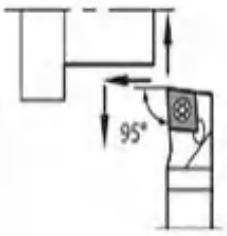

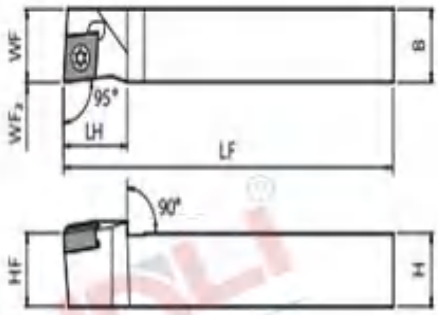

侧前角：-6°
刃倾角：-6°

•本图为右手(R)

刀杆尺寸

型号		尺寸(mm)							标准刀尖R (RE)	零件	
		H	HF	B	LF	LH	WF	WF_2		紧固螺钉	扳手
SCLNR	1010K-07FF	10	10	10	120	15	10	0	0.2	M3*8L	T10
	1212F-07FF	12	12	12	85		12				
	1212K-07FF				120						
	1616K-07FF	16	16	16			16				

适用刀片

用途	精加工~半精加工	半精加工~粗加工	精加工	低进给
形状 / 刀杆型号	SK 	GK 	FR-F 	FR-U 
SCLNR...-07FF	CNGU0703..	CNMU0703..	CNGU0703..	CNGU0703..

型號	使用刀片	最小加工孔	規格						墊片	墊片螺絲	壓板	壓板螺絲	扳手
			Ød	f	ℓ1	ℓ2	h	a°					
S20Q-MTUNR/L16	TN□□1604□□	Ø25	20	13.5	180	40	19	15°	X	MLP33L	MCPM-6	MCS520-2.5	L2, L3
S25R-MTUNR/L16		Ø32	25	16.5	200	45	24	12°			MCPM-20	MCS620-3	
S32S-MTUNR/L16		Ø41	32	22.5	250	54	30	17°	MST-322	MLP34L	MCPM-21	MCS625-3	L2, L3
S40T-MTUNR/L16		Ø50	40	26.5	300	60	38	15°					
S45U-MTUNR/L16		Ø55	45	30	350	65	43	15°					
S50U-MTUNR/L16		Ø60	50	31	350	65	48	12°					
S60V-MTUNR/L16		Ø70	60	38	400	70	58	10°					
S63Y-MTUNR/L16		Ø75	63	37.5	500	75	61	10°					
S40T-MTUNR/L22	TN□□2204□□	Ø50	40	26.5	300	55	38	15°	MST-432	MLP46	MCPM-9	MCS828-4	L2.5, L4
S50U-MTUNR/L22		Ø60	50	31	350	70	48	12°					
H20Q-MTUNR/L16B	TN□□1604□□	Ø25	20	13	180	40	19	15°	X	MLP33L	MCPM-6	MCS520-2.5	L2, L3
H25R-MTUNR/L16B		Ø32	25	16.5	200	45	24	12°			MCPM-20	MCS620-3	
H32S-MTUNR/L16B		Ø41	32	22.5	250	54	30	17°	MST-322	MLP34L	MCPM-21	MCS625-3	L2, L3
H40T-MTUNR/L16B		Ø50	40	26.5	300	60	38	15°					
H50U-MTUNR/L16B		Ø60	50	31	350	65	48	12°					
H40T-MTUNR/L22B	TN□□2204□□	Ø50	40	26.5	300	55	38	15°	MST-432	MLP46	MCPM-9	MCS828-4	L2.5, L4
H50U-MTUNR/L22B		Ø60	50	31	350	70	48	12°					

型號	使用刀片	最小加工孔	規格						墊片	墊片螺絲	壓板	壓板螺絲	扳手
			Ød	f	ℓ1	ℓ2	h	a°					
S20Q-MTUNR/L16R	TN□□1604□□	Ø25	20	13.5	180	40	19	15°	X	MLP33L	MCPM-6	MCS520-2.5	L2, L3
S25R-MTUNR/L16R		Ø32	25	17	200	45	24	12°			MCPM-20	MCS620-3	
S32S-MTUNR/L16R		Ø41	32	23	250	54	30	17°	MST-322	MLP34L	MCPM-21	MCS625-3	
S40T-MTUNR/L16R		Ø50	40	26.5	300	60	38	15°					
S45U-MTUNR/L16R		Ø55	45	30	350	65	43	15°					
S50U-MTUNR/L16R		Ø60	50	31	350	65	48	12°					
S60V-MTUNR/L16R		Ø70	60	38	400	70	58	10°					
S63Y-MTUNR/L16R		Ø75	63	37.5	500	75	61	10°					
H20Q-MTUNR/L16RB		Ø25	20	13	180	40	19	15°	X	MLP33L	MCPM-6	MCS520-2.5	
H25R-MTUNR/L16RB		Ø32	25	16.5	200	45	24	12°			MCPM-20	MCS620-3	
H32S-MTUNR/L16RB		Ø41	32	22	250	54	30	17°	MST-322	MLP34L	MCPM-21	MCS625-3	
H40T-MTUNR/L16RB		Ø50	40	26.5	300	60	38	15°					
H50U-MTUNR/L16RB		Ø60	50	31	350	65	48	12°					

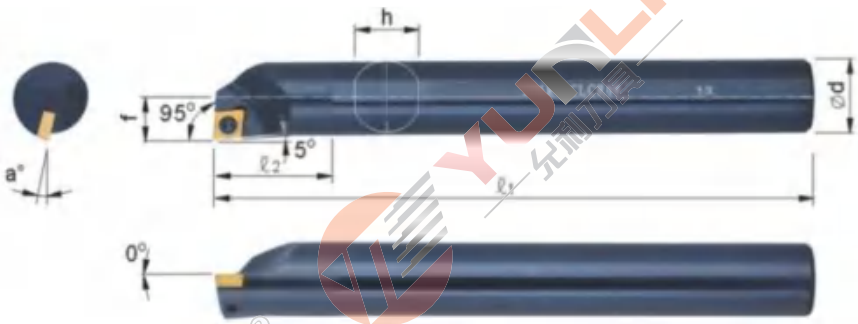

型號	使用刀片	最小加工孔	規格						螺絲	扳手
			Ød	f	ℓ1	ℓ2	h	a°		
S07K-SCLCR/L06	CC□□0602□□	Ø9	8	4.2	125			15°	CSTB-2.5S	T-8
S08K-SCLCR/L06		Ø10	8	5	125		7	12°		
S09K-SCLCR/L06-A16		Ø12	16	5	125	24	15	12°		
S10K-SCLCR/L06		Ø13	10	6	125	22	9	12°	CSTB-2.5	
S12M-SCLCR/L06		Ø16	12	7	150	23	11	10°		
S16N-SCLCR/L06		Ø20	16	9	160	25	15	8°		
S12M-SCLCR/L09	CC□□09T3□□	Ø16	12	9	150	27	11	12°	CSTB-3.5	T-15
S14Q-SCLCR/L09-A16		Ø17	16	9	160	30	19	12°		
S16N-SCLCR/L09		Ø20	16	9.5	160	30	15	10°		
S20Q-SCLCR/L09		Ø25	20	11.5	180	35	19	8°		
S25R-SCLCR/L09		Ø31	25	14	200	40	24	6°		
S32S-SCLCR/L09		Ø39	32	17.5	250	45	30	4°		
S40T-SCLCR/L09		Ø43	40	21	300	50	38	0°		
S20Q-SCLCR/L12	CC□□1204□□	Ø25	20	12	180	40	19	10°	CSTB-5	T-20
S25R-SCLCR/L12		Ø32	25	14.5	200	40	24	8°		
S32S-SCLCR/L12		Ø39	32	18	250	45	30	6°		
S40T-SCLCR/L12		Ø50	40	22	300	50	38	4°		
H07K-SCLCR/L06B	CC□□0602□□	Ø9	8	4.2	125	18	7	15°	CSTB-2.5S	T-8
H08K-SCLCR/L06B		Ø10	8	5	125	20	7	12°		
H09K-SCLCR/L06B-A16		Ø12	16	5	125	24	15	12°		
H10K-SCLCR/L06B		Ø13	10	6	125	22	9	12°	CSTB-2.5	
H12M-SCLCR/L06B		Ø16	12	7	150	23	11	10°		
H16N-SCLCR/L06B		Ø20	16	9	160	25	15	8°		
H12M-SCLCR/L09B	CC□□09T3□□	Ø16	12	9	150	27	11	12°	CSTB-3.5	T-15
H14Q-SCLCR/L09B-A16		Ø17	16	9	160	30	19	12°		
H16N-SCLCR/L09B		Ø20	16	9.5	160	30	15	10°		
H20Q-SCLCR/L09B		Ø25	20	11.5	180	35	19	8°		
H25R-SCLCR/L09B		Ø31	25	14	200	40	24	6°		
H32S-SCLCR/L09B		Ø39	32	17.5	250	45	30	4°		
H20Q-SCLCR/L12B	CC□□1204□□	Ø25	20	12	180	40	19	10°	CSTB-5	T-20
H25R-SCLCR/L12B		Ø32	25	14.5	200	40	24	8°		
H32S-SCLCR/L12B		Ø39	32	18	250	45	30	6°		
H40T-SCLCR/L12B		Ø50	40	22	300	50	38	4°		
C04H-SCLCR/L03-05	CC□□0301□□	Ø5	4	2.5	100	X	3.5	15°	SB-1630TR	T-6
C07K-SCLCR/L06	CC□□0602□□	Ø9	8	4.2	125	X	7.4	15°	CSTB-2.5S	T-8
C08K-SCLCR/L06		Ø10	8	5	125	X	7.4	12°		
C10M-SCLCR/L06		Ø13	10	6	150	X	9.4	12°	CSTB-2.5	
C12Q-SCLCR/L06		Ø16	12	7	180	X	11.4	10°		
C12Q-SCLCR/L09	CC□□09T3□□	Ø16	12	9	160	X	11	12°	CSTB-3.5	T-15
C16R-SCLCR/L09		Ø20	16	9.5	200	X	15	10°		
C20S-SCLCR/L09		Ø25	20	11.5	250	X	19	8°		
C25T-SCLCR/L09		Ø31	25	14	300	X	24	6°		
C20S-SCLCR/L12	CC□□1204□□	Ø25	20	12	250	X	19	10°	CSTB-5	T-20
C25T-SCLCR/L12		Ø32	25	14.5	300	X	24	8°		

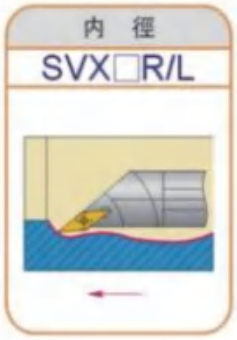

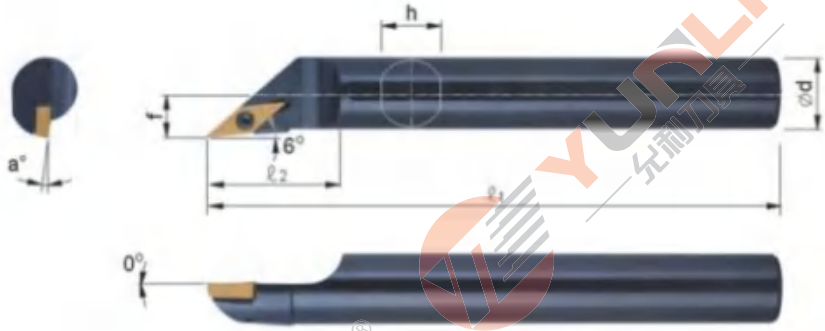

型號	使用刀片	最小加工孔	規格 ⌀d	f	ℓ1	ℓ2	h	a°	螺絲	扳手
S10K-SVXBR/L11-G6	VB□□1103□□	⌀14	10	7.5	125	35	9	15°	CSTB-2.5L080	T-8
S12M-SVXBR/L11-G6		⌀16	12	8.5	150	35	11	12°		
S16N-SVXBR/L11-G6		⌀22	16	11	160	40	15	10°		
S20Q-SVXBR/L11-G6		⌀27	20	13.5	180	45	19	8°		
H10K-SVXBR/L11-G6B		⌀14	10	7.5	125	35	9	15°		
H12M-SVXBR/L11-G6B		⌀16	12	8.5	150	35	11	12°		
H16N-SVXBR/L11-G6B		⌀22	16	11	160	40	15	10°		
H20Q-SVXBR/L11-G6B		⌀27	20	13.5	180	45	19	8°		

型號	使用刀片	最小加工孔	規格 ⌀d	f	ℓ1	ℓ2	h	a°	螺絲	扳手
S10K-SVXCR/L11-G6	VC□□1103□□	⌀14	10	7.5	125	35	9	12°	CSTB-2.5L080	T-8
S12M-SVXCR/L11-G6		⌀16	12	8.5	150	35	11	10°		
S16N-SVXCR/L11-G6		⌀22	16	11	160	40	15	8°		
S20Q-SVXCR/L11-G6		⌀27	20	13.5	180	45	19	6°		
H10K-SVXCR/L11-G6B		⌀14	10	7.5	125	35	9	12°		
H12M-SVXCR/L11-G6B		⌀16	12	8.5	150	35	11	10°		
H16N-SVXCR/L11-G6B		⌀22	16	11	160	40	15	8°		
H20Q-SVXCR/L11-G6B		⌀27	20	13.5	180	45	19	6°		

型號	使用刀片	最小加工孔	規格 ⌀d	f	ℓ1	ℓ2	h	a°	螺絲	墊片	墊片螺絲	扳手
S16N-SVXBR/L16-G6	VB□□1604□□	⌀22	16	11.5	160	50	15	12°	CSTB-3.5	X	X	T-15
S20Q-SVXBR/L16-G6		⌀27	20	13.5	180	50	19	10°				
S25R-SVXBR/L16-G6		⌀32	25	16	200	50	24	8°	CSTB-3.5LP	SSV32	DTS5-3.5	
S32S-SVXBR/L16-G6		⌀40	32	19.5	250	60	30	10°				
S40T-SVXBR/L16-G6		⌀50	40	23.5	300	65	38	8°				
S50U-SVXBR/L16-G6		⌀60	50	28.5	350	70	48	6°				
H16N-SVXBR/L16-G6B		⌀22	16	11.5	160	50	15	12°	CSTB-3.5	X	X	
H20Q-SVXBR/L16-G6B		⌀27	20	13.5	180	50	19	10°				
H25R-SVXBR/L16-G6B		⌀32	25	16	200	50	24	8°	CSTB-3.5LP	SSV32	DTS5-3.5	
H32S-SVXBR/L16-G6B		⌀40	32	19.5	250	60	30	10°				
H40T-SVXBR/L16-G6B		⌀50	40	23.5	300	65	38	8°				
H50U-SVXBR/L16-G6B		⌀60	50	28.5	350	70	48	6°				

型號	使用刀片	最小加工孔	規格 ⌀d	f	ℓ1	ℓ2	h	a°	螺絲	墊片	墊片螺絲	扳手
S16N-SVXCR/L16-G6	VC□□1604□□	⌀22	16	11.5	160	50	15	10°	CSTB-3.5	X	X	T-15
S20Q-SVXCR/L16-G6		⌀27	20	13.5	180	50	19	8°				
S25R-SVXCR/L16-G6		⌀32	25	16	200	50	24	6°	CSTB-3.5LP	SSV32	DTS5-3.5	
S32S-SVXCR/L16-G6		⌀40	32	19.5	250	60	30	8°				
S40T-SVXCR/L16-G6		⌀50	40	23.5	300	65	38	6°				
S50U-SVXCR/L16-G6		⌀60	50	28.5	350	70	48	4°				
H16N-SVXCR/L16-G6B		⌀22	16	11.5	160	50	15	10°	CSTB-3.5	X	X	
H20Q-SVXCR/L16-G6B		⌀27	20	13.5	180	50	19	8°				
H25R-SVXCR/L16-G6B		⌀32	25	16	200	50	24	6°	CSTB-3.5LP	SSV32	DTS5-3.5	
H32S-SVXCR/L16-G6B		⌀40	32	19.5	250	60	30	8°				
H40T-SVXCR/L16-G6B		⌀50	40	23.5	300	65	38	6°				
H50U-SVXCR/L16-G6B		⌀60	50	28.5	350	70	48	4°				

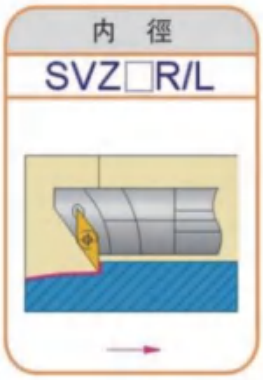

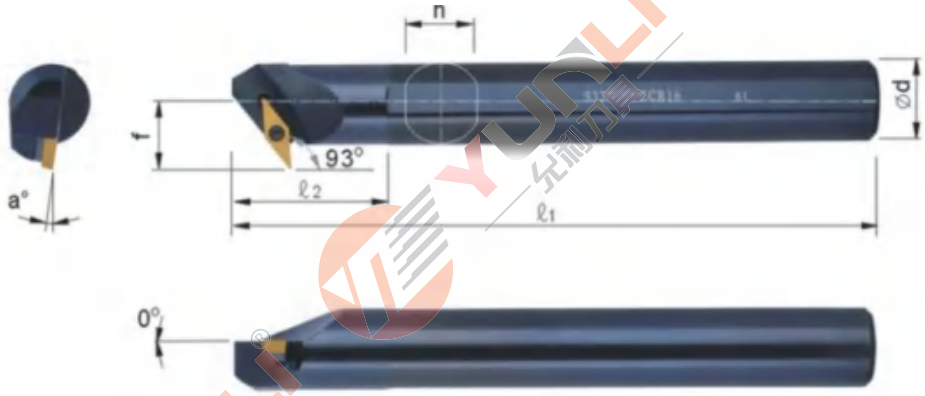

型號	使用刀片	最小加工徑	規格						螺絲	板手
			ød	f	ℓ1	ℓ2	h	a°		
S16N-SVZBR/L11	VB□□1103□□	Ø22	16	14	160	34	15	10°	CSTB-2.5L080	T-8
S20Q-SVZBR/L11		Ø27	20	16	180	37	19	8°		
H16N-SVZBR/L11B		Ø22	16	14	160	34	15	10°		
H20Q-SVZBR/L11B		Ø27	20	16	180	37	19	8°		

型號	使用刀片	最小加工徑	規格						螺絲	板手
			ød	f	ℓ1	ℓ2	h	a°		
S16N-SVZCR/L11	VC□□1103□□	Ø22	16	14	160	34	15	8°	CSTB-2.5L080	T-8
S20Q-SVZCR/L11		Ø27	20	16	180	37	19	6°		
H16N-SVZCR/L11B		Ø22	16	14	160	34	15	8°		
H20Q-SVZCR/L11B		Ø27	20	16	180	37	19	6°		

型號	使用刀片	最小加工徑	規格						螺絲	墊片	墊片螺絲	扳手
			ød	f	ℓ1	ℓ2	h	a°				
S25R-SVZBR/L16	VB□□1604□□	Ø34	25	20.5	200	50	24	8°	CSTB-3.5LP	X	X	T-15
S32S-SVZBR/L16		Ø42	32	24	250	50	30	10°		SSV32	DTS5-3.5	
S40T-SVZBR/L16		Ø50	40	28	300	60	38	8°				
S50U-SVZBR/L16		Ø60	50	33	350	65	48	6°				
H25R-SVZBR/L16B		Ø34	25	20.5	200	50	24	[illegible]		X	X	
H32S-SVZBR/L16B		Ø42	32	24	250	50	30	10°		SSV32	DTS5-3.5	
H40T-SVZBR/L16B		Ø50	40	28	300	60	38	8°				
H50U-SVZBR/L16B		Ø60	50	33	350	65	48	6°				

型號	使用刀片	最小加工徑	規格						螺絲	墊片	墊片螺絲	扳手
			ød	f	ℓ1	ℓ2	h	a°				
S25R-SVZCR/L16	VC□□1604□□	Ø34	25	[illegible]	200	50	24	6°	CSTB-3.5LP	X	X	T-15
S32S-SVZCR/L16		Ø42	[illegible]	[illegible]	250	50	30	6°		SSV32	DTS5-3.5	
S40T-SVZCR/L16		Ø50	[illegible]	[illegible]	300	60	38	6°				
S50U-SVZCR/L16		Ø60	[illegible]	[illegible]	350	65	48	4°				
H25R-SVZCR/L16B		Ø34	[illegible]	20.5	200	50	24	6°		X	X	
H32S-SVZCR/L16B		[illegible]	[illegible]	24	250	50	30	8°		SSV32	DTS5-3.5	
H40T-SVZCR/L16B		Ø50	40	28	300	60	38	6°				
H50U-SVZCR/L16B		Ø60	50	33	350	65	48	4°				

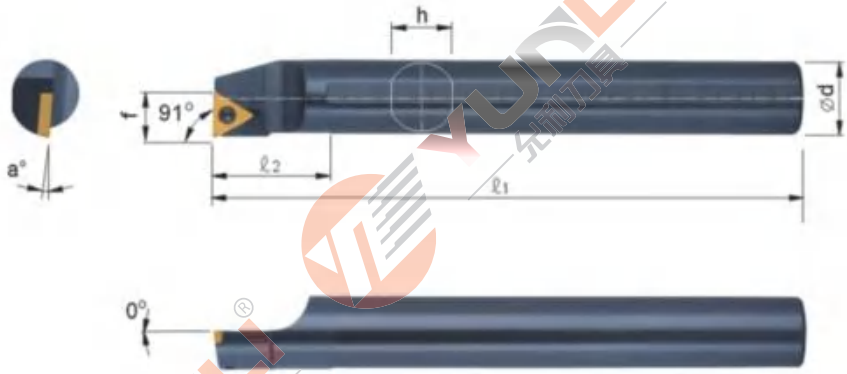

型號	使用刀片	最小加工孔	規格						螺絲	扳手
			Ød	f	ℓ1	ℓ2	h	a°		
S08K-STFCR/L09	TC□□0902□□□	Ø11	8	5	125	23	7	15°	CSTB-2.5	T-8
S10K-STFCR/L09		Ø13	10	6	125	24	9	12°		
S12M-STFCR/L09		Ø16	12	7	150	27	11	10°		
S10K-STFCR/L11	TC□□1102□□□	Ø13	10	6	125	24	9	12°		
S12M-STFCR/L11		Ø16	12	7	150	27	11	10°		
S16N-STFCR/L11		Ø20	16	9	160	30	15	8°		
S20Q-STFCR/L11		Ø25	20	11	180	35	19	6°		
S20Q-STFCR/L16	TC□□16T3□□□	Ø25	20	11.5	180	40	19	8°	CSTB-3.5	T-15
S25R-STFCR/L16		Ø31	25	14	200	40	24	6°		
S32S-STFCR/L16		Ø39	32	17.5	250	45	30	4°		
S40T-STFCR/L16		Ø50	40	21.5	300	55	38	2°		
S50U-STFCR/L16		Ø60	50	26.5	350	60	48	0°		
H08K-STFCR/L09B	TC□□0902□□□	Ø11	8	5	125	23	7	15°	CSTB-2.5	T-8
H10K-STFCR/L09B		Ø13	10	6	125	24	9	12°		
H10K-STFCR/L11B	TC□□1102□□□	Ø13	10	6	125	24	9	12°		
H12M-STFCR/L11B		Ø16	12	7	150	27	11	10°		
H16N-STFCR/L11B		Ø20	16	9	160	30	15	8°		
H20Q-STFCR/L11B		Ø25	20	11	180	35	19	6°		
H20Q-STFCR/L16B	TC□□16T3□□□	Ø25	20	11.5	180	[illegible]	19	[illegible]	CSTB-3.5	T-15
H25R-STFCR/L16B		Ø31	25	14	200	40	24	[illegible]		
H32S-STFCR/L16B		Ø39	32	17.5	250	4[illegible]	3[illegible]	[illegible]		
H40T-STFCR/L16B		Ø50	40	21.5	300	55	38	2°		
H50U-STFCR/L16B		Ø60	50	26.5	350	60	48	0°		
C08K-STFCR/L09	TC□□0902□□□	Ø11	8	5	125	X	7.4	15°	CSTB-2.5	T-8
C10M-STFCR/L09		Ø13	10	[illegible]	150	X	9.4	12°		
C12Q-STFCR/L09		Ø16	[illegible]	7	180	X	11.4	10°		
C10M-STFCR/L11	TC□□1102□□□	Ø13	[illegible]	[illegible]	150	X	9.4	12°		
C12Q-STFCR/L11		Ø[illegible]	12	7	180	X	11.4	10°		
C16R-STFCR/L11		Ø[illegible]	16	9	200	X	15.4	8°		
C20S-STFCR/L11		Ø25	20	11	250	X	19.4	6°		

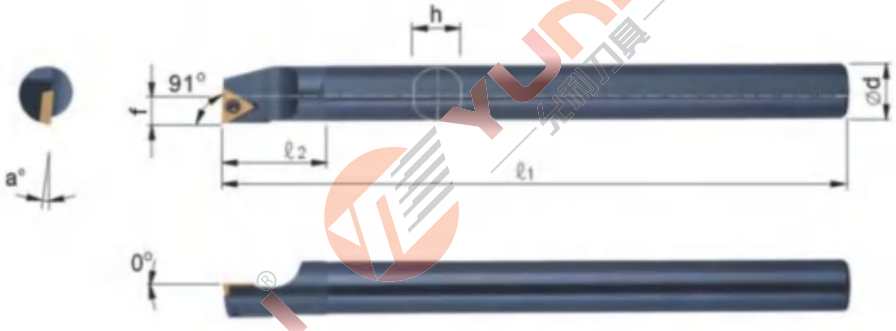

型號	使用刀片	最小加工孔	規格 ød	f	ℓ1	ℓ2	h	a°	螺絲	扳手
S08K-STFPR/L09H09	TP□□0902□□	Ø9	8	4	125	24	7	10°	CSTB-2.5S	T-8
S10K-STFPR/L1102H11	TP□□1102□□	Ø11	10	5.5	125	26	9	8°	CSTB-2.5	
S12M-STFPR/L1103H13	TP□□1103□□	Ø13	12	5	150	28	11	10°	CSTB-2.5L090	
S16N-STFPR/L1103H17		Ø17	16	8.5	160	30	15	8°		

型號	使用刀片	最小加工孔	規格 ød	f	ℓ1	ℓ2	h	a°	螺絲	扳手
S07K-STFPR/L07	TP□□07□□	Ø9	9	4	125	18	7	12°	CSTB-2.2BS	T-7
S07K-STFPR/L07-A07		9	7	4	125	18	7	12°		
S07K-STFPR/L08	TP□□0802□□	9	8	4	125	18	7	12°		
S10K-STFPR/L[illegible]		13	10	6	125	24	9	8°	CSTB-2.2B	
S08K-STFPR/L[illegible]	TP□□0902□□	11	8	5	125	23	7	10°	CSTB-2.5S	T-8
S10K-STFPR/L09		13	10	6	125	24	9	8°	CSTB-2.5	
S10K-STFPR/L1102	TP□□1102□□	13	10	6	125	24	9	8°		
S12M-STFPR/L1102		16	12	7	150	24	11	6°		
S16N-STFPR/L1102		20	16	9	160	30	15	4°		
S20Q-STFPR/L1102		24	20	11	180	35	19	2°		
S10K-STFPR/L1103	TP□□1103□□	13	10	6	125	27	9	12°	CSTB-2.5L090	
S12M-STFPR/L1103		16	12	7	150	27	11	10°		
S16N-STFPR/L1103		20	16	9	160	30	15	8°		
S20Q-STFPR/L1103		24	20	11	180	35	19	6°		
S10K-STFPR/L1103-3		13	10	6	125	24	9	12°	CSTB-3S	T-9
S12M-STFPR/L1103-3		16	12	7	150	27	11	[illegible]		
S16N-STFPR/L1103-3		20	16	9	160	30	15	8°		
S20Q-STFPR/L1103-3		24	20	11	180	[illegible]	[illegible]	[illegible]	CSTB-3	
S16N-STFPR/L13	TP□□1303□□	20	16	9	160	[illegible]	15	[illegible]		
S20Q-STFPR/L13		24	20	11	180	35	19	[illegible]		
S20Q-STFPR/L1603	TP□□1603□□	24	20	11.5	180	[illegible]	9	[illegible]	CSTB-3.5	T-15
S25R-STFPR/L1603		31	25	14	200	40	[illegible]	4°		
S20Q-STFPR/L16T3	TP□□16T3□□	24	20	11.5	180	40	19	4°		
S25R-STFPR/L16T3		31	25	14.5	200	40	24	2°		
C07K-STFPR/L07	TP□□0701□□	9	8	4	125	X	7.4	12°	CSTB-2.2BS	T-7
C07K-STFPR/L07-A07		9	7	[illegible]	125	X	7.4	12°		
C08K-STFPR/L09	TP□□0902□□	11	[illegible]	5	125	X	7.4	10°	CSTB-2.5S	T-8
C10M-STFPR/L09		13	[illegible]	6	125	X	9.4	8°	CSTB-2.5	
C10M-STFPR/L1102	TP□□1102□□	13	10	6	125	X	9.4	8°		
C12Q-STFPR/L1102		[illegible]	[illegible]	7	150	X	11.4	6°		
C16R-STFPR/L1102		[illegible]	16	9	200	X	15.4	4°		
C20S-STFPR/L1102		24	20	11	250	X	19.4	2°		
C10M-STFPR/L1103-3	TP□□1103□□	13	10	6	125	X	9.4	12°	CSTB-3S	T-9
C12Q-STFPR/L1103-3		16	12	7	150	X	11.4	10°		
C16R-STFPR/L1103-3		20	16	9	200	X	15.4	8°	CSTB-3	
C20S-STFPR/L1103-3		24	20	11	250	X	19.4	6°		

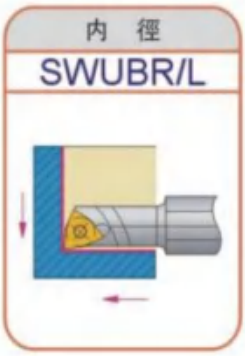

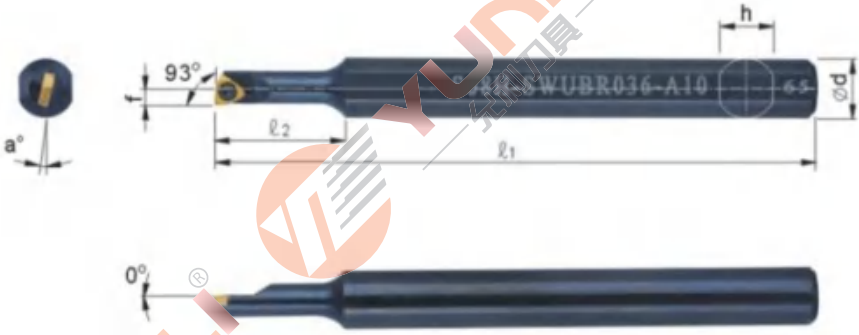

型號	使用刀片	最小加工孔	規格 d	l	ℓ1	ℓ2	h	a°	螺絲	扳手
S06H-SWUBR/L036	WB□□0301□□	Ø6	6	3	100	18	7	15°	CSTB-2S	T-6
S06H-SWUBR/L036-A10		Ø6	10	3	100	18	9	15°		
S06H-SWUBR/L036-A12		Ø6	12	3	100	18	11	15°		
S06H-SWUBR/L036-A16		Ø6	16	3	100	18	15	15°		
S08H-SWUBR/L036		Ø6	8	3	100	18	7	15°		
S06H-SWUBR/L036-A10		Ø6	10	3	100	18	9	15°		
S06H-SWUBR/L037		Ø7	8	3.5	100	20	7	12°	CSTB-2	
S06H-SWUBR/L037-A10		Ø7	10	3.5	100	20	9	12°		
S06H-SWUBR/L037		Ø7	8	3.5	100	20	7	12°		
S06H-SWUBR/L037-A10		Ø7	10	3.5	100	20	9	12°		
S06H-SWUBR/L06	WB□□0601□□	Ø6	8	3.25	100	15	7	15°	CSTB-2S	
S07H-SWUBR/L06		Ø7	8	3.5	125	18	7	12°	CSTB-2	
S08H-SWUBR/L08	WB□□0802□□	Ø8	8	4	100	20	7	17°		
H06H-SWUBR/L036B	WB□□0301□□	Ø6	8	3	100	18	7	15°	CSTB-2S	
H06H-SWUBR/L036B-A10		Ø6	10	3	100	18	9	15°		
H06H-SWUBR/L036B-A12		Ø6	12	3	100	18	11	15°		
H06H-SWUBR/L036B-A16		Ø6	16	3	100	18	15	15°		
H08H-SWUBR/L036B		Ø6	8	3	100	18	7	15°		
H08H-SWUBR/L036B-A10		Ø6	10	3	100	18	9	15°		
H06H-SWUBR/L037B		Ø7	8	3.5	100	20	7	12°	CSTB-2	
H06H-SWUBR/L037B-A10		Ø7	10	3.5	100	20	9	12°		
H08H-SWUBR/L037B		Ø7	8	3.5	100	20	7	12°		
H08H-SWUBR/L037B-A10		Ø7	10	3.5	100	20	9	12°		
H06H-SWUBR/L06B	WB□□0601□□	Ø6	8	3.25	100	15	7	15°	CSTB-2S	
H07H-SWUBR/L06B		Ø7	8	3.5	125	18	7	12°	CSTB-2	
H08H-SWUBR/L08B	WB□□0802□□	Ø8	8	4	100	20	7	17°		
C06K-SWUBR/L036	WB□□0301□□	Ø6	8	3	125	30	7.4	15°	CSTB-2S	
C06K-SWUBR/L036-20L		Ø6	8	3	125	20	7.4	15°		
C06K-SWUBR/L036-25L		Ø6	8	3	125	25	7.4	15°		
C06K-SWUBR/L037		Ø7	8	3.5	125	40	7.4	12°	CSTB-2	
C06K-SWUBR/L037-20L		Ø7	8	3.5	125	20	7.4	12°		
C06K-SWUBR/L037-25L		Ø7	8	3.5	125	25	7.4	12°		

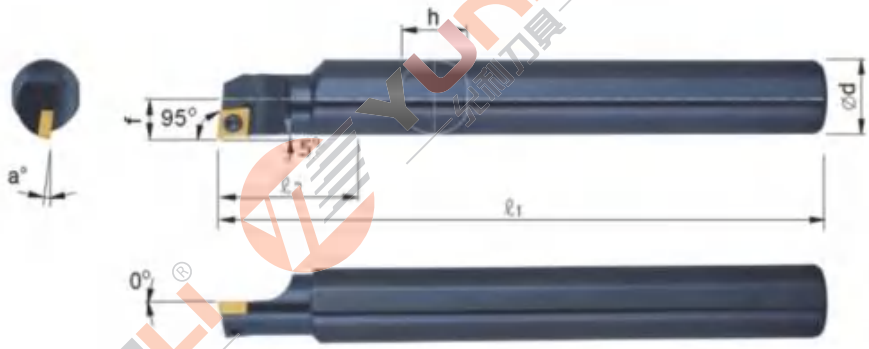

型號	使用刀片	最小加工孔	規格						螺絲	扳手
			d	f	ℓ1	ℓ2	h	a°		
H09N-SCLCR/L06-16PB	CC□□0602□□	Ø12	11	9	160	20	15	12°	CSTB-2.5S	T-8
H12N-SCLCR/L06-16PB		Ø16	16	9	160	20	15	12°	CSTB-2.5	
S16N-SCLCR/L09-20P	CC□□09T3□□	Ø20	20	11.5	160	22	15	10°	CSTB-3.5	T-15
S20Q-SCLCR/L09-25P		Ø25	25	14	180	24	19	8°		

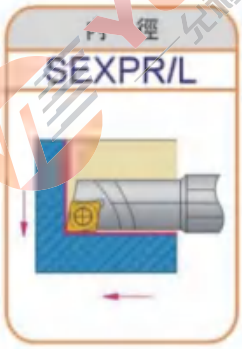

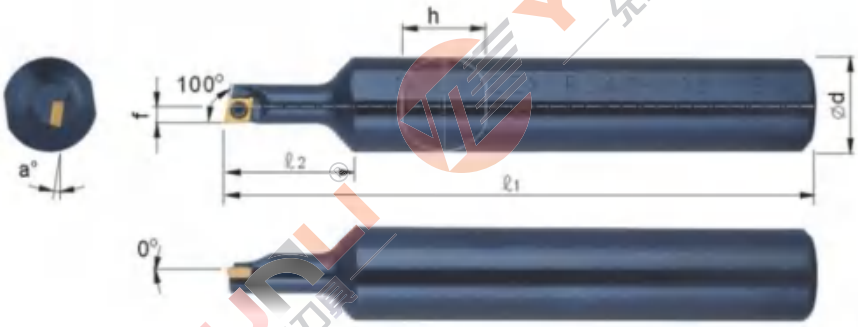

型號	使用刀片	最小加工孔	規格						螺絲	扳手
			d	f	ℓ1	ℓ2	h	a°		
S08H-SEXPR/L045	EP□□0401□□	Ø5.5	8	2.85	100	20	7	12°	CSTB-2S	T-6
S08H-SEXPR/L045-A10		Ø5.5	10	2.85	100	20	9	12°		
S08H-SEXPR/L045-A16		Ø5.5	16	2.85	100	20	15	12°		
S08H-SEXPR/L047		Ø7	8	3.55	100	20	7	12°	CSTB-2	
S08H-SEXPR/L047-A10		Ø7	10	3.55	100	20	9	12°		
S08H-SEXPR/L047-A16		Ø7	16	3.55	100	20	15	12°		
H08H-SEXPR/L045B		Ø5.5	8	2.85	100	20	7	12°	CSTB-2S	
H08H-SEXPR/L045B-A10		Ø5.5	10	2.85	100	20	9	12°		
H08H-SEXPR/L045B-A16		Ø5.5	16	2.85	100	20	15	12°		
H08H-SEXPR/L047B		Ø7	8	3.55	100	20	7	12°	CSTB-2	
H08H-SEXPR/L047B-A10		Ø7	10	3.55	100	20	9	12°		
H08H-SEXPR/L047B-A16		Ø7	16	3.55	100	20	15	12°		
C08H-SEXPR/L045		Ø5.5	8	2.85	125	40	7.4	12°	CSTB-2S	
C08H-SEXPR/L047		Ø7	8	3.55	125	70	7.4	12°	CSTB-2	

YUNLI 允利刀具

MGMN/MGGN/MRMN

形状 图示方向为右手（R）刀	型号	规格尺寸（mm）					库存	
		b	r	l	d	t	YL10	YL930
	MGMN150-G	1.5	0.15	16.0	1.2	3.5	●	●
	MGMN200-G	2.0	0.20	16.0	1.6	3.5	●	●
	MGMN250-G	2.5	0.25	18.5	2.0	3.85	●	●
	MGMN300-G	3.0	0.30	21.0	2.35	4.8	●	●
	MGMN400-G	4.0	0.40	21.0	3.3	4.8	●	●
	MGMN500-G	5.0	0.50	26.0	4.1	5.8	●	●
	MGMN600-G	6.0	0.60	26.0	5.0	5.8	●	●
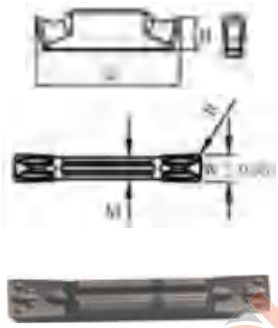	MGMN200-M	2.0	0.20	16.0	1.2	3.5	●	●
	MGMN250-M	2.5	0.25	18.5	2.0	3.85	●	●
	MGMN300-02-M	3.0	0.30	21.0	2.35	4.8	●	●
	MGMN300-M	3.0	0.30	21.0	2.35	4.8	●	●
	MGMN350-03-M	3.5	0.35	21.0	2.9	4.8	●	●
	MGMN400-02-M	4.0	0.40	21.0	3.3	4.8	●	●
	MGMN400-M	4.0	0.40	21.0	3.3	4.8	●	●
	MGMN500-04-M	5.0	0.50	26.0	4.1	5.8	●	●
	MGMN500-M	5.0	0.50	26.0	4.1	5.8	●	●
	MGMN600-M	6.0	0.60	26.0	5.0	5.8	●	●
	MGMN800-M	8.0	0.80	31.0	6.0	6.5	●	●
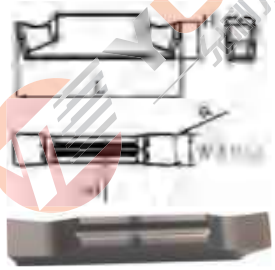	MGGN200-S	2.0	0.20	16.0	1.60	3.5	●	●
	MGGN300-S	3.0	0.30	21.0	2.35	4.8	●	●
	MGGN400-S	4.0	0.40	21.0	3.3	4.8	●	●
	MGGN500-S	5.0	0.50	26.0	4.1	5.8	●	●
	MGGN200R/L-15D-S	2.0	0.20	16.0	1.60	3.5	●	●
	MGGN300R/L-15D-S	3.0	0.30	21.0	2.35	4.8	●	●
	MGGN400R/L-15D-S	4.0	0.40	21.0	3.3	4.8	●	●
	MGGN500R/L-15D-S	5.0	0.50	26.0	4.1	5.8	●	●
	MGMN200-T	2.0	0.20	16.0	1.60	3.5	●	●
	MGMN300-T	3.0	0.30	21.0	2.35	4.8	●	●
	MGMN400-T	4.0	0.40	21.0	3.3	4.8	●	●
	MGMN500-T	5.0	0.50	26.0	4.1	5.8	●	●
	MRGN400-A	4.0	0.40	21.0	3.3	4.8	●	●
	MRGN500-A	5.0	0.50	26.0	4.1	5.8	●	●
	MRGN600-A	6.0	0.60	26.0	5.0	5.8	●	●
	MRGN800-A	8.0	0.80	31.0	6.0	6.5	●	●
	MRMN200-M	2.0	0.20	16.0	1.50	3.5	●	●
	MRMN300-M	3.0	0.30	21.0	2.35	4.8	●	●
	MRMN400-M	4.0	0.40	21.0	3.3	4.8	●	●
	MRMN500-M	5.0	0.50	26.0	4.1	5.8	●	●
	MRMN600-M	6.0	0.60	26.0	5.0	5.8	●	●
	MRMN800-M	8.0	0.80	31.0	6.0	6.5	●	●

XGR/L槽刀系列

形状	型号一	型号二	刃宽(MM)	有效切深(MM)	R角
 图示方向为右手 (R) 刀	XGR6310S	XGL6310S	1.0	1.5	0.0
	XGR6310-02	XGL6310-02			0.2
	XGR6315S	XGL6315S	1.5	2.3	0.0
	XGR6315-02	XGL6315-02			0.2
	XGR6320S	XGL6320S	2.0	3	0.0
	XGR6320-02	XGL6320-02			0.2
	XGR6325S	XGL6325S	2.5	3.8	0.0
	XGR6325-02	XGL6325-02			0.2
	XGR6330S	XGL6330S	3.0	4.5	0.0
	XGR6330-02	XGL6330-02			0.2
	XGR6335S	XGL6335S	3.5	5.3	0.0
	XGR6335-02	XGL6335 02			0.2
	XGR6340S	XGL6340S	4.0	6.0	0.0
	XGR6340-02	XGL6340-02			0.2
	XGR6345S	XGL6345S	4.5		0.0
	XGR6345-02	XGL6345-02			0.2

MGEHR/L

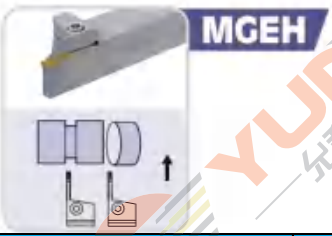

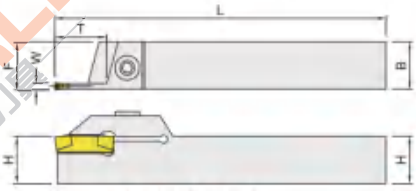

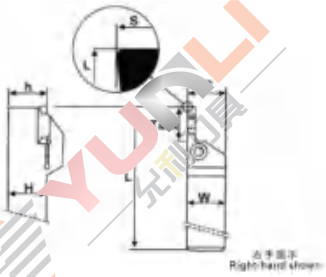

形状	刀杆型号	使用刀片	尺寸(mm) H=(h)	W	L	S	T(max)	紧固螺丝	扳手
 图示方向为右手 (R) 刀	MGEHR/L1616-2	MGMN200-G	16	16	100	16.25	14.5	BHA0616	L5.0
	MGEHR/L2020-2		20	20	125	20.25	14.5		
	MGEHR/L2525-2	MGMN200-M	25	25	150	25.25	14.5		
	MGEHR/L2020-2.5	MGMN250-G	20	20	125	20.30	16.5	MHA0512	L5.0
	MGEHR/L2525-2.5	MGMN250-M	25	25	150	25.30	16.5		
	MGEHR/L1616-3	MBMN300-M	16	16	100	16.35	18.5	BHA0616	L5.0
	MGEHR/L2020-3	MGGN300-££-M	20	20	125	20.45	18		
	MGEHR/L2525-3	MRMN300-M	25	25	150	25.40	18		
	MGEHR/L3232-3		32	32	170	32.40	18		
	MGEHR/L2020 4	MGMN400-M	20	20	125	20.40	18	BHA0616	L5.0
	MGEHR/L2525-4	MGGN400-££-M	25	25	150	25.40	18		
	MGEHR/3232-4	MRMN400-M	32	32	170	32.40	18		
	MGEHR/L2020-5	MGMN500-M	20	20	150	20.50	23	BHA0616	L5.0
	MGEHR/L2525-5	MGGN500-££-M	25	25	150	25.50	23		
	MGEHR/L3232-5	MRMN500-M	32	32	170	32.50	23		

GMM

形状	型号	尺寸（mm）						材质		
		W	r E	M	L	H	θ	YL10	YL930	YL740
 图示方向为右手（R）刀	GMM1520-MT	1.5	0.05	1.2	20	4.3	-	●	●	●
	GMM2020-MT	2.0	0.05	1.5				●	●	●
	GMM2520-MT	2.5	0.05	1.9				●	●	●
	GMM3020-MT	3.0	0.05	2.3				●	●	●
	GMM1520R/L-MT-15D	1.5	0.05	1.2	20	4.3	15°	●	●	●
	GMM2020R/L-MT-15D	2.0	0.05	1.5			15°	●	●	●
	GMM2520R/L-MT-15D	2.5	0.05	1.9			15°	●	●	●
	GMM3020R/L-MT-15D	3.0	0.05	2.3			15°	●	●	●
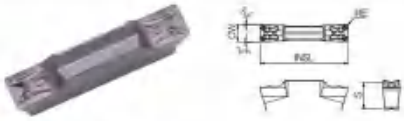		CW	S	RE	INSL	CW (MIN)	CW (MAX)			
	GDM 3015N-040GMI	3	4.6	0.4	15.5	-0.03	+0.03	●	●	●

KGM型（自动车床用）

刃宽：1.5～4.0mm

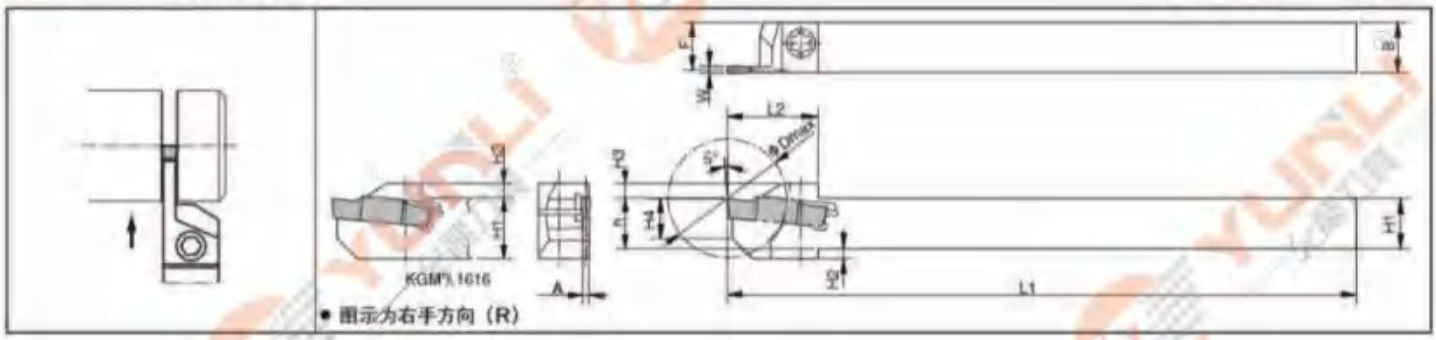

形状	型号		最小加工径Φ dmax	尺寸(mm)									刃宽 R（mm）		零件		库存	
				H1=h	H2	H3	H4	B	L1	L2	F	A	MIN.	MAX.	紧固螺钉	扳手	R	L
 图示方向为右手（R）刀	KGMR/L	1010JX-1.5	20	10	2	3	8	10	120	18	9.4	1.2	1.5	2.0	SE-40120TR	LTW-15S	●	●
		1212JX-1.5	25	12	2	4	10	12	120	20.5	11.4	1.2	1.5	2.0			●	●
	KGMR/L	1010JX-2	20	10	2	3	8	10	120	18	9.15	1.7	2.0	3.0	SE-40121TR	LTW-15S	●	●
		1212JX-2	25	12	2	4	10	12	120	19	11.15	1.7	2.0	3.0			●	●
		1616JX-2	32	16	-	4	9	16	120	24.5	15.15	1.7	2.0	3.0	SE-50125TR	LTW-20	●	●
	KGMR/L	1010JX-2.5	20	10	2	3	8	10	120	18	9	2.0	2.4	3.0	SE-40120TR	LTW-15S	●	●
		1212JX-2.5	25	12		4	10	12	120	20.5	11	2.0	2.4	3.0			●	●
		1616JX-2.5	32	16	-	4	9	16	120	25.5	15	2.0	2.4	3.0	SE-50125TR	LTW-20	●	●
	KGMR/L	1616JX-3	32	16		4	9	16	120	25.5	14.8	2.4	3.0	4.0	SE-50125TR	LTW-20	●	●
		1212F-1.5-85	25	12	2	4	10	12	85	19	11.4	1.2	1.5	2.0	SE-40120TR	LTW-15S	●	●
		1212F-2-85	25	12	2	4	10	12	85		11.15	1.7	2.0	3.0	SE-40120TR	LTW-15S	●	●
		1212F-2.5-85	25	12	2	4	10	12	85		11	2.0	2.4	3.0	SE-40120TR	LTW-15S	●	●

JCGN

形状	型号	尺寸(mm)					库存		
		T	W	L	r ε	θ	YL10	YL930	YL740
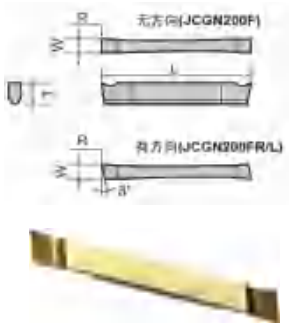 图示方向为右手（R）刀	JCGN200F	3	2	20	0.05	–	●	●	●
	JCGN200FR/L						●	●	●

JCGWSR/L

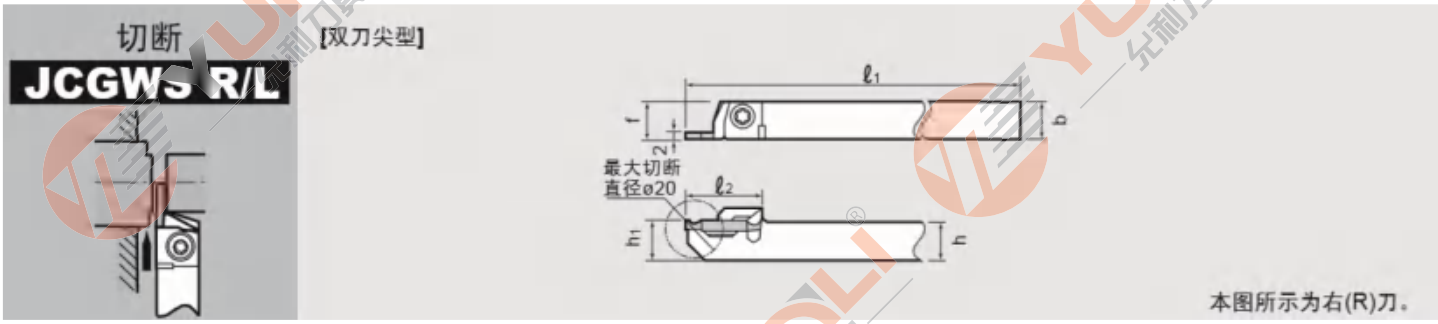

形状	型号	使用刀片	尺寸(mm)							紧固螺钉	扳手		库存	
			h	b	L1	L2	h1	f	最大切断				R	L
 图示方向为右手（R）刀	JCGWSR/L1010K2	JCGN200--	10	10	125	20	10	10	Ø20	CSTB-4S	T-15F	(T-15L)	●	●
	JCGWSR/L1212K2		12	12	125	20	12	12					●	●
	JCGWSR/L1616K2		16	16	125	20	16	16					●	●
	JCGWSR/L2020K2		20	20	150	20	20	20					●	●
	JCGWSR/L25256K2		25	25	150	20	25	25					●	●

TKF12/16/20

形状		型号		尺寸 Dimension (mm)						角度（°）	材质 Grade recommended			
有方向的刀片图示为右手方向（R）		Type		W	Φdmax	r ε	T	H	θd	θ	YL10	YL740	YL930	YL60
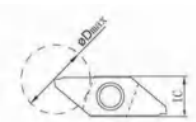 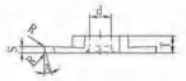  图示方向为右手（R）刀		TKF12R/L	050-S-16DR	0.5	5	0 03	3	8.7	5	16°	●		●	○
			070-S-16DR	0.7	8						●		●	○
			100-S-16DR	1.0	12						●		●	○
			125-S-16DR	1.25							●		●	○
			150-S-16DR	1.5							●		●	○
			200-S-16DR	2.0							●		●	○
		TKF16R/L	150-S-16DR	1.5	16	0.05	4	9.5	5	16°	●		●	○
			200-S-16DR	2.0							●		●	○
		TKF20R/L	150-S-16DR	1.5	20	0.05	4	9.5	5	16°	●		●	○
			200-S-16DR	2.0							●		●	○
		TKF12R/L	050-S	0.5	5	0.03	3	8.7	5	0°	●		●	○
			070-S	0.7	8						●		●	○
			100-S	1.0	12						●		●	○
			125-S	1.25							●		●	○
			150-S	1.5							●		●	○
			200-S	2.0							●		●	○
		TKF16R/L	150-S	1.5	16	0.05	4	9.5	5	0°	●		●	○
			200-S	2.0							●		●	○
		TKF20R/L	150-S	1.5	20	0.05	4	9.5	5	0°	●		●	○
			200-S	2.0							●		●	○
		TKF12R/L	100-T-16DR	1.0	12	0.08	3	8.7	5	16°	●		●	○
			150-T-16DR	1.5							●		●	○
			200-T-16DR	2.0							●		●	○
		TKF16R/L	150-T-16DR	1.5	16	0.08	4	9.5	5	16°	●		●	○
			200-T-16DR	2.0							●		●	○
		TKF20R/L	150-T-16DR	1.5	20	0.08	4	9.5	5	16°	●		●	○
			200-T-16DR	2.0							●		●	○
		TKF12R/L	050-NB-20DR	0.5	5	0	3	8.7	5	20°	●		●	○
			070-NB-20DR	0.7	8						●		●	○
			100-NB-20DR	1.0	12						●		●	○
			150-NB-20DR	1.5							●		●	○
			200-NB-20DR	2.0							●		●	○
		TKF16R/L	150-NB-20DR	1.5	16	0	4	9.5	5	20°	●		●	○
			200-NB-20DR	2.0							●		●	○
		TKF20R/L	150-NB-20DR	1.5	20	0	4	9.5	5	20°	●		●	○
			200-NB-20DR	2.0							●		●	○
		TKF12R/L	050-NB	0.5	5	0	3	8.7	5	0°	●		●	○
			070-NB	0.7	8						●		●	○
			100-NB	1.0	12						●		●	○
			150-NB	1.5							●		●	○
			200-NB	2.0							●		●	○
		TKF16R/L	150-NB	1.5	16	0	4	9.5	5	0°	●		●	○
			200-NB	2.0							●		●	○
		TKF20R/L	150-NB	1.5	20	0	4	9.5	5	0°	●		●	○
			200-NB	2.0							●		●	○

TKFB

形状	型号	尺寸							材质		
		w	a	B	T	H	⌀d	r ε	YL10	YL930	YL740
 图示方向为右手（R）刀	TKFB12R/L15005M	1.5	0.25	2.6	3	8.7	5.2	0.05	●	●	●
	TKFB12R/L28005M	2.8	0.3	4.6				0.10	●	●	●
	TKFB12R/L28010M							0.15	●	●	●
	TKFB16R/L38005M	3.8	0.3	6.3	4	9.5		<0.05	●	●	●
	TKFB16R/L38010M							<0.15	●	●	●

TKFT12

形状	型号	适用螺纹	螺距 mm	螺距 牙/英寸	尺寸(mm) T	W	H	Φd	r ε	S1	S2	角度° θ	库存 YL10	YL740	YL930
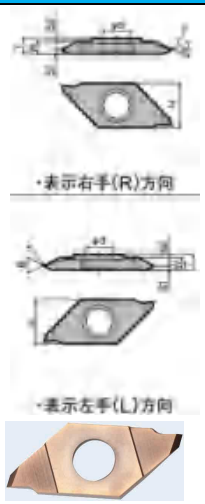	TKFT12R6000	M UN	0.2～0.6	64～48	3.0	2.5	8.7	5 2	Max0 05	0 4	2.1	60°	●	●	●
	12RB6000								平滑	2.1	0.4		●	●	●
	12RA60005		0.5～1.25	48～24					0.05	0.8	1.7		●	●	●
	12RB60005									1.7	0.8		●	●	●
	12RN6001		1～1.5	24～18					0.1	1.25	1.25		●	●	●
	12RA55005	G,R W	-	40～16					0.05	0.8	1.7	55°	●	●	●
	12RB55005									1.7	0.8		●	●	●
	TKFT12LA6000	M UN	0.2～0.6	64～48	3.0	2.5	8.7	5.2	Max0.05	2.1	0.4	60°	●	●	●
	12LB6000								平滑	0.4	2.1		●	●	●
	12LA60005		0.5～1.25	48～24					0.05	1.7	0.8		●	●	●
	12LB60005									0.8	1.7		●	●	●
	12LN6001		1～1.5	24～18					0.1	1.25	1.25		●	●	●
	12LA55005	G,R W	-	40～16					0.05	1.7	0.8	55°	●	●	●
	12LB55005									0.8	1.7		●	●	●

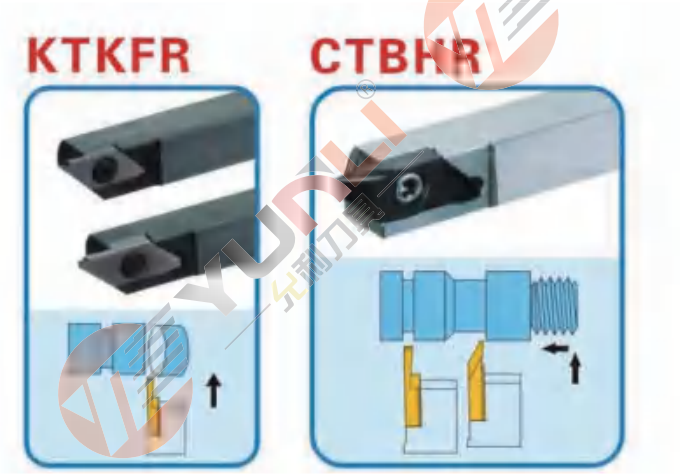

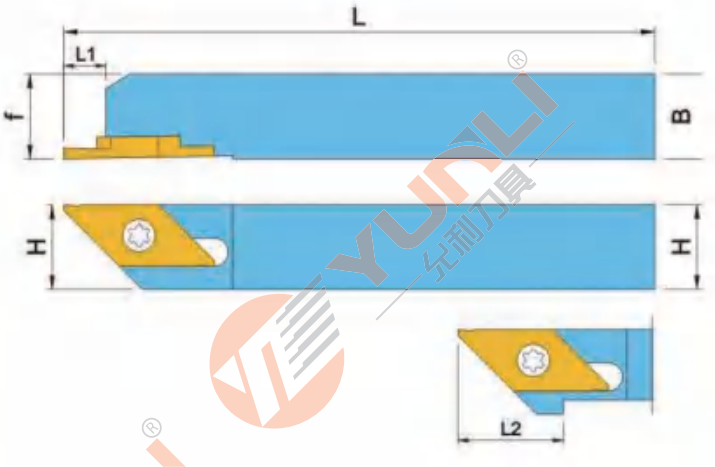

形状	型号		尺寸(mm) H1=h	B	L1	L2	F1	T	零件 紧固螺钉	扳手	适用刀片	库存 R	L
 图示方向为右手（R）刀	KTKFR/L	1010JX-12	10	10	120	15	10	6	SB-4590TRWN	LTW-10S	TKFT12R/L... TKFB12R/L... TKF12R/L...	●	●
		1212JX-12	12	12		-	12					●	●
		1616JX-12	16	16			16					●	●
		2020JX-12	20	20			20					●	●
		1212F-12	12	12	85		12	6	SB-4590TRWN	LTW-10S		●	●
 图示方向为右手（R）刀	KTKFSR/L	1216JX-12	12	16	120		16	6	SB-4590TRWN	LTW-10S		●	●
		1620JX-12	16	20			20	6				●	●

JXG

形状	型号	尺寸（mm）						材质		
		Ød	T	+0.025 w	θ	最大槽深	r ε	YL10	YL930	YL740
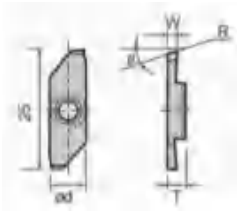  图示方向为右手（R）刀	JXGR/L8070A	8	3.97	0.7	15°	4.5	0.00	●	●	●
	JXGR/L8070FA-005			0.7			0.05	●	●	●
	JXGR/L8100F			1.0		6.0	0.00	●	●	●
	JXGR/L8100FA-005A			1.0			0.05	●	●	●
	JXGR/L8100FA45			1.0		4.5	0.00	●	●	●
	JXGR8100FA45-005A			1.0			0.05	●	●	●
	JXGR/L8120FA			1.2		6.0	0.00	●	●	●
	JXGR/L8150FA			1.5			0.00	●	●	●
	JXGR/L8150FA-005			1.5			0.05	●	●	●
	JXGR/L8150FA50			1.5		5.0	0.00	●	●	●
	JXGR/L8150FA50-005			1.5			0.05	●	●	●
	JXGR/L8180FA			1.8		6.0	0.00	●	●	●
	JXGR/L8180FA-005			1.8			0.05	●	●	●
	JXGR/L8200FA			2.0			0.00	●	●	●
	JXGR/L8200FA-005						0.05	●	●	●
	JXGR/L8200FN				0°		0.00	●	●	●
	JXGR/L8200FN-005						0.03	●	●	●

JXT

形状	型号	尺寸(mm)					库存		
		θ	Ød	s	r ε	牙距	YL10	YL930	YL740
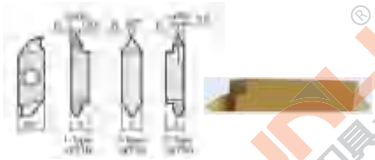 图示方向为右手（R）刀	JXT1R/L6000F	60°	8	3.97	0.03	0.5-1.0	●	○	●
	JXT2R/L6000F					0.5-1.0	●	○	●
	JXT3R/L6000F					0.5-1.0	●	○	●

JXF

形状	型号	尺寸				库存		
		Ød	T	r ε	最大切深	YL10	YL930	YL740
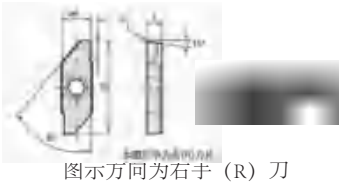 图示方向为右手（R）刀	JXFR/L8000F	8	3.97	0.03	5.5	●	○	●
	JXFR/L8010F			0.1	5.5	●	○	●

JXR

形状	型号	尺寸				库存		
		Ød	T	r ε	最大切深	YL10	YL930	YL740
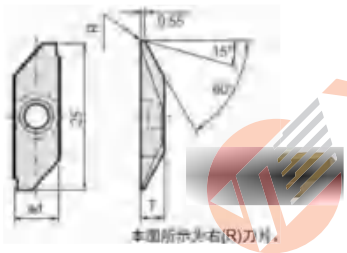	JXRR/L8000F	8	3.97	0.03	5.5	●	○	●
	JXRR/L8010F			0.1	5.5	●	○	●

JSXG

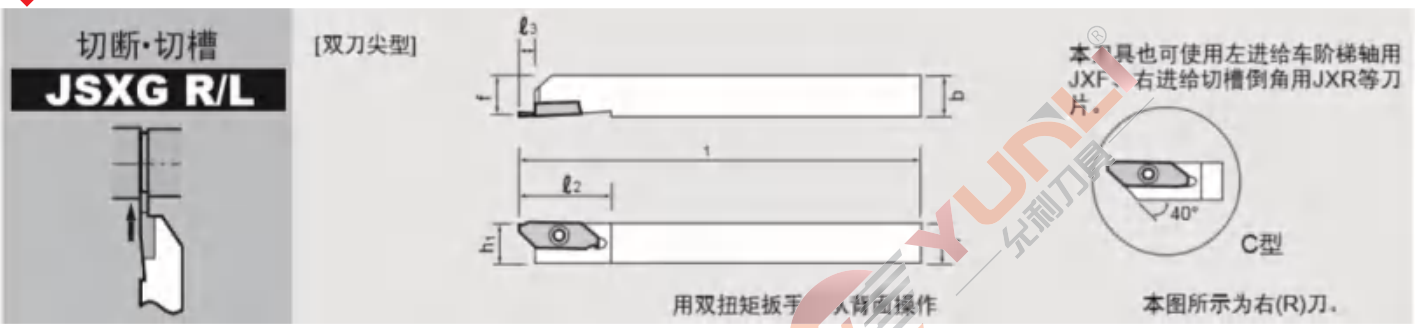

形状	型号	尺寸							使用刀片	紧固螺钉	扳手		库存	
		h	b	L1	L2	ar	h1	f					R	L
	JSXGR/L1010K8-C	10	10	125	29	6.7	10	9.9	JXFR/L8____ JXRR/L8____	CSTB-4SD	T-8F	(T-8L)	●	○
	JSXGR/L1212K8-C	12	12	125	29	6.7	12	11.9					●	○
	JSXGR/L1616K8	16	16	125	29	6.5	16	15.9					●	○
	JSXGR/L2020K8	20	20	125	29	6.5	20	19.9					●	○
图示方向为右手（R）刀	JSXGR/L2525K8	25	25	125	29	6.5	25	24.9					●	○

CTP

刀尖形状	型号	最大切断直径(mm)⌀D	尺寸（mm）				库存		
			w	L	θ	r ε	YL10	YL930	YL740
	CTP05FR-SH	5.0	0.5	2.8	15 °	0.03	●	●	●
	CTP07FR	8.0	0.7	4.5	16 °	0.05	●	●	●
	CTP10FR	12.0	1.0	6.7			●	●	●
	CTP10FR-SH	7.0	1.0	4.1	15 °		●	●	●
	CTP15FR	12.0	1.5	6.7	16 °		●	●	●
	CTP20FR		2.0				●	●	●
	CTP05FRN-SN	5.0	0.5	2.8	0 °	0.03	●	●	●
	CTP10FRN	12.0	1.0	6.7		0.05	●	●	●
	CTP10FRN-SH	7.0	1.0	4.1			●	●	●
	CTP15FRN	12.0	1.5				●	●	●
	CTP20FRN		2.0				●	●	●
	CTP10FRK	11.0	1.0	6.7	16 °		●	●	●
	CTP15FRK		1.5				●	●	●
	CTP20FRK		2.0				●	●	●
	CTP07FL	8.0	0.7	4.5	16 °	0.05	●	●	●
	CTP10FL	12.0	1.0	6.7			●	●	●
	CTP15FL		1.5				●	●	●
	CTP20FL		2.0				●	●	●
	CTP05FLK-SH	5.0	0.5	2.8	0 °	0.03	●	●	●
	CTP10FLK	12.0	1.0	6.7		0.05	●	●	●
	CTP10FLK-SH	7.0	1.0	4.1			●	●	●
	CTP15FLK	12.0	1.5	6.7			●	●	●
图示方向为右手（R）刀	CTP20FLK		2.0				●	●	●
	CTP05FLK-SH	5.0	0.5	2.8	17 °	0.03	●	●	●
	CTP10FLK	11.0	1.0	6.7	16 °	0.05	●	●	●
	CTP10FLK-SH	7.0	1.0	4.1	17 °		●	●	●
	CTP15FLK	11.0	1.5	6.7	16 °		●	●	●
	CTP20FLK		2.0				●	●	●
	CTP15FLKB		1.5				●	●	●

CTPA

形状	型号	最大切断直径(mm)⌀D	尺寸（mm）				库存		
			w	L	θ	r ε	YL10	YL930	YL740
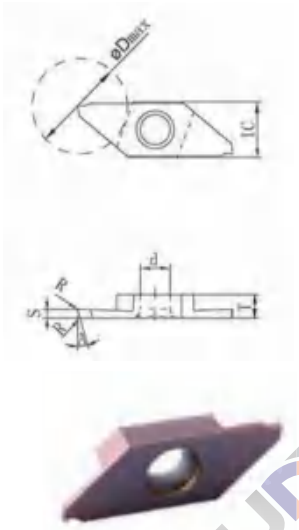	CTPA07FR	8.0	0.7	4.5	16 °	0.05	●	●	●
	CTPA10FR	12.0	1.0	6.7			●	●	●
	CTPA15FR	16.0	1.5	9 2			●	●	●
	CTPA20FR		2.0				●	●	●
	CTPA07FRN	8.0	0.7	4.5	0 °	0.05	●	●	●
	CTPA10FRN	12.0	1.0	6.7.			●	●	●
	CTA15FRN	16.0	1.5	9.2			●	●	●
	CTPA20FRN		2.0				●	●	●
	CTPA20FRN-P					0.1	●	●	●
	CTPA30FRN		3.0			0.05	●	●	●
	CTPA07FL	8.0	0.7	4.5	16 °	0.05	●	●	●
	CTPA10FL	12.0	1.0	6.7			●	●	●
	CTPA15FL	16.0	15.0	9.2			●	●	●
	CTPA20FL		2.0				●	●	●
	CTPA10FLN	12.0	1.0	6.7			●	●	●
	CTPA10FLND	16.0		9.2	0 °		●	●	●
	CTPA15FLN		1.5				●	●	●
	CTPA20FLN		2.0				●	●	●
	CTPA20FLN-P					0.1	●	●	●
	CTPA30FLN		3.0			0.05	●	●	●
图示方向为右手（R）刀	CTPA07FLK	6.5	0.7	4.5	16 °	0 05	●	●	●
	CTPA10FLK	11.0	1.0	6.7			●	●	●
	CTPA10FLKD	16.0		9.2			●	●	●
	CTPA15FLK	14.5	1.5				●	●	●
	CTPA20FLK		2.0				●	●	●

形状	型号	最大切断直径(mm)⌀D	尺寸（mm）				库存		
			w	L	θ	r ε	YL10	YL930	YL740
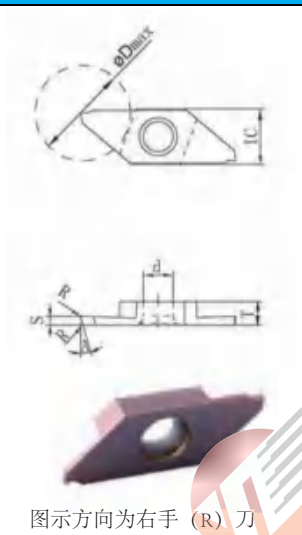	CTPA20FRS	16	2	9.2	0 °	0.05	●	●	●
	CTPA20FRV				20 °	0	●	●	●
	CTPA20FRNV				0 °		●	●	●
	CTPA20FLS	16	2	9.2	0 °	0.05	●	●	●
	CTPA20FLV				20 °	0	●	●	●
	CTPA20FLNV				0 °		●	●	●
图示方向为右手（R）刀	CTPA20FLKV	14.5			20 °		●	●	●

TTP

形状	型号	尺寸（mm）				适用螺纹	库存	
		齿数	θ	f	r ε	螺距	R	L
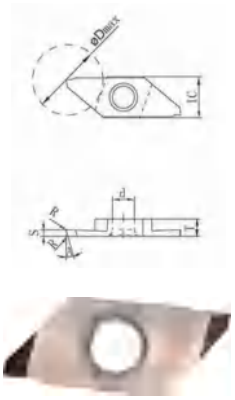 图示方向为右手（R）刀	TTP60FR4A	-	60 °	0.4	0.05MAX 平头	0.2-0.75	●	●
	TTP60FR4AS						●	●
	TTP60FR8A			0.8	R0.05	0.4-1.25	●	●
	TTP60FR8AS						●	●
	TTP55FR8A	48-16	55 °			0.2-0.75	●	●
	TTP60FR4B	-	60 °	0.4	0.05MAX 平头	0.2-0.75	●	●
	TTP60FR4BS						●	●
	TTP60FR8B			0.8	R0.05	0.4-1.25	●	●
	TTP60FR8BS						●	●
	TTP55FR8B	48-16	55 °			0.2-0.75	●	●
	TTP60FR-N	-	60 °	1.25	R0.1	1.0-1.5	●	●
	TTP60FR-NS						●	●
	TTP60FR-N02				R0.2	1.5-2.0	●	●
	TTP60FL4A	-	60 °	0.4	0.05MAX 平头	0.2-0.75	●	●
	TTP60FL4AS						●	●
	TTP60FL8A			0.8	R0.05	0.4-1.25	●	●
	TTP60FL8AS						●	●
	TTP55FL8A	48-16	55 °			0.2-0.75	●	●
	TTP60FL4B	-	60 °	0.4	0.05MAX 平头	0.2-0.75	●	●
	TTP60FL4BS						●	●
	TTP60FL8B			0.8	R0.05	0.4-1.25	●	●
	TTP60FL8BS						●	●
	TTP55FL8B	48-16	55 °			0.2-0.75	●	●
	TTP60FL-N	-	60 °	1.25	R0.1	1.0 1.5	●	●
	TTP60FL-NS						●	●
	TTP60FL-N02				R0 2	1.5-2.0	●	●

TTPS

形状	型号	适用螺纹	尺寸（mm）		库存	
		螺距	f	r ε	R	L
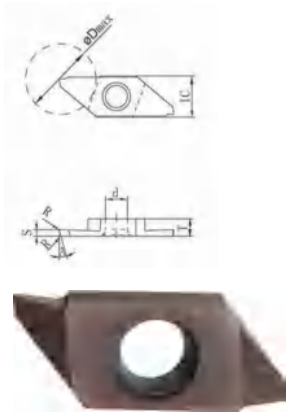 图示方向为右手（R）刀	TTPS60FR4A	0.2-0.75	0.4	0.05MAX	●	●
	TTPS60FR4B				●	●
	TTPS60FR8A	0.5-1.25	0.8	0.05	●	●
	TTPS60FR8B				●	●
	TTPS60FR-N	0.1	1.25	0.1	●	●

TBPS

形状	型号	排屑槽	有效切刃长a	可加工深度	尺寸（mm）		库存	
					θ	r ε	R	L
 图示方向为右手（R）刀	TBPS60FR00	有	3.1	3.5	60°	0	●	●
	TBPS60FR10					0.1	●	●
	TBPS60FRV	无	4.8	4.8	60°	0	●	●

最大切断直径 ϕ12

CTP型

表里共同拧紧

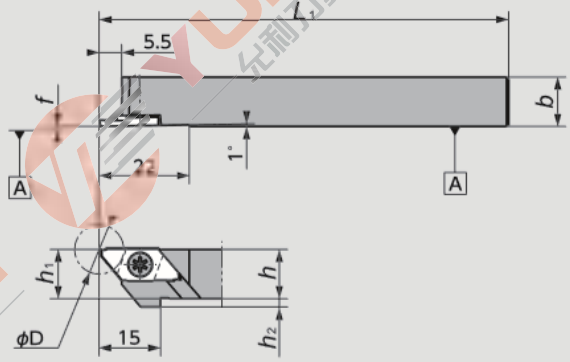

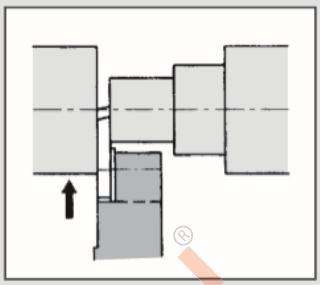

图示为右手刀（R）

形状	刀杆型号	最大切断直径(mm)	尺寸(mm)						零部件		适用刀片
			h	b	L1	h1	h2	f	紧固螺丝	扳手	
	CTPR/L 08	12.0	8	10	120	8	4	0.0	LRIS-4*10PW	CLR-15S	CTP
	CTPR/L 10H		10	10	100	10	2				
	CTPR/L 10		10	10	120	10	0				
	CTPR/L 12GX		12	12	85	12	0		LRIS-4*12PW		
	CTPR/L 12		12	12	120	12	0				
	CTPR/L 13		13	13	120	13	0				
	CTPR/L 16H		16	16	100	16	0				
	CTPR/L 16		16	16	120	16	0				

形状	型号	尺寸（mm）							适用刀片	零部件		库存	
		Ds	h	b	L1	h1	f	h2		紧固螺丝	扳手	R	L
	TTP R/L 08	-	8	10	120	8	-	4	TTP217	LRIS-4*10PW(A)	CLR-15S	●	●
	TTP R/L 10		10			10		2				●	●
	TTP R/L 12GX		12	12	85	12		0		LRIS-4*12PW(A)		●	●
	TTP R/L 12				120							●	●
	TTP R/L 16H		16	16	100	16						●	●
	TTP R/L 16				120							●	●
	TTP R/L 20F		20	20	80	20						●	●
	DS-TTP R/L 16F	16.00	15	15	80	-	10	-		LRIS-4*10(B)	LLR-25S-20*65(B)	●	●
	DS-TTP R/L 19	19.05	18	18	120							●	●
	DS TTP R/L 20	20.00	19	19								●	●
	DS-TTP R/L 22	22.00	21	21								●	●
	DS TTP R/L 25	25.40	24	24	150							●	●

TDJ/TDC

形状 图示方向为右手（R）刀	型号	规格尺寸（mm）					库存	
		B	R	L	D	S	YL10	YL930
	TDJ2	2	0.2	20	1.7	3.9	●	●
	TDJ3	3	0.2	20	2.4	4	●	●
	TDJ4	4	0.3	19.76	3	4.05	●	●
	TDJ5	5	0.3	25	4	4.89	●	●
	TDC2	2	0.2	20	1.7	3.84	●	●
	TDC3	3	0.2	20	2.4	4	●	●
	TDC4	4	0.3	20	3	4.03	●	●
	TDC5	5	0.3	25	4	4.89	●	●
	TDT2	2	0.2	20	1.7	3.9	●	●
	TDT3	3	0.2	20	2.40	4	●	●
	TDT4	4	0.3	19.76	3	4.05	●	●
	TDT5	5	0.3	25	4	4.89	●	●

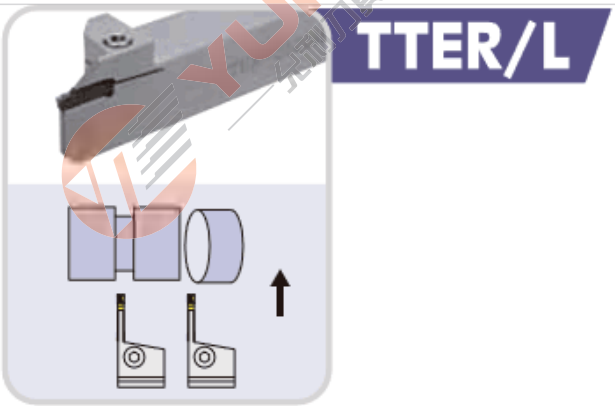

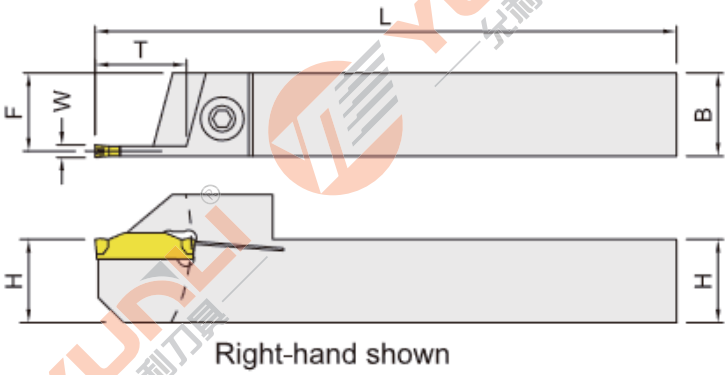

型号	尺寸（mm）									
	H	B	L	F	T	H2	W	适用	螺丝	扳手
TTER/L-2020K-2-20L	20	20	125	20.2	20	-	2	TDC... TSC... TDT... TSJ... TDJ...	HTM525	PL40
TTER/L-2525K-2-20L	25	25	150	25.2	20		2			
TTER/L-2020K-3-20L	20	20	125	20.3	20		3			
TTER/L-2525K-3-20L	25	25	150	25.3	20		3			
TTER/L-1010K-2-10LH	10	10	125	10.2	10	2	2		MS4013F	ETL15
TTER/L-1212K-2-12LH	12	12	125	12.2	12	2				
TTER/L-1616K-2-16LH	16	16	125	16.2	16	-				

PENTA五星霸王刀

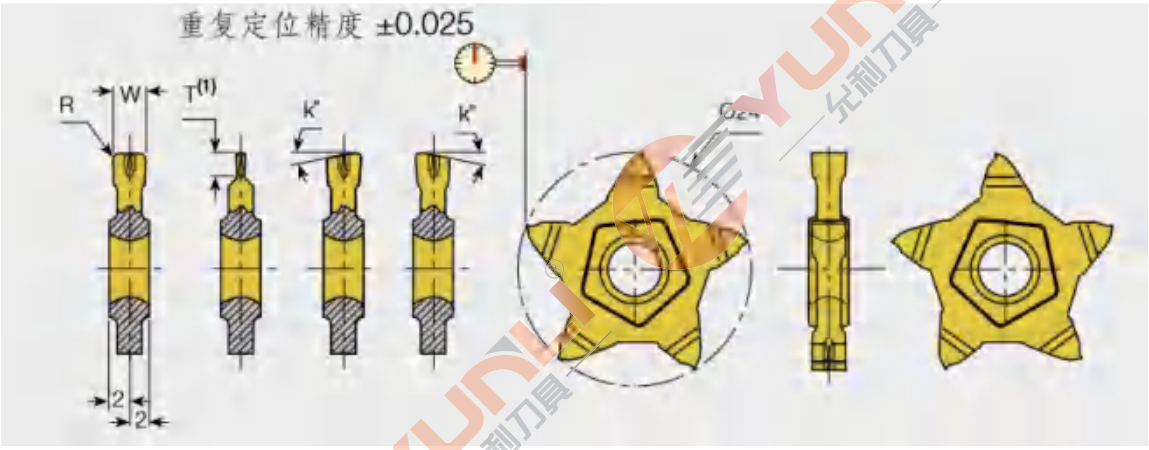

形状	型号	W刃宽(MM)	R角	T	K°	最大切深(MM)	其他说明
 图示方向为右手（R）刀	PENTA 24N050-S	0.50	0.05	2.50	6.0	2.00	平口
	PENTA 24N075 S	0.75	0.05	3.00	6.0	2.00	平口
	PENTA 24N100-S	1.00	0.05	3.50	12.0	2.50	平口
	PENTA 24N125-S	1.25	0.05	4.00	12.0	4.00	平口
	PENTA 24N150-S	1.50	0.05	5.00	12.0	6 00	平口
	PENTA 24N175-S	1.75	0.05	6.00	6.0	6.00	平口
	PENTA 24N200-S	2.00	0.05	6.00	12.0	6.00	平口
	PENTA 24N230-S	2.30	0.15	6.00	6.0	6.00	平口
	PENTA 24N250-S	2.50	0.20	6.00	6.0	6.00	平口
	PENTA 24N300-S	3.00	0.20	6.00	6.0	6.00	平口

形状	型号	W刃宽(MM)	R角	f	D1	最大切深(MM)	其他说明
 图示方向为右手（R）刀	PENTA 24R050-S	0.50	0.05	6.0	7.2	2.00	斜口
	PENTA 24R075-S	0 75	0.05	6.0	7.2	2.00	斜口
	PENTA 24R100-S	1.00	0.05	6.0	7.2	2.50	斜口
	PENTA 24R125-S	1.25	0.05	6.0	11.0	4.00	斜口
	PENTA 24R150-S	1.50	0.05	6.0	11.0	6.00	斜口
	PENTA 24R175-S	1.75	0.05	6.0	11.0	6.00	斜口
	PENTA 24R200-S	2.00	0.05	6.0	12.6	6.00	斜口
	PENTA 24R230-S	2.30	0.05	6.0	12.6	6.00	斜口
	PENTA 24R250-S	2.50	0.05	6.0	12.6	6.00	斜口
	PENTA 24R300-S	3.00	0.05	6.0	12.6	6.00	斜口

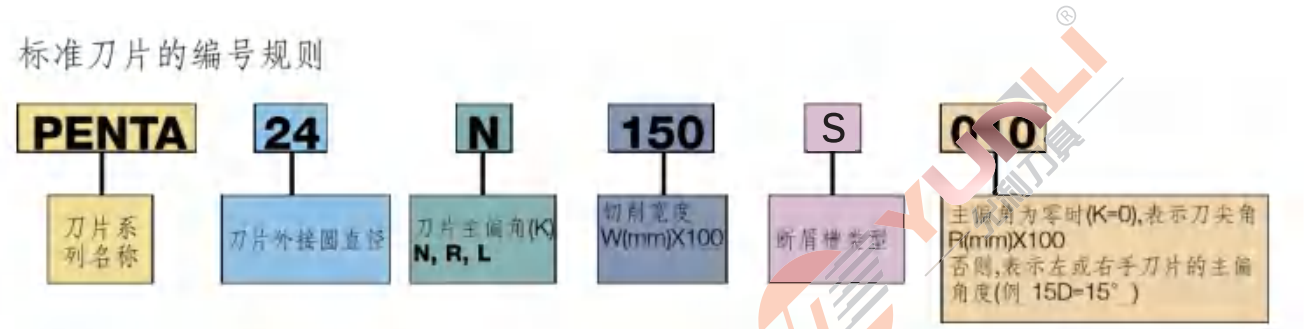

PCHR/L

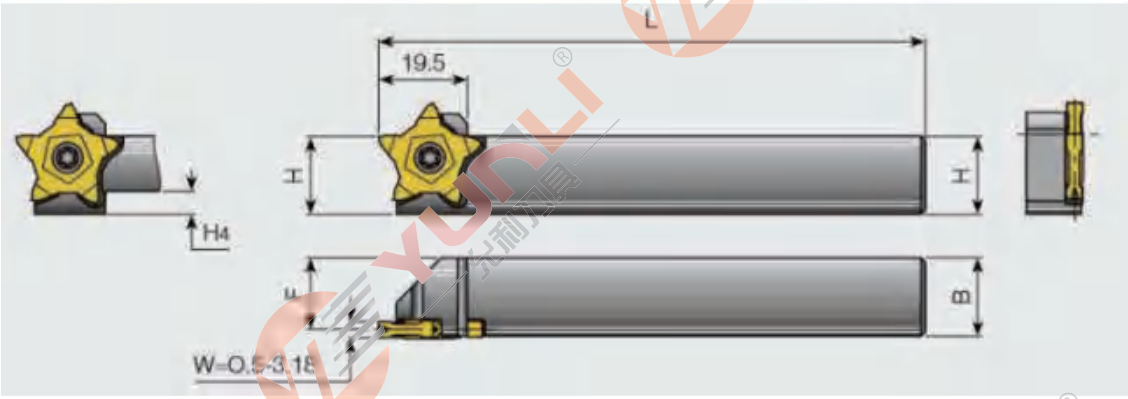

形状	型号	尺寸（mm）				螺钉	扳手	适用刀片
		H×B	F	L	H4			
 图示方向为右手（R）刀	PCHR/L10-24	10×10	8.5	120	6	SR 16-212-01397(1) SR 16-212-01397(2)	T 2010/5	PENTA 24...
	PCHR/L12-24	12×12	10.5	120	4			
	PCHR/L16-24	16×16	14.5	120	—			
	PCHR/L20-24	20×20	18.5	120	—			
	PCHR/L25-24	25×25	23.5	135	—			

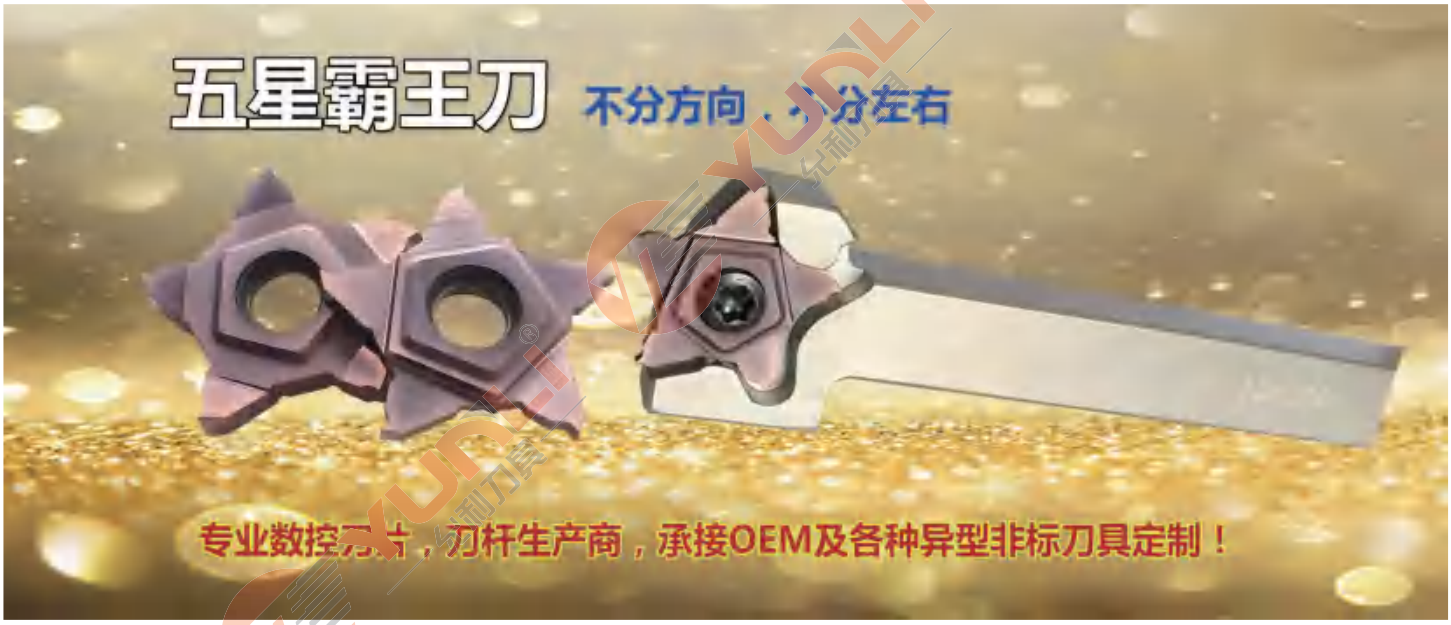

MACR/L 切刀片

形状	型号	尺寸 Dimension(mm)						材质 Grade recommended		
有方向的刀片图示为右手方向（R）	Type	W	r ε	L1	θ	θ 1	ΦD(max)	YL930	YL740	YL10
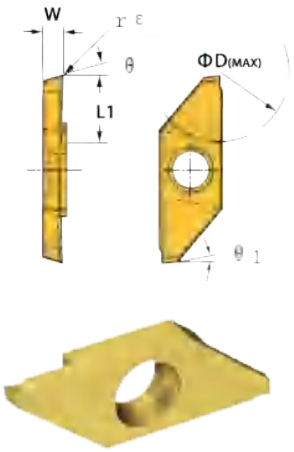	MACR/L3070-R	0.7	0.05	4.3	15.0	6 °	8.00		●	●
	MACR/L3100-R	1.00	0.05	6.3	15.0	6 °	12.00		●	●
	MACR/L3150-R	1.50	0.05	6.3	15.0	6 °	12.00		●	●
	MACR/L3200-R	2.00	0.05	8.5	15.0	6 °	16.00		●	●
	MACR/L3150-R20	1.50	0.05	6.3	15.0	6 °	12.00		●	●
	MACR/L3200-R20	2.00	0.05	8.5	15.0	6 °	16.00		●	●
	MACR/L3070-N	0.70	0.05	4.3		6 °	8.00		●	●
	MACR/L3100-N	1.00	0.05	6.3		6 °	12.00		●	●
	MACR/L3150-N	1.50	0.05	6.3		6 °	12.00		●	●
	MACR/L3200-N	2.00	0.05	8.5		6 °	16.00		●	●
	MACR/L3070-L	0.70	0.05	4.3	15.0	6 °	8.00		●	●
	MACR/L3100-L	1.00	0.05	6.3	15.0	6 °	12.00		●	●
	MACR/L3150-L	1.50	0.05	6.3	15.0	6 °	12.00		●	●
	MACR/L3200-L	2.00	0.05	8.5	15.0	6 °	16.00		●	●
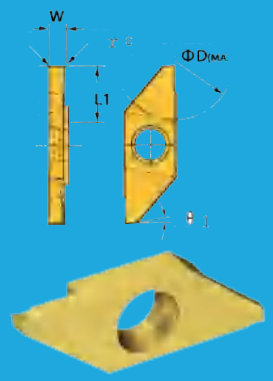	MACR/L3100-T	1.00	0.05	6.3		6 °	12.00		●	●
	MACR/L3150-T	1.50	0.05	6.3		6 °	12.00		●	●
	MACR/L3200-T	2.00	0.05	6.3		6 °	16.00		●	●
	MACR/L3250-T	2.50	0.05	8.5		6 °	16.00		●	●

MACR/L 切刀片

形状	型号	尺寸 Dimension(mm)						材质 Grade recommended		
有方向的刀片图示为右手方向（R）	Type	W	r ε	L1	θ	θ 1	ΦD(max)	YL930	YL740	YL10
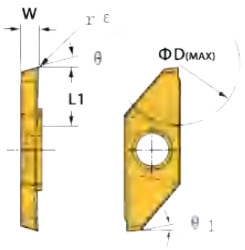	MACR/L3070-R	0.7	0.05	4.3	15 °	6 °			●	●
	MACR/L3100-R	1.0	0.05	6.3	15 °	6 °			●	●
	MACR/L3150-R	1.5	0.05	6.3	15 °	6 °			●	●
	MACR/L3200-R	2.0	0.05	8.5	15 °	6 °			●	●
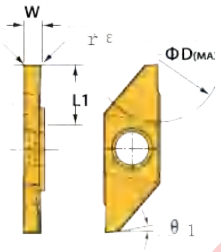	MACR/L3070-N	0.7	0.05	4.3		6 °			●	●
	MACR/L3100-N	1.0	0.05	6.3		6 °			●	●
	MACR/L3150-N	1.5	0.05	6.3		6 °			●	●
	MACR/L3200-N	2.0	0.05	8.5		6 °			●	●
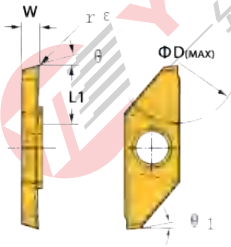	MACR/L3150-R20	1.5	0.05	6.3	20 °	6 °			●	●
	MACR/L3200-R20	2.0	0.05	8.5	20 °	6 °			●	●

MAGR/L 槽刀片

形状	型号	尺寸 Dimension(mm)						材质 Grade recommended		
有方向的刀片图示为右手方向（R）	Type	W	r ε	L1	θ	θ 1	ΦD(max)	YL930	YL740	YL10
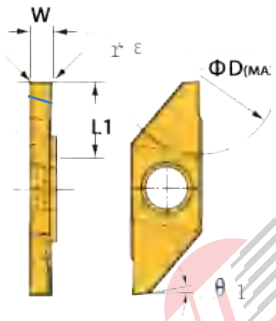	MAGR/L3050	0.5	0.05	1.3		6 °			●	●
	MAGR/L3075	0.75	0.05	2.5		6 °			●	●
	MAGR/L3100	1.00	0.05	2.7		6 °			●	●
	MAGR/L3125	1.25	0.05	2.7		6 °			●	●
	MAGR/L3150	1.50	0.05	3.7		6 °			●	●
	MAGR/L3175	1.75	0.05	3.7		6 °			●	●
	MAGR/L3200		0.05	3.7		6 °			●	●
	MAGR/L3250	2.50	0.05	3.7		6 °			●	●

MATR/L 仿形加工刀片

形状	型号	尺寸 Dimension(mm)						材质 Grade recommended		
有方向的刀片图示为右手方向（R）	Type	W	r ε	L1	θ	θ 1	ΦD(max)	YL930	YL740	YL10
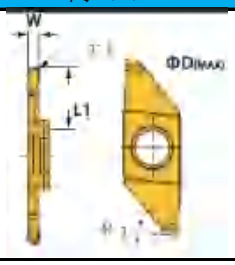	MAPL3080	0.80	0.40	3.8		6 °			●	●
	MAPL3125	1.25	0.63	4.0		6 °			●	●
	MAPL3160	1.60	0.80	4.0		6 °			●	●
	MAPL3250	2.50	1.25	4.0		6 °			●	●

MATR/L 螺纹刀片

形状	型号		螺距（mm）	齿距 TPI		尺寸（mm inch）		材质 Grade recommended		
有方向的刀片图示为右手方向（R）	Type	r1 in	最小	最小	最大	f1 mm	f1 in.	YL930	YL740	YL10
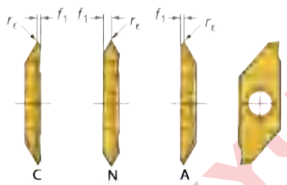	MATR/L3 60-A	.002	0.2	80	24	0.6	.024		●	●
	MATR/L3 60-C	.002	0.2	80	24	0.6	.024		●	●
	MATR/L3 60-N	.002	0.20	80	12	1.59	.063		●	●

订货示例：MACR3070=R YL740 接受非标定制 ● 为标准库存 ○ 为非标准库存

NGP精磨切槽刀片

形状	型号		尺寸			材质		
	R	L	W	R	T	YL930	YL740	YL10
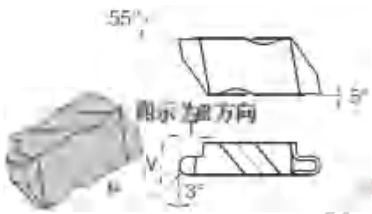	NRP3050R	NRP3050L	1.00	0.5	2.5	●	○	●
	NRP3075R	NRP3075L	1.50	0.8	2.5	●	○	●
	NRP3100R	NRP3100L	2.00	1.0	3.5	●	○	●
	NRP3150R	NRP3150L	3.00	1.5	4.0	●	○	●
	NRP3200R	NRP3200L	4.00	2.0	4.0	●	○	●

订货示例：NRP3050R YL930 接受非标定制 ● 为标准库存 ○ 为非标准库存

NG 平板型切槽刀片

形状	型号		尺寸			材质		
	R	L	W（±0.03）	R	T	YL930	YL740	YL10
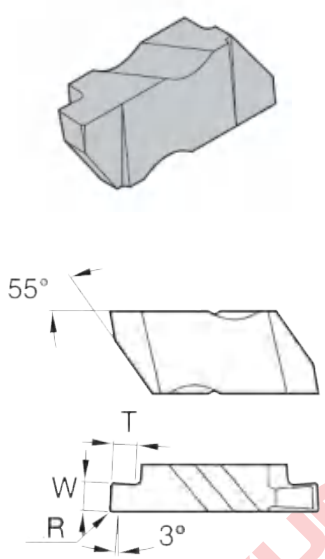	NG2075R	NG2075L	0.75	0.1	1.5	●	○	●
	NG2100R	NG2100L	1.00	0.1	1.5	●	○	●
	NG2120R	NG2120L	1.20	0.1	1.5	●	○	●
	NG2145R	NG2145L	1.45	0.2	1.5	●	○	●
	NG2150R	NG2150L	1.50	0.2	2.5	●	○	●
	NG2200R	NG2200L	2.00	0.2	2.5	●	○	●
	NG2230R	NG2230L	2.30	0.2	2.5	●	○	●
	NG2250R	NG2250L	2.50	0.2	2.5	●	○	●
	NG2300R	NG2300L	3.00	0.2	2.5	●	○	●
	NG3100R	NG3100L	1.00	0.2	2.0	●	○	●
	NG3125R	NG3125L	1.25	0.2	2.5	●	○	●
	NG3150R	NG3150L	1.50	0.2	2.5	●	○	●
	NG3200R	NG3200L	2.00	0.2	2.5	●	○	●
	NG3220R	NG3220L	2.20	0.2	2.5	●	○	●
	NG3235R	NG3235L	2.35	0.2	4.0	●	○	●
	NG3250R	NG3250L	2.50	0.3	4.0	●	○	●
	NG3275R	NG3275L	2.75	0.3	4.0	●	○	●
	NG3280R	NG3280L	2.80	0.3	4.0	●	○	●
	NG3300R	NG3300L	3.00	0.3	4.0	●	○	●
	NG3320R	NG3320L	3.20	0.3	4.0	●	○	●
	NG3350R	NG3350L	3.50	0.3	4.0	●	○	●
	NG3400R	NG3400L	4.00	0.4	4.0	●	○	●
	NG3450R	NG3450L	4.50	0.4	4.0	●	○	●
	NG3470R	NG3470L	4.70	0.4	4.0	●	○	●
	NG3480R	NG3480L	4.80	0.4	4.0	●	○	●

订货示例：NG3300R YL930　接受非标定制　● 为标准库存　○ 为非标准库存

切槽及仿形

形状	型号	尺寸				材质		
		W	Wtol ±	R	T	YL930	YL740	YL10
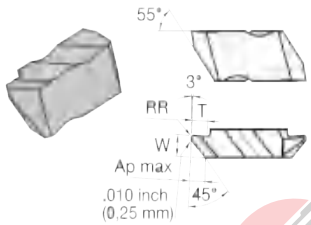	NP2002RK	3.82	0.03	0.25	2.81	●	○	●
	NP2012RK	3.82	0.03	0.25	2.81	●	○	●
	NP3002RK	4.95	0.03	0.25	5.08	●	○	●
	NP3012RK	4.95	0.03	0.25	5.08	●	○	●

NGP精磨切槽刀片

形状	型号		尺寸			材质		
	R	L	W	R	T	YL930	YL740	YL10
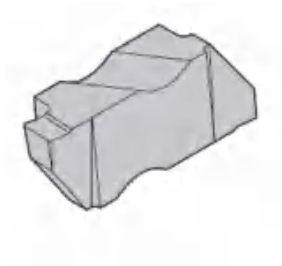 图示为R方向 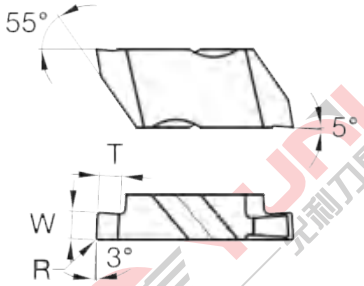	NGP2075R	NGP2075L	0.75	0.1	1.5	●	○	●
	NGP2100R	NGP2100L	1.00	0.1	1.5	●	○	●
	NGP2120R	NGP2120L	1.20	0.1	1.5	●	○	●
	NGP2145R	NGP2145L	1.45	0.2	1.5	●	○	●
	NGP2150R	NGP2150L	1.50	0.2	2.5	●	○	●
	NGP2200R	NGP2200L	2.00	0.2	2.5	●	○	●
	NGP2230R	NGP2230L	2.30	0.2	2.5	●	○	●
	NGP2250R	NGP2250L	2.50	0.2	2.5	●	○	●
	NGP2300R	NGP2300L	3.00	0.2	2.5	●	○	●
	NGP3100R	NGP3100L	1.00	0.2	2.0	●	○	●
	NGP3125R	NGP3125L	1.25	0.2	2.5	●	○	●
	NGP3150R	NGP3150L	1.50	0.2	2.5	●	○	●
	NGP3200R	NGP3200L	2.00	0.2	2.5	●	○	●
	NGP3220R	NGP3220L	2.20	0.2	2.5	●	○	●
	NGP3235R	NGP3235L	2.35	0.2	4.0	●	○	●
	NGP3250R	NGP3250L	2.50	0.3	4.0	●	○	●
	NGP3275R	NGP3275L	2.75	0.3	4.0	●	○	●
	NGP3280R	NGP3280L	2.80	0.3	4.0	●	○	●
	NGP3300R	NGP3300L	3.00	0.3	4.0	●	○	●
	NGP3320R	NGP3320L	3.20	0.3	4.0	●	○	●
	NGP3350R	NGP3350L	3.50	0.3	4.0	●	○	●
	NGP3400R	NGP3400L	4.00	0.4	4.0	●	○	●
	NGP3450R	NGP3450L	4.50	0.4	4.0	●	○	●
	NGP3470R	NGP3470L	4.70	0.4	4.0	●	○	●
	NGP3480R	NGP3480L	4.80	0.4	4.0	●	○	●

订货示例：NGP3300R YL930　接受非标定制　● 为标准库存　○ 为非标准库存

切槽及仿形 (切屑控制)

形状	型号	尺寸				材质		
		W	Wtol ±	R	T	YL930	YL740	YL10
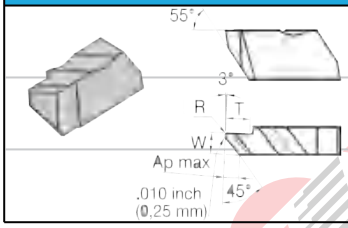	NPD2002RK	3.68	0.13	0.09	5.08	●	○	●
	NPD3002RK	4.83	0.13	0.09	6.35	●	○	●
	NPD3012RK	4.95	0.13	0.25	6.35	●	○	●

切槽及仿形 (切屑控制)

形状	型号				外螺纹螺距	内螺纹螺距	材质		
			R	E	mm	mm	YL930	YL740	YL10
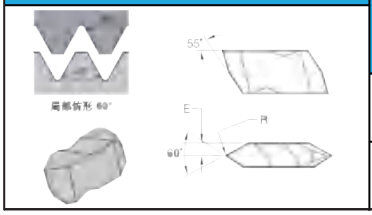	NT2R	NT2L	0.1	1.9	0.7-3.0	1.25-3.5	●	○	●
	NT3R	NT3L	0.17	2.49	1.25-4.0	2.0-5.0	●	○	●

切槽及仿形 (切屑控制)

形状	型号					材质		
			R	E	TPI	YL930	YL740	YL10
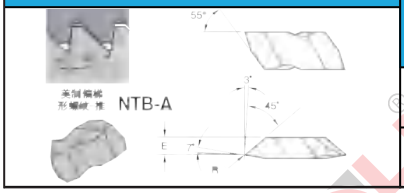	NTB2RA		0.08	3.2	16-20	●	○	●
	NTB3RA	NTB3RA	0.17	4.17	‘ 8-16	●	○	●

阿彼特760系列双孔槽刀

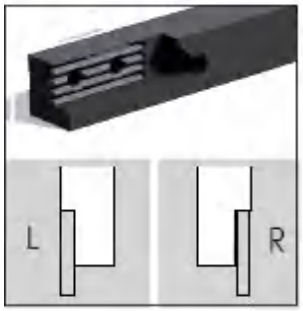

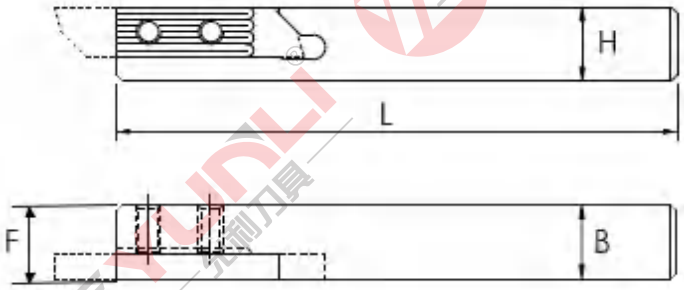

刀杆型号		尺寸				适用刀片	螺丝	扳手
	库存	H	B	L	F			
Y760-10	●	10	10	120	10	CTPS	M4.0	T15
Y760-12	●	12	12	120	12			
Y760-16	●	16	16	120	16			
Y760-20	●	20	20	125	20			
Y760-25	●	25	25	150	25			

阿彼特760系列双孔槽刀

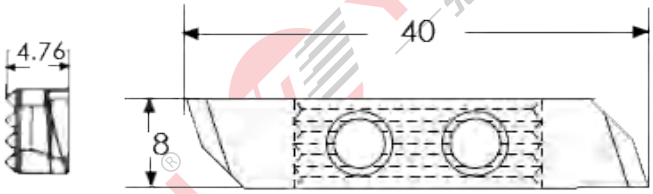

形状	型号	尺寸				材质		
		W	K	R	T	YL930	YL740	YL10
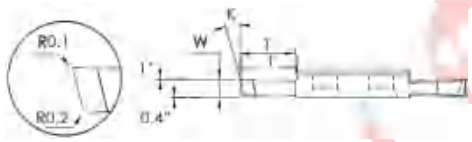	A-C150R-S	1.5	15	0.1	10.0	●	○	●
	A-C200R-S	2.0	15	0.1	10.0	●	○	●
	A-C250R-S	2.5	15	0.15	10.0	●	○	●
	A-C300R-S	3.0	15	0.15	10.0	●	○	●
	A-G150N-S	1.5		0.1	10.0	●	○	●
	A-G200N-S	2.0		0.1	10.0	●	○	●
	A-G250N-S	2.5		0.15	10.0	●	○	●
	A-G300N-S	3.0		0.15	10.0	●	○	●
	A-C150R-N	1.5	15	0.1	10.0	○	○	○
	A-C200R-N	2.0	15	0.1	10.0	○	○	○
	A-C250R-N	2.5	15	0.15	10.0	○	○	○
	A-C300R-M	3.0	15	0.15	10.0	○	○	○
	A-G150N	1.5		0.1	10.0	○	○	○
	A-G200N	2.0		0.1	10.0	○	○	○
	A-G250N	2.5		0.15	10.0	○	○	○
	A-G300N	3.0		0.15	10.0	○	○	○
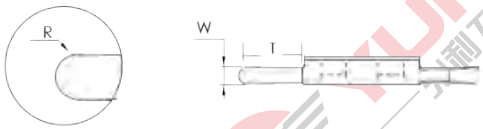	A-G050R-S	1.0		0.5	10.0	○	○	○
	A-G075R-S	1.5		0.75	10.0	○	○	○
	A-G100R-S	2.0		1.0	10.0	○	○	○
	A-G125R-S	2.5		1.25	10.0	○	○	○
	A-G150R-S	3.0		1.5	10.0	○	○	○

订货示例：A-C150R-S YL930　　接受非标定制　　● 为标准库存　○ 为非标准库存

阿彼特760系列双孔槽刀

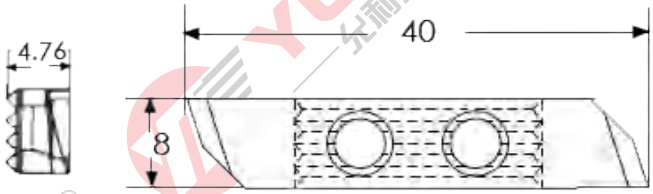

形状	型号	尺寸				材质		
		W	K	R	T	YL930	YL740	YL10
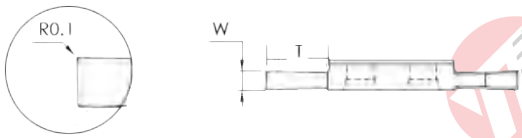	A-F200R-S	2.0		0.1	10.0	●	○	●
	A-F250R-S	2.5		0.20	10.0	●	○	●
	A-F300R-S	3.0		0.20	10.0	●	○	●

形状	型号	尺寸				材质		
		W	K	R	T	YL930	YL740	YL10
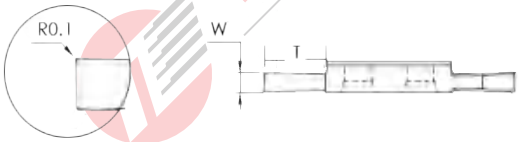	A-F200R-S	2.0		0.1	10.0	●	○	●
	A-F250R-S	2.5		0.20	10.0	●	○	●
	A-F300R-S	3.0		0.20	10.0	●	○	●

形状	型号	尺寸				材质		
		W	K	R	T	YL930	YL740	YL10
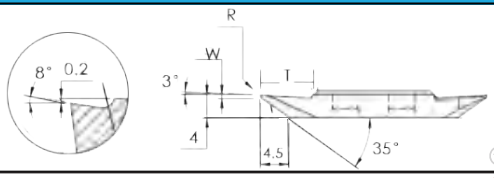	A-BR35005	4.0		0.05	6	○	○	○
	A-BR35010	4.0		0.1	6	○	○	○
	A-BR35015	4.0		0.15	6	○	○	○

形状	型号	尺寸				材质		
		W	K	R	T	YL930	YL740	YL10
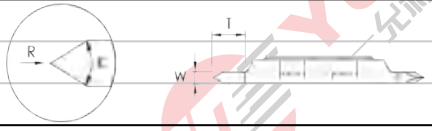	A-TT5501S	3.0	55	0.1	6	●	○	●
	A-TT6001S	3.0	60	0.1	6	●	○	●
	A-TT6002S	3.0	60	0.2	6	●	○	●

订货示例：A-TT6001S YL930　接受非标定制　　● 为标准库存　○ 为非标准库存

DGN/DGR切断切槽刀片

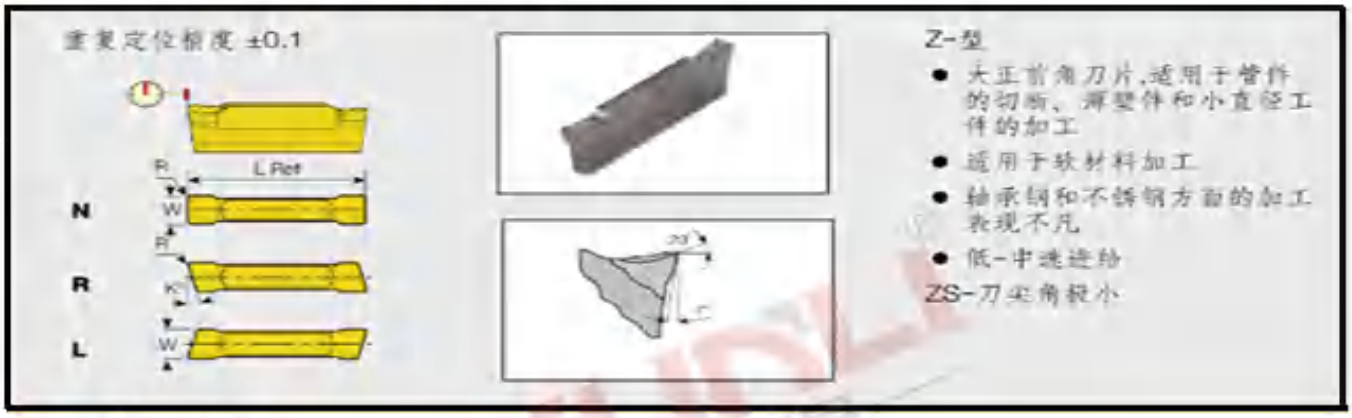

刀片尺寸

形状	型号	R	Tmax	LRef	K°	W	YL10	YL740	YL930
	DGN2002Z	0. 20	18	21. 0	–	2. 00	●	○	●
	DGN2202C	0. 20	19. 8	19. 78	–	2. 20	●	○	●
	DGR3002Z-6D	0. 20	18	21. 0	6	3. 00	●	○	●
	DGR3000ZS-6D	0. 02	18	20. 6	6	3. 00	●	○	●
	DGN3102C	0. 20	20. 1	20. 02	–	3. 10	●	○	●
	DGR3102-15D	0. 20	18. 0	20. 4	15	3. 10	●	○	●
	DGR2202-15D	0. 20	19. 8	19. 78	15	2. 20	●	○	●
	DGL2202-6D	0. 20	18. 0	19. 5	6	2. 20	●	○	●
	DGR3102-6D	0. 20	18. 0	20. 6	6	3. 10	●	○	●
	DGN2002CS	0. 20	19. 7	19. 93	–	2. 00	●	○	●

YUNLI 允利刀具

切槽(切断)加工用刀片

GDM GDG切断切槽刀片

形状			型号	尺寸(mm) CW	公差	RE	INSL	S	材质 YL10	YL740	YL930
切槽	 通用		GDM 2420N-020GM	2.4	±0.03	0.2	20	4.3	●	●	●
			3020N-020GM	3.0							
			3020N-040GM			0.4					
			4020N-020GM	4.0		0.2					
			4020N-040GM			0.4					
			4020N-080GM			0.8					
			5020N-040GM	5.0	±0.04	0.4					
			5020N-080GM			0.8					
			6020N-040GM	6.0		0.4					
			6020N-080GM			0.8					
			8030N-080GM	8.0	±0.05		30	5.5			
	 低进给		GDM 2420N-020GL	2.4	±0.03	0.2	20	4.3	●	●	●
			3020N-020GL	3.0							
			3020N-040GL			0.4					
			4020N-020GL	4.0		0.2					
			4020N-040GL			0.4					
			5020N-040GL	5.0	±0.04						
			6020N-040GL	6.0							
切槽加工	 低用力	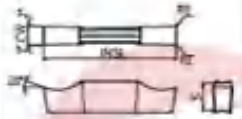	GDG 2520N-020GS	2.5	±0.02	0.2	20	4.3	●	●	●
			3020N-020GS	3.0							
			3520N-020GS	3.5							
			4020N-040GS	4.0		0.4					
			5020N-040GS	5.0							
			6020N-040GS	6.0							
			8030N-040GS	8.0			30	5.5			
圆槽/仿形加工		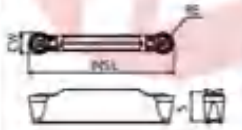	GDM 3020N-150R-CM	3.0	±0.03	1.5	20	4.3	●	●	●
			4020N-200R-CM	4.0		2.0					
			5020N-250R-CM	5.0	±0.04	2.5	*21				
			6020N-300R-CM	6.0		3.0					
切槽·切断加工	 高进给	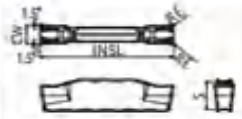	GDM 2020N-020PH	2.0	±0.03	0.2	20	4.3	●	●	●
			3020N-030PH	3.0		0.3					
			4020N-030PH	4.0							
	 高进给 1刀尖螺纹	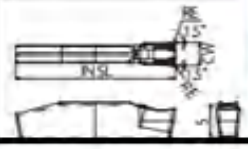	GDMS 2020N-020PH	2.0	±0.03	0.2	20				
			3020N-030PH	3.0		0.3					
			4020N-030PH	4.0							

GDFM切槽（切断）刀片

◆刀片型号的确认方法

GDF	M	S	30	20	N	-	030	DM
系列名	精度符号 M：M级	刀尖数 无符号：2刀尖 S：1刀尖	刃宽 20：2mm 30：3mm ⋮	刀片长度 20：20mm	方向 N：无方向		刀尖R(RE) 020：0.2mm 030：0.3mm 040：0.4mm 150R：1.5mm(圆槽)	断屑槽符号 GM：切槽/横向进给加工 DM：切槽加工 GH：高进给 CM：圆槽

形状			型号	尺寸(mm) CW	公差	RE	INSL	S	YL10	YL740	YL930
切槽/横向进给加工		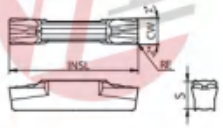	GDFM 2020N-020GM	2.0	±0.03	0.2	21	3.9	●	●	○
			3020N-030GM	3.0		0.3	20	4.3	●	●	○
			4020N-040GM	4.0		0.4		4.5	●	●	○
			5020N-040GM	5.0	±0.04				●	●	○
			5020N-080GM			0.8			●	●	○
			6020N-040GM	6.0		0.4			●	●	○
			6020N-080GM			0.8			●	●	○

YUNLI 允利刀具

切槽 / 切断加工用刀杆

KGD (一体型)

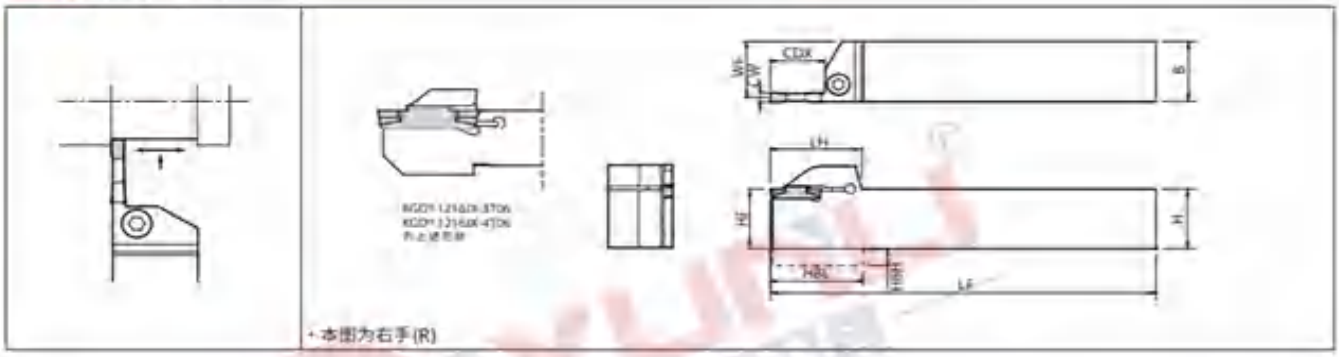

· 本图为右手(R)

槽宽 (mm)	加工可对应的槽深 (mm)	型号		尺寸(mm) H	HF	HBH	B	LF	LH	HBL	WF	CDX	刃宽 CW(mm) MIN.	MAX.	零件 紧固螺钉	扳手
2	6	KGD*L	1616H-2T06	16	16	4.0	16	100	27.7	28.0	15.2	6	2.0	3.0	HH5X16	LW-4
			2020K-2T06	20	20	-	20	125	28.0	-	19.2					
			2525M-2T06	25	25		25	150			24.2				HH5X25	
	10	KGD*L	1616H-2T10	16	16	4.0	16	100	30.2	30.5	15.2	10			HH5X16	
			2020K-2T10	20	20	-	20	125	30.5	-	19.2					
			2525M-2T10	25	25		25	150			24.2				HH5X25	
	17	KGD*L	1616H-2T17	16	16	4.0	16	100	31.2	31.5	15.2	17			HH5X16	
			2012K-2T17	20	20	-	12	125	32.5	-	11.2					
			2020K-2T17				20				19.2					
			2525M-2T17	25	25		25	150			24.2				HH5X25	
2.4	17	KGD*L	2012K-2.4T17	20	20	-	12	125	32.5	-	11.0	17	2.4	3.0	HH5X16	LW-4
			2020K-2.4T17				20				19.0					
3	6	KGD*L	1216JX-3T06	12	12	2.0	16	120	19.5	19	14.8	6	3.0	4.0	SE-50125TR	LTW-20
			1616H-3T06	16	16	4.0		100	27.7	28.0					HH5X16	LW-4
			2020K-3T06	20	20	-	20	125	28.0	-	18.8					
			2525M-3T06	25	25		25	150			23.8				HH5X25	
	10	KGD*L	1616H-3T10	16	16	4.0	16	100	30.2	30.5	14.8	10			HH5X16	
			2020K-3T10	20	20	-	20	125	30.5	-	18.8					
			2525M-3T10	25	25		25	150			23.8				HH5X25	
	20	KGD*L	1616H-3T20	16	16	4.0	16	100	34.2	34.5	14.8	20			HH5X16	
			2012K-3T20	20	20	-	12	125	34.5	-	10.8					
			2020K-3T20				20				18.8					
			2525M-3T20	25	25		25	150	35.5		23.8				HH5X25	
4	6	KGD*L	1216JX-4T06	12	12	2.0	16	120	19.5	19	14.3	6	4.0	5.0	SE-50125TR	LTW-20
	10	KGD*L	2020K-4T10	20	20	-	20	125	30.5	-	18.3	10			HH5X16	LW-4
			2525M-4T10	25	25		25	150			23.3				HH5X25	
	20	KGD*L	2020K-4T20	20	20		20	125	34.5		18.3	20			HH5X16	
			2525M-4T20	25	25		25	150	35.5		23.3				HH5X25	
	25	KGD*L	2525M-4T25	25	25		25	150	40.5		23.3	25				
5	10	KGD*L	2020K-5T10	20	20	-	20	125	30.5	-	17.8	10	5.0	6.0	HH5X16	LW-4
			2525M-5T10	25	25		25	150			22.8				HH5X25	
	17	KGD*L	2020K-5T17	20	20		20	125	37.5		17.8	17				
			2525M-5T17	25	25		25	150			22.8					
	25	KGD*L	2525M-5T25	25	25		25	150	40.5		22.8	25				
6	15	KGD*L	2525M-6T15	25	25	-	25	150	32.5	-	22.4	15	6.0	6.0	HH5X25	LW-4
	30	KGD*L	2525M-6T30	25	25		25	150	45.5		22.4	30				
8	25	KGD*L	2525M-8T25	25	25	7.0	25	150	43.3	44.2	22.0	25	8.0	8.0	HH6X25	LW-5
			3232P-8T25	32	32	-	32	170		-	29.0					

YUNLI 允利刀具

KGDR/L切断切槽刀杆

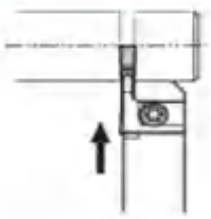

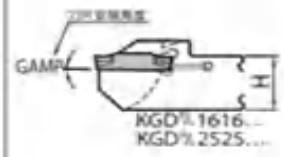

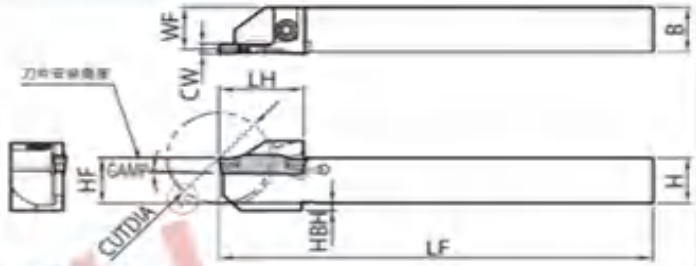

• 本图为右手(R)

型号		加工径	尺寸(mm)							角度	刃宽 CW(mm)		零件	
													紧固螺钉	扳手
		CUTDIA	H	HF	HBH	B	LF	LH	WF	GAMP	MIN.	MAX.		
KGD%	1010JX-2	20	10	10	2	10	120	18	9.2	1°	2.0	3.0	SB-40120TR	LTW-15S
	1212F-2	24	12	12		12	85	19.5	11.2					
	1212JX-2						120							
	1616JX-2	32	16	16	-	16		24.5	15.2					
	2012K-2D34	34	20	20		12	125	32.5	11.2	0°			HH5X16	LW-4
	2020K-2D34					20			19.2					
	2525K-2D34		25	25		25			24.2					
KGD%	1010JX-2.4	20	10	10	2	10	120	18	9	1°	2.4	3.0	SB-40120TR	LTW-15S
	1212F-2.4	24	12	12		12	85	19.5	11					
	1212JX-2.4						120							
	1616JX-2.4	32	16	16	-	16		24.5	15					
	2012K-2.4D34	34	20	20		12	125	32.5	11	0°			HH5X16	LW-4
	2020K-2.4D34					20			19					
	2525K-2.4D34		25	25		25			24					
KGD%	1212JX-3	24	12	12	2	12	120	19.5	10.8	1°	3.0	3.0	SB-40120TR	LTW-15S
	1616JX-3	32	16	16	-	16		24.5	14.8			4.0		
	1616JX-3D38	38						29					SE-50125TR	LTW-20
	1913K-3D38		19	19		13	125		11.8					
	2012JX-3D42	42	20	20		12	120	31	10.8					
	2012JX-3D51	51						36						
	2020JX-3D42	42				20		31	18.8					
	2020JX-3D51	51						36						
	2525K-3D51		25	25		25	125	41.5	23.8	0°			HH5X16	LW-4

KGDS(对应副主轴切断用)

右手(R)

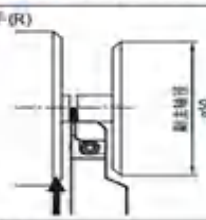

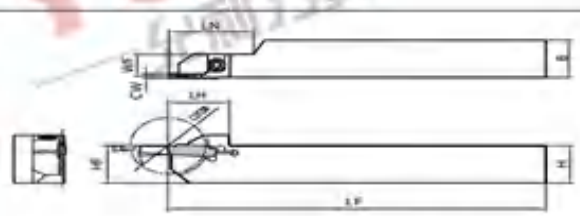

•本图为右手(R)

左手(L)

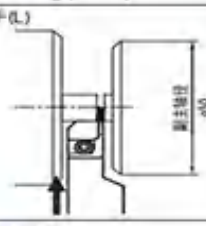

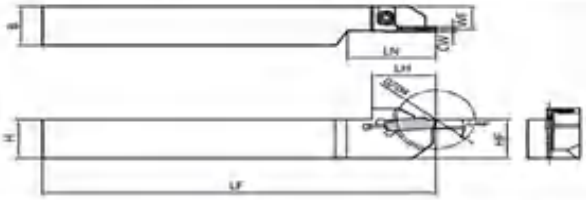

•本图为左手(L)

刀杆尺寸

型号		加工径	尺寸(mm)							角度	刃宽 CW(mm)		零件	
													紧固螺钉	扳手
		CUTDIA	H	HF	B	LF	LH	LN	WF	GAMP	MIN.	MAX.		
KGDS%	1616JX-1.3B	24	16	16	16	120	19.5	27	9.5	5°	1.3	1.3	SB-40120TR	LTW-15S
	1616JX-1.5B								9.4		1.5	1.5		
	1616JX-2B								9.2	1°	2.0	3.0		

KGDF-Z

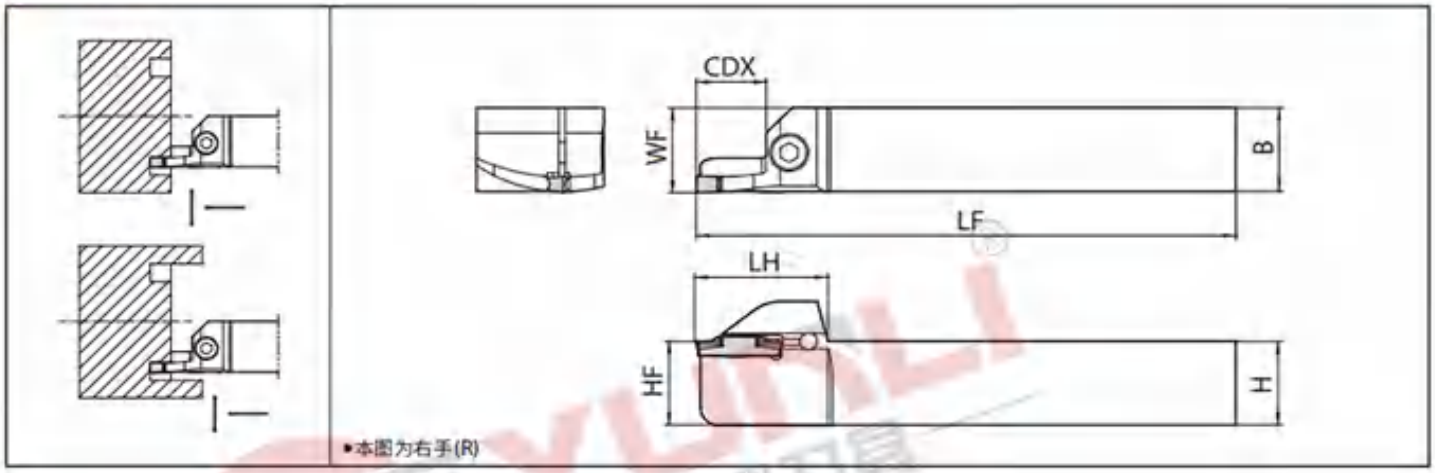

刀杆尺寸

刃宽 CW (mm)	刀杆尺寸 (mm)	加工可对应的槽深 (mm)	端面槽外径 (mm) DAXN [MIN.]	端面槽外径 (mm) DAXX [MAX.]	型号	尺寸(mm) H	HF	B	LF	LH	WF	CDX
3	□20	15	50	65	KGDF 2020K50-3B-Z	20	20	20	125	30.5	20.3	15
			65	85	2020K65-3B-Z							
			85	110	2020K85-3B-Z							
			110	145	2020K110-3B-Z							
	□25		50	65	KGDF 2525M50-3B-Z	25	25	25	150		25.3	
			65	85	2525M65-3B-Z							
			85	110	2525M85-3B-Z							
			110	145	2525M110-3B-Z							
4	□20	15	50	70	KGDF 2020K50-4B-Z	20	20	20	125	30.5	20.3	15
			70	100	2020K70-4B-Z							
			100	150	2020K100-4B-Z							
	□25		50	70	KGDF 2525M50-4B-Z	25	25	25	150		25.3	
			70	100	2525M70-4B-Z							
			100	150	2525M100-4B-Z							
5	□20	15	50	75	KGDF 2020K50-5B-Z	20	20	20	125	30.5	20.3	15
			75	115	2020K75-5B-Z							
			115	180	2020K115-5B-Z							
	□25		50	75	KGDF 2525M50-5B-Z	25	25	25	150		25.3	
			75	115	2525M75-5B-Z							
			115	180	2525M115-5B-Z							

YUNLI 允利刀具

多功能・端面切槽加工刀杆

KFMS

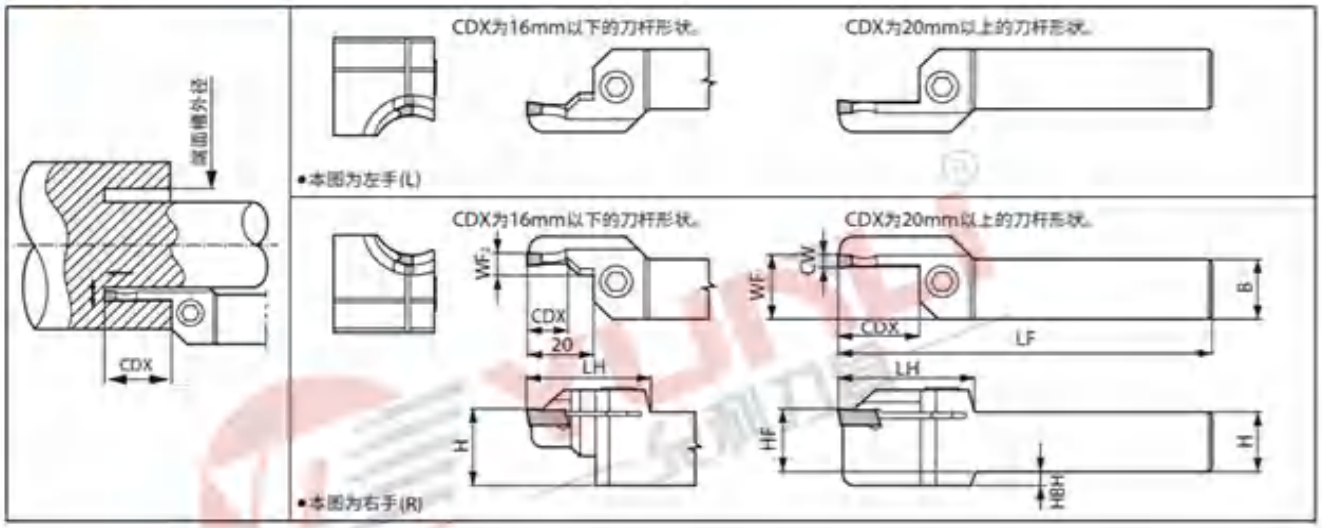

型号		尺寸(mm) H	HF	HBH	B	LF	LH	WF	WF2	CDX	刃宽(mm) CW	端面槽外径 DAXN[MIN.]	DAXX[MAX.]	零件 紧固螺栓	扳手
KFMS®/L	2020K2530-3	20	20	-	20	125	39	20.7	6.1	13	3	25	30	HH5X20	LW-4
	2020K3040-3											30	40		
	2020K4050-3											40	50		
	2020K5065-3						41		-	22		50	65		
	2020K6585-3											65	85		
	2020K85110-3			5			44			25		85	110		
	2020K110145-3											110	145		
	2525M2530-3	25	25	-	25	150	39	25.7	6.1	13		25	30	HH5X25	LW-4
	2525M3040-3											30	40		
	2525M4050-3											40	50		
	2525M5065-3						41		-	22		50	65		
	2525M6585-3											65	85		
	2525M85110-3						44			25		85	110		
	2525M110145-3											110	145		
KFMS®/L	2020K2535-4	20	20	-	20	125	39	20.7	7.1	12	4	25	35	HH5X20	LW-4
	2020K3550-4								-	20		35	50		
	2020K5070-4			5			44			25		50	70		
	2020K70100-4											70	100		
	2020K100150-4											100	150		
	2020K150220-4											150	220		
	2020K220800-4											220	∞		
	2525M2535-4	25	25	-	25	150	39	25.7	7.1	12		25	35	HH5X25	LW-4
	2525M3550-4								-	20		35	50		
	2525M5070-4						44			25		50	70		
	2525M70100-4											70	100		
	2525M100150-4											100	150		
	2525M150220-4											150	220		
	2525M220800-4											220	∞		

刀杆尺寸

型号	尺寸(mm) H	HF	HBH	B	LF	LH	WF	WF2	CDX	刃宽(mm) CW	端面槽外径 DAXN [MIN.]	DAXX [MAX.]	零件 紧固螺栓	扳手		
KFMS®L 2020K2535-5	20	20	-	20	125	39	20.7 (21.2)	-	20	5 (6)	25	35	HH5X20	LW-4		
2020K3550-5											35	50				
2020K5075-5						44			25		50	75				
2020K75115-5			5								75	115				
2020K115180-5											115	180				
2020K180235-5											180	235				
2020K235800-5											235	∞				
2525M2535-5	25	25	-	25	150	39	25.7 (26.2)	-	20		25	35	HH5X25	LW-4		
2525M3550-5											35	50				
2525M5075-5						44			25		50	75				
2525M75115-5						51			32		75	115				
2525M115180-5											115	180				
2525M180235-5											180	235				
2525M235800-5											235	∞				

适用刀片

FMM切槽刀片

形状		型号		尺寸(mm) CW	RE	材质 YL10	YL740	YL930
 端面切槽加工用 重视切屑处理型・M级	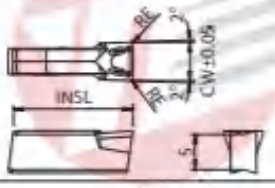	FMM	30-03	3.0	0.3	●	○	●
			40-04	4.0	0.4	●	○	●
			50-04	5.0		●	○	●
			60-04	6.0		●	○	●
 端面切槽加工用 重视锋利度型・M级	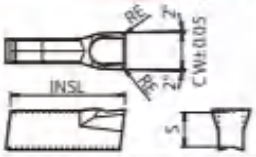	FMN	3	3.0	0.25	●	○	●
			4	4.0		●	○	●
			5	5.0		●	○	●
			6	6.0		●	○	●

NGP NGD切断刀片

	样本代码	刀座尺寸	尺寸 槽宽 W inch	槽宽 W mm	槽深 T inch	槽深 T mm	材质 YL10	YL740	YL930
NGP 	右手								
	NGP2031R	2	.031	0,79	.050	1,27	●	○	●
	NGP2062R	2	.062	1,58	.110	2,79	●	○	●
	NGP3088R	3	.088	2,24	.094	2,39	●	○	●
	NGP3125R	3	.125	3,18	.150	3,81	●	○	●
	NGP3189R	3	.189	4,80	.150	3,81	●	○	●
	NGP4189R	4	.189	4,80	.250	6,35	●	○	●
	NGP4250R	4	.250	6,35	.250	6,35	●	○	●
	左手								
	NGP3125L	3	.125	3,18	.150	3,81	●	○	●
	NGP3156L	3	.156	3,96	.150	3,81	●	○	●
	NGP3189L	3	.189	4,80	.150	3,81	●	○	●
NGD-K 	右手								
	NGD3062RK	3	.062	1,58	.125	3,18	●	○	●
	NGD3094RK	3	.094	2,39	.250	6,35	●	○	●
	NGD3125RK	3	.125	3,18	.250	6,35	●	○	●
	NGD3189RK	3	.189	4,80	.250	6,35	●	○	●
	NGD4125RK	4	.125	3,18	.250	6,35	●	○	●
	NGD4189RK	4	.189	4,80	.375	9,53	●	○	●
	NGD4250RK	4	.250	6,35	.500	12,70	●	○	●
	左手								
	NGD3062LK	3	.062	1,58	.125	3,18	●	○	●
	NGD3094LK	3	.094	2,39	.250	6,35	●	○	●
	NGD3125LK	3	.125	3,18	.250	6,35	●	○	●
	NGD3189LK	3	.189	4,80	.250	6,35	●	○	●
	NGD4125LK	4	.125	3,18	.250	6,35	●	○	●
	NGD4189LK	4	.189	4,80	.375	9,53	●	○	●
	NGD4250LK	4	.250	6,35	.500	12,70	●	○	●

NER切断刀杆

NE

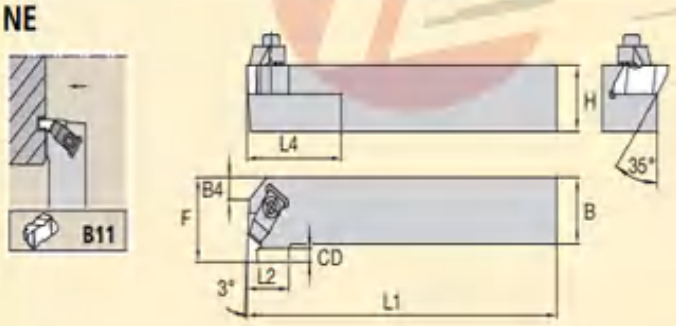

NR

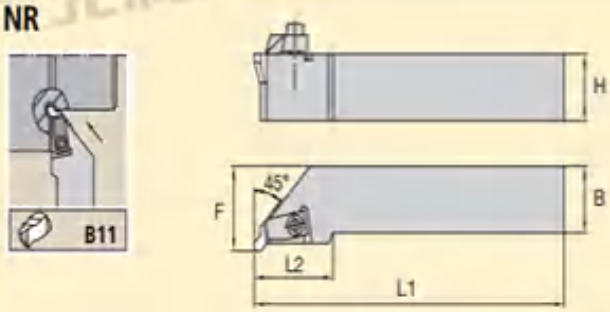

刀片规格	样本代码	H	B	F	L1	L2	B4	CD	B3	L4	压板	压板螺钉	扳手规格
	右手												
N.2L	NER1616H2	16	16	20	100	15	-	3,5	-	25,4	CM75	MS1200	T10
N.2L	NER2020K2	20	20	25	125	15	-	3,5	-	25,4	CM75	MS1200	T10
N.2L	NER2525M2	25	25	32	150	15	-	3,5	-	25,4	CM75	MS1200	T10
N.3L	NER2525M3	25	25	32	150	22	-	5,3	-	50,8	CM73LP	MS2111	25 IP
N.3L	NER3225P3	32	25	32	170	22	-	5,3	-	50,8	CM73LP	MS2111	25 IP
N.4L	NER2525M4	25	25	35	150	24	-	7,5	-	50,8	CM73LP	MS2111	25 IP
N.4L	NER3225P4	32	25	35	170	24	-	7,5	-	50,8	CM73LP	MS2111	25 IP
N.4L	NER3232P4	32	32	40	170	24	-	7,5	-	50,8	CM73LP	MS2111	25 IP
N.5L	NER3232P5	32	32	50	170	35	-	10,5	-	50,8	CM81	MS352	6
	左手												
N.2R	NEL1616H2	16	16	20	100	15	-	3,5	-	25,4	CM74	MS1200	T10
N.2R	NEL2020K2	20	20	25	125	15	-	3,5	-	25,4	CM74	MS1200	T10
N.2R	NEL2525M2	25	25	32	150	15	-	3,5	-	25,4	CM74	MS1200	T10
N.3R	NEL2525M3	25	25	32	150	22	-	5,3	-	50,8	CM72LP	MS2111	25 IP
N.3R	NEL3225P3	32	25	32	170	22	-	5,3	-	50,8	CM72LP	MS2111	25 IP
N.4R	NEL2525M4	25	25	35	150	24	-	7,5	-	50,8	CM72LP	MS2111	25 IP
N.4R	NEL3225P4	32	25	35	170	24	-	7,5	-	50,8	CM72LP	MS2111	25 IP
N.4R	NEL3232P4	32	32	40	170	24	-	7,5	-	50,8	CM72LP	MS2111	25 IP
N.5R	NEL3232P5	32	32	50	170	35	-	10,5	-	50,8	CM80	MS352	6

NSR切槽刀杆

NS

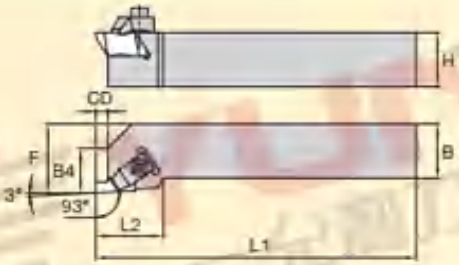

刀片规格	样本代码	H	B	F	L1	L2	B4	CD	B3	L3	压板	压板螺钉	扳手规格
	右手												
N.2R	NSR1010E2	10	10	14	70	19	9	3,5	-	-	CM74	MS1200	T10
N.2R	NSR1212F2	12	12	16	80	19	9	3,5	-	-	CM74	MS1200	T10
N.2R	NSR1616H2	16	16	20	100	19	9	3,5	-	-	CM74	MS1200	T10
N.2R	NSR2020K2	20	20	25	125	19	9	3,5	-	-	CM74	MS1200	T10
N.2R	NSR2525M2	25	25	32	150	19	9	3,5	-	-	CM74	MS1200	T10
N.3R	NSR2020K3	20	20	25	125	32	13	5,3	-	-	CM72LP	MS2111	25 IP
N.3R	NSR2525M3	25	25	32	150	32	13	5,3	-	-	CM72LP	MS2111	25 IP
N.3R	NSR3225P3	32	25	32	170	32	13	5,3	-	-	CM72LP	MS2111	25 IP
N.3R	NSR3232P3	32	32	40	170	32	13	5,3	-	-	CM72LP	MS2111	25 IP
N.4R	NSR2525M4	25	25	32	150	35	14	7,5	-	-	CM72LP	MS2111	25 IP
N.4R	NSR3225P4	32	25	32	170	35	14	7,5	-	-	CM72LP	MS2111	25 IP
N.4R	NSR3232P4	32	32	40	170	35	14	7,5	-	-	CM72LP	MS2111	25 IP
N.5R	NSR3232P5	32	32	40	170	51	16	10,5	-	-	CM80	MS352	6

NSL切断切槽刀杆

刀片规格	样本代码	H	B	F	L1	L2	B4	CD	B3	L3	压板	压板螺钉	扳手规格
	左手												
N.2L	NSL1010E2	10	10	14	70	19	9	3,5	-	-	CM75	MS1200	T10
N.2L	NSL1212F2	12	12	16	80	19	9	3,5	-	-	CM75	MS1200	T10
N.2L	NSL1616H2	16	16	20	100	19	9	3,5	-	-	CM75	MS1200	T10
N.2L	NSL2020K2	20	20	25	125	19	9	3,5	-	-	CM75	MS1200	T10
N.2L	NSL2525M2	25	25	32	150	19	9	3,5	-	-	CM75	MS1200	T10
N.3L	NSL2020K3	20	20	32	125	32	13	5,3	-	-	CM73LP	MS2111	25 IP
N.3L	NSL2525M3	25	25	32	150	32	13	5,3	-	-	CM73LP	MS2111	25 IP
N.3L	NSL3225P3	32	25	32	170	32	13	5,3	-	-	CM73LP	MS2111	25 IP
N.3L	NSL3232P3	32	32	40	170	32	13	5,3	-	-	CM73LP	MS2111	25 IP
N.4L	NSL2525M4	25	25	32	150	35	14	7,5	-	-	CM73LP	MS2111	25 IP
N.4L	NSL3225P4	32	25	32	170	35	14	7,5	-	-	CM73LP	MS2111	25 IP
N.4L	NSL3232P4	32	32	40	170	35	14	7,5	-	-	CM73LP	MS2111	25 IP
N.5L	NSL3232P5	32	32	40	170	51	16	10,5	-	-	CM81	MS352	6

TKN切槽刀片

形状	型号		尺寸 (mm) CW	尺寸 (mm) RE	角度 PSIR°/L	材质 YL10	材质 YL740	材质 YL930
有方向的刀片图示为右手(R)								
 	TKN	1.6	1.6	0.15	-	●	●	●
		2	2.2	0.20		●	●	●
		2.4	2.4	0.20		●	●	●
		3	3.1	0.25		●	●	●
		4	4.1	0.30		●	●	●
		4.8	4.8	0.30		●	●	●
		5	5.1	0.30		●	●	●
		6	6.4	0.35		●	●	●
		8	8.0	0.40		●	●	●
		9	9.6	0.45		●	●	●

N151.2-4E切断刀片

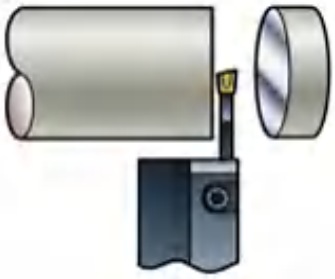

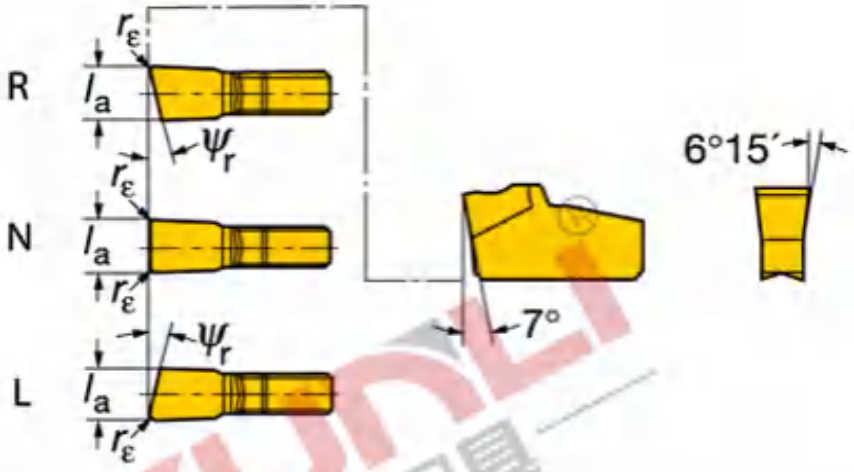


151.2-4E

选择标准，毫米，英寸（mm，in.）									
l_a mm	l_a in.	ψ_r	r_ε mm	r_ε in.	刀座型号	型号	YL10	YL740	YL930
2.50	.098	0°	0.30	.012	25	N151.2-250-4E	●	●	○
3.00	.118	0°	0.30	.012	30	N151.2-300-4E	●	●	○
3.00	.118	5°	0.30	.012		R151.2-300 05-4E	●	●	○
3.00	.118	5°	0.30	.012		L151.2-300 05-4E	●	●	○
4.00	.157	0°	0.30	.012	40	N151.2-400-4E	●	●	○
4.00	.157	5°	0.30	.012		R151.2-400 05-4E	●	●	○
4.00	.157	5°	0.30	.012		L151.2-400 05-4E	●	●	○
5.00	.197	0°	0.40	.016	50	N151.2-500-4E	●	●	○
5.00	.197	5°	0.30	.012		R151.2-500 05-4E	●	●	○
5.00	.197	5°	0.30	.012		L151.2-500 05-4E	●	●	○
6.00	.236	0°	0.40	.016	60	N151.2-600-4E	●	●	○
6.00	.236	5°	0.30	.012		R151.2-600 05-4E	●	●	○
6.00	.236	5°	0.30	.012		L151.2-600 05-4E	●	●	○

N123系列切断刀片

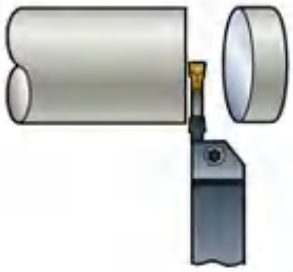

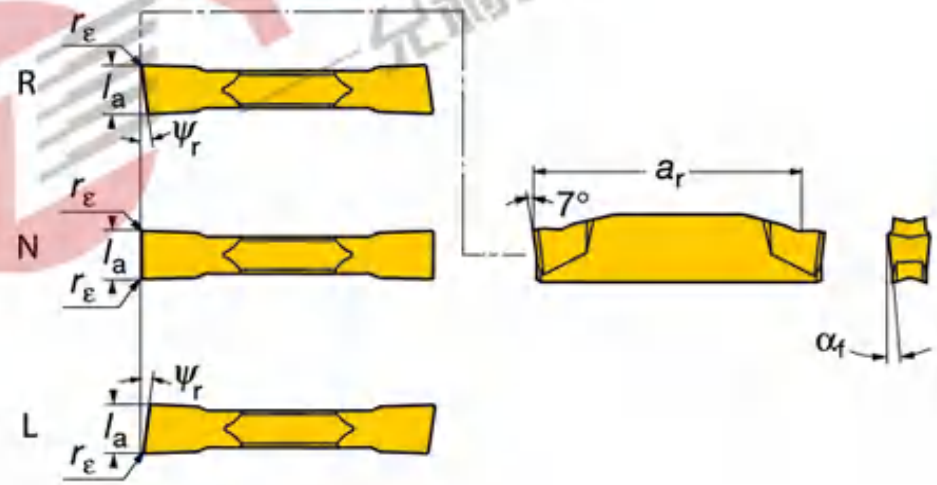

	选择标准，毫米，英寸（mm、in.）										材质		
	l_1 mm	l_1 in.	φ_1	α_1	r_1 mm	r_1 in.	a_p max mm	a_p max in.	刀座型号	型号	YL10	YL740	YL930
 123-CF										CoroCut® 双刃			
	2.5	.098	5°	5°	0.15	.006	18.4	.724	F	L123F2-0250-0501-CF	●	○	●
	2.5	.098	0°	6°	0.10	.004	18.4	.724		N123F2-0250-0001-CF	●	○	●
	2.5	.098	5°	5°	0.15	.006	18.4	.724		R123F2-0250-0501-CF	●	○	●
	3.0	.118	0°	7°	0.10	.004	18.4	.724	G	N123G2-0300-0001-CF	●	○	●
	3.0	.118	5°	7°	0.15	.006	18.3	.720		R/L123G2-0300-0501-CF	●	○	●
	4.0	.157	5°	7°	0.15	.006	25.3	.996	H	L123H2-0400-0501-CF	●	○	●
	4.0	.157	0°	7°	0.15	.006	23.3	.917		N123H2-0400-0001-CF	●	○	●
	4.0	.157	5°	7°	0.15	.006	25.3	.996		R123H2-0400-0501-CF	●	○	●
 123-CM										CoroCut® 单刃			
	2.0	.079	0°	5°	0.20	.008			E	N123E1-0200-0002-CM	●	○	●
	2.5	.098	0°	5°	0.20	.008			F	N123F1-0250-0002-CM	●	○	●
	3.0	.118	0°	7°	0.20	.008			G	N123G1-0300-0002-CM	●	○	●
	4.0	.157	0°	6°	0.20	.008			H	N123H1-0400-0002-CM	●	○	●
	5.0	.197	0°	6°	0.20	.008			J	N123J1-0500-0002-CM	●	○	●
 123-CM										CoroCut® 单刃			
	2.0	.079	0°	5°	0.20	.008			E	N123E1-0200-0002-CM	●	○	●
	2.5	.098	0°	5°	0.20	.008			F	N123F1-0250-0002-CM	●	○	●
	3.0	.118	0°	7°	0.20	.008			G	N123G1-0300-0002-CM	●	○	●
	4.0	.157	0°	6°	0.20	.008			H	N123H1-0400-0002-CM	●	○	●
	5.0	.197	0°	6°	0.20	.008			J	N123J1-0500-0002-CM	●	○	●
 123-CM										CoroCut® 双刃			
	1.5	.059	0°	5°	0.20	.008	12.9	.508	D	N123D2-0150-0002-CM	●	○	●
	2.0	.079	0°	5°	0.20	.008	19	.748	E	N123E2-0200-0002-CM	●	○	●
	2.0	.079	5°	5°	0.20	.008	19	.748		R/L123E2-0200-0502-CM	●	○	●
	2.5	.098	0°	5°	0.20	.008	18.9	.744	F	N123F2-0250-0002-CM	●	○	●
	2.5	.098	5°	5°	0.20	.008	18.9	.744		R/L123F2-0250-0502-CM	●	○	●
	3.0	.118	0°	7°	0.20	.008	18.9	.744	G	N123G2-0300-0002-CM	●	○	●
	3.0	.118	5°	7°	0.20	.008	18.8	.740		R/L123G2-0300-0502-CM	●	○	●
	4.0	.157	0°	6°	0.20	.008	24.1	.949	H	N123H2-0400-0002-CM	●	○	●
	4.0	.157	5°	6°	0.20	.008	24.1	.949		R/L123H2-0400-0502-CM	●	○	●
	5.0	.197	5°	6°	0.20	.008	24.1	.949	J	L123J2-0500-0502-CM	●	○	●
	5.0	.197	0°	6°	0.20	.008	24.1	.949		N123J2-0500-0002-CM	●	○	●
	5.0	.197	5°	6°	0.20	.008	24.1	.949		R123J2-0500-0502-CM	●	○	●
 123-CR										CoroCut® 单刃			
	2.5	.098	0°	5°	0.30	.012			F	N123F1-0250-0003-CR	●	○	●
	3.0	.118	0°	6°	0.30	.012			G	N123G1-0300-0003-CR	●	○	●
	4.0	.157	0°	7°	0.30	.012			H	N123H1-0400-0003-CR	●	○	●
	5.0	.197	0°	7°	0.40	.016			J	N123J1-0500-0004-CR	●	○	●
 123-CR										CoroCut® 双刃			
	2.5	.098	5°	5°	0.30	.012	18.9	.744	F	L123F2-0250-0503-CR	●	○	●
	2.5	.098	0°	6°	0.30	.012	18.9	.744		N123F2-0250-0003-CR	●	○	●
	2.5	.098	5°	5°	0.30	.012	18.9	.744		R123F2-0250-0503-CR	●	○	●
	3.0	.118	0°	6°	0.30	.012	18.9	.744	G	N123G2-0300-0003-CR	●	○	●
	3.0	.118	5°	5°	0.30	.012	18.8	.740		R/L123G2-0300-0503-CR	●	○	●
	4.0	.157	0°	7°	0.30	.012	23.7	.933	H	N123H2-0400-0003-CR	●	○	●
	4.0	.157	5°	6°	0.30	.012	23.7	.933		R/L123H2-0400-0503-CR	●	○	●
	5.0	.197	5°	6°	0.40	.016	23.6	.929	J	L123J2-0500-0504-CR	●	○	●
	5.0	.197	0°	6°	0.40	.016	23.7	.933		N123J2-0500-0004-CR	●	○	●
	5.0	.197	5°	6°	0.40	.016	23.6	.929		R123J2-0500-0504-CR	●	○	●
	6.0	.236	0°	6°	0.40	.016	23.7	.927	K	N123K2-0600-0004-CR	●	○	●

YUNLI 允利刀具

N123系列切断切槽刀片

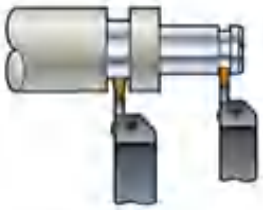

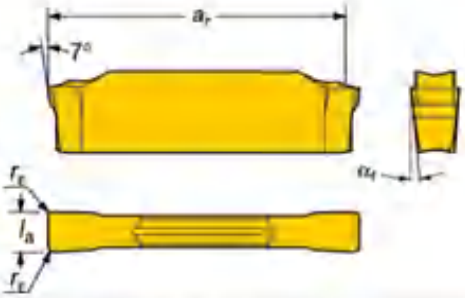

123-GF

	选择标准，毫米，英寸（mm，in.）						型号	材质		
	l_2 mm	l_2 in.	r_ε mm	r_ε in.	α_1	a_p max mm	a_p max in.	刀座型号		YL10	YL740	YL930
									CoroCut® 双刃			
	1.50	.059	0.10	.004	2.5	13.3	.524	D	N123D2-0150-0001-GF	●	○	●
	1.98	.078	0.20	.008	3°	19.2	.756	E	N123E2-0198-0002-GF	●	○	●
	2.00	.079	0.20	.008	3°	19.2	.756		N123E2-0200-0002-GF	●	○	●
	2.00	.079	0.40	.016	3°	19.2	.756		N123E2-0200-0004-GF	●	○	●
	2.24	.088	0.20	.008	3°	19.2	.756		N123E2-0224-0002-GF	●	○	●
	2.39	.094	0.20	.008	3°	19.2	.756	F	N123F2-0239-0002-GF	●	○	●
	2.39	.094	0.40	.016	3°	19.2	.756		N123F2-0239-0004-GF	●	○	●
	2.46	.097	0.30	.012	3°	19.1	.752		N123F2-0246-0003-GF	●	○	●
	2.67	.105	0.20	.008	3°	19.2	.756		N123F2-0267-0002-GF	●	○	●
	2.79	.110	0.30	.012	3°	19.1	.752		N123F2-0279-0003-GF	●	○	●
	3.00	.118	0.20	.008	3°	19.2	.756	G	N123G2-0300-0002-GF	●	○	●
	3.00	.118	0.40	.016	3°	19.2	.756		N123G2-0300-0004-GF	●	○	●
	3.10	.122	0.20	.008	3°	19.2	.756		N123G2-0310-0002-GF	●	○	●
	3.18	.125	0.20	.008	3°	19.2	.756		N123G2-0318-0002-GF	●	○	●
	3.18	.125	0.40	.016	3°	19.2	.756		N123G2-0318-0004-GF	●	○	●
	3.18	.125	0.80	.032	3°	19.2	.756		N123G2-0318-0008-GF	●	○	●
	3.61	.142	0.30	.012	3°	19.1	.752		N123G2-0361-0003-GF	●	○	●
	3.96	.156	0.20	.008	3°	24.4	.961	H	N123H2-0396-0002-GF	●	○	●
	3.96	.156	0.40	.016	3°	24.4	.961		N123H2-0396-0004-GF	●	○	●
	3.96	.156	0.80	.032	3°	24.4	.961		N123H2-0396-0008-GF	●	○	●
	4.00	.157	0.20	.008	3°	24.4	.961		N123H2-0400-0002-GF	●	○	●
	4.00	.157	0.40	.016	3°	24.4	.961		N123H2-0400-0004-GF	●	○	●
	4.52	.178	0.20	.008	3°	24.4	.961		N123H2-0452-0002-GF	●	○	●
	4.70	.185	0.50	.020	3°	24.1	.949		N123H2-0470-0005-GF	●	○	●
	4.75	.187	0.40	.016	3°	24.1	.949		N123H2-0475-0004-GF	●	○	●
	4.75	.187	0.80	.032	3°	24.1	.949		N123H2-0475-0008-GF	●	○	●
	4.80	.189	0.50	.020	3°	24.1	.949		N123H2-0480-0005-GF	●	○	●
	5.00	.197	0.20	.008	3°	24.4	.961		N123H2-0500-0002-GF	●	○	●
	5.00	.197	0.40	.016	3°	24.4	.961		N123H2-0500-0004-GF	●	○	●
	5.41	.213	0.20	.008	3°	24.4	.961	J	N123J2-0541-0002-GF	●	○	●
	5.56	.219	0.50	.020	3°	24.1	.949		N123J2-0556-0005-GF	●	○	●
	6.00	.236	0.20	.008	3°	24.4	.961	K	N123K2-0600-0002-GF	●	○	●
	6.35	.250	0.40	.016	3°	24.1	.949		N123K2-0635-0004-GF	●	○	●
	6.35	.250	0.50	.020	3°	24.1	.949		N123K2-0635-0005-GF	●	○	●
	6.35	.250	0.80	.032	3°	24.1	.949		N123K2-0635-0008-GF	●	○	●
	7.14	.281	0.80	.032	3°	23.8	.937		N123K2-0714-0008-GF	●	○	●
	7.92	.312	0.80	.032	3°	29	1.142	L	N123L2-0792-0008-GF	●	○	●
	8.00	.315	0.20	.008	3°	26.6	1.165		N123L2-0800-0002-GF	●	○	●
	用于装环槽											
	1.85	.073	0.10	.004	3°	19.3	.760	E	N123E2-0185-0001-GF	●	○	●
	2.15	.085	0.10	.004	3°	19.3	.760		N123E2-0215-0001-GF	●	○	●
	2.65	.104	0.20	.008	3°	19.2	.756	F	N123F2-0265-0002-GF	●	○	●
	3.15	.124	0.20	.008	3°	19.2	.756	G	N123G2-0315-0002-GF	●	○	●
	4.15	.163	0.20	.008	3°	24.4	.961	H	N123H2-0415-0002-GF	●	○	●
	5.15	.203	0.20	.008	3°	24.4	.961	J	N123J2-0515-0002-GF	●	○	●

N123系列切断切槽刀片

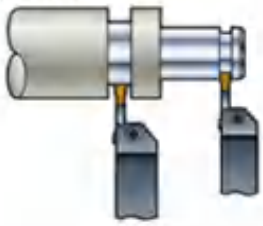

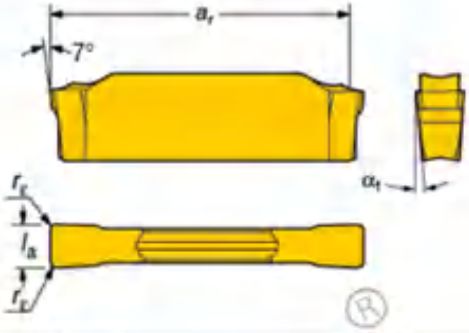

	选择标准，毫米，英寸（mm，in.） l_1 mm	l_1 in.	r_2 mm	r_2 in.	α	a_r max mm[2]	a_r max in.[2]	刀座型号	型号	材质 YL10	YL740	YL930
									CoroCut® 双刃			
 123-GM	2.00	.079	0.20	.008	4°	18.80	.740	E	N123E2-0200-0002-GM	●	○	●
	2.39	.094	0.20	.008	7°	18.40	.724		N123E2-0239-0002-GM	●	○	●
	3.00	.118	0.30	.012	6°	18.20	.716	G	N123G2-0300-0003-GM	●	○	●
	3.18	.125	0.30	.012	7°	18.00	.709		N123G2-0318-0003-GM	●	○	●
	4.00	.157	0.30	.012	6.5	23.00	.906	H	N123H2-0400-0003-GM	●	○	●
	4.75	.187	0.30	.012	5°	22.60	.890	J	N123J2-0475-0003-GM	●	○	●
	5.00	.197	0.40	.016	6°	22.90	.902		N123J2-0500-0004-GM	●	○	●
	6.00	.236	0.40	.016	6°	22.70	.894	K	N123K2-0600-0004-GM	●	○	●
	6.35	.250	0.30	.012	7°	22.60	.890		N123K2-0635-0003-GM	●	○	●
	7.92	.312	0.30	.012	7°	28.70	1.130	L	N123L2-0792-0003-GM	●	○	●
	8.00	.315	0.50	.020	7°	28.40	1.118		N123L2-0800-0005-GM	●	○	●
									CoroCut® 单刃			
	9.00	.354	0.80	.032	3°			M	N123M1-0900-0008-GM	●	○	●
	9.52	.375	0.80	.032	3°				N123M1-0953-0008-GM	●	○	●
	10.00	.394	0.80	.032	3°				N123M1-1000-0008-GM	●	○	●
	11.00	.433	0.80	.032	3°				N123M1-1100-0008-GM	●	○	●
									CoroCut® 双刃			
	9.00	.354	0.80	.032	4°	28.00	1.102	M	N123M2-0900-0008-GM	●	○	●
	10.00	.394	0.80	.032	4°	28.00	1.102		N123M2-1000-0008-GM	●	○	●

N123系列切断切槽刀片

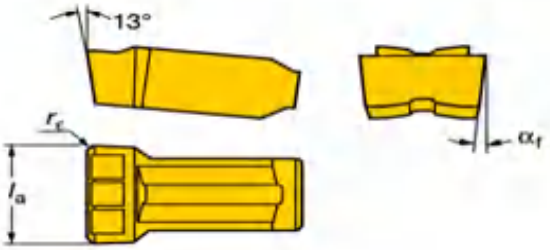

	选择标准，毫米，英寸（mm，in.）						型号	材质		
	l_2 mm	l_2 in.	r_ε mm	r_ε in.	α_f	刀座型号 1)		YL10	YL740	YL930
 123-GR							CoroCut® 单刃			
	15.00	.591	1.20	.047	5°	R	N123R1-1500-0010-GR	●	○	●
 123-GM							CoroCut® 单刃			
	12.00	.472	0.80	.032	3°	R	N123R1-1200-0008-GM	●	○	●
	12.70	.500	0.80	.032	3°		N123R1-1270-0008-GM	●	○	●
	15.00	.591	0.80	.032	3°		N123R1-1500-0008-GM	●	○	●

N123系列切断切槽刀片

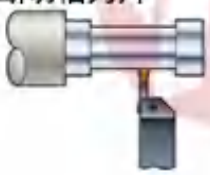

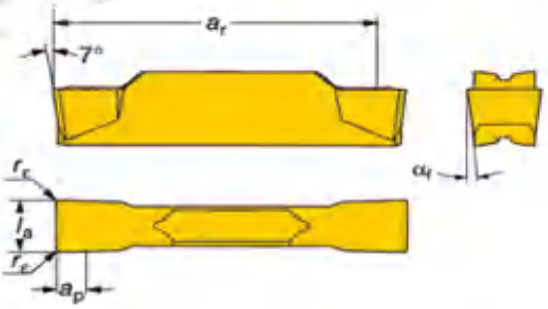

	选择标准，mm，inch						型号	材质		
	l_2	r_ε	α	a_p 最大值 1)	a_p 最大	刀座型号 2) 3)		YL10	YL740	YL930
 123-TF							CoroCut® 双刃			
	3.00	0.30	7°	18.50	2.60	G	N123G2-0300-0003-TF	●	○	●
	4.00	0.40	6.5°	23.30	3.50	H	N123H2-0400-0004-TF	●	○	●
	5.00	0.40	6.5°	23.30	3.50	J	N123J2-0500-0004-TF	●	○	●
	6.00	0.40	6°	23.30	3.80	K	N123K2-0600-0004-TF	●	○	●
	8.00	0.80	7°	28.00	4.00	L	N123L2-0800-0008-TF	●	○	●
 123-TF							CoroCut® 单刃			
	3.00	0.30	7°		2.60	G	N123G1-0300-0003-TF	●	○	●
	4.00	0.40	6°		3.50	H	N123H1-0400-0004-TF	●	○	●
	6.00	0.40	6°		3.80	K	N123K1-0600-0004-TF	●	○	●
 123-TM							CoroCut® 双刃			
	3.00	0.40	6°	18.40	3.50	G	N123G2-0300-0004-TM	●	○	●
	4.00	0.40	5.5°	23.40	4.60	H	N123H2-0400-0004-TM	●	○	●
	4.00	0.80	6°	23.40	4.60		N123H2-0400-0008-TM	●	○	●
	5.00	0.40	5.5°	23.40	4.60	J	N123J2-0500-0004-TM	●	○	●
	5.00	0.80	5.5°	23.00	4.60		N123J2-0500-0008-TM	●	○	●
	6.00	0.40	7°	23.40	4.50	K	N123K2-0600-0004-TM	●	○	●
	6.00	0.80	7°	23.00	4.50		N123K2-0600-0008-TM	●	○	●
	8.00	0.80	7°	28.00	7.00	L	N123L2-0800-0008-TM	●	○	●
	8.00	1.20	7°	27.60	7.00		N123L2-0800-0012-TM	●	○	●

N123系列切断切槽刀片

仿形铣削

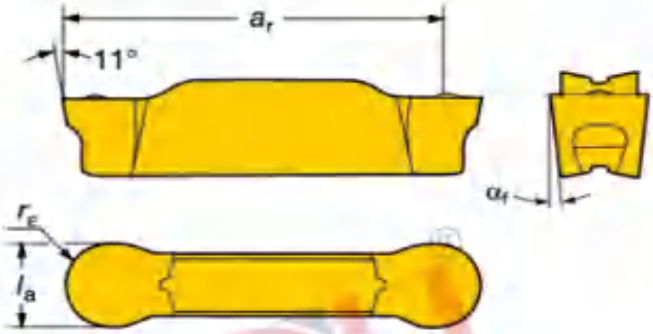

	选择标准，毫米，英寸（mm，in.）								型号	材质		
	l_n mm	l_n in.	r_ε mm	r_ε in.	α_f	a_p max mm 1)	a_p 最大值 in. 1)	刀座型号 2)		YL10	YL740	YL930
 123-RO									CoroCut® 双刃			
	2.00	.079	1.00	.039	7°	19.20	.756	E	N123E2-0200-R0	●	○	●
	2.39	.094	1.20	.047	7°	19.00	.748		N123E2-0239-R0	●	○	●
	3.00	.118	1.50	.059	7°	18.70	.736	F	N123F2-0300-R0	●	○	●
	3.18	.125	1.59	.063	7°	18.60	.732		N123F2-0318-R0	●	○	●
	3.96	.156	1.98	.078	7°	23.30	.917	H	N123H2-0396-R0	●	○	●
	4.00	.157	2.00	.079	7°	23.30	.917		N123H2-0400-R0	●	○	●
	4.50	.177	2.25	.089	7°	23.00	.906		N123H2-0450-R0	●	○	●
	4.75	.187	2.38	.094	7°	22.90	.902		N123H2-0475-R0	●	○	●
	5.00	.197	2.50	.098	7°	22.80	.898		N123H2-0500-R0	●	○	●
	6.00	.236	3.00	.118	7°	22.20	.874	J	N123J2-0600-R0	●	○	●
	6.35	.250	3.18	.125	7°	22.00	.866		N123J2-0635-R0	●	○	●
	7.14	.281	3.57	.141	7°	21.60	.850	K	N123K2-0714-R0	●	○	●
	8.00	.315	4.00	.157	7°	27.30	1.075	L	N123L2-0800-R0	●	○	●
 123-RM									CoroCut® 单刃			
	4.00	.157	2.00	.079	7°			G	N123G1-0400-RM	●	○	●
	6.00	.236	3.00	.118	7°			J	N123J1-0600-RM	●	○	●
	8.00	.315	4.00	.157	7°			L	N123L1-0800-RM	●	○	●
 123-RM									CoroCut® 双刃			
	3.00	.118	1.50	.059	7°	18.60	.732	F	N123F2-0300-RM	●	○	●
	3.18	.125	1.59	.063	7°	18.60	.732		N123F2-0318-RM	●	○	●
	4.00	.157	2.00	.079	7°	18.10	.713	G	N123G2-0400-RM	●	○	●
	4.00	.157	2.00	.079	7°	23.10	.909	H	N123H2-0400-RM	●	○	●
	4.75	.187	2.38	.094	7°	22.90	.902		N123H2-0475-RM	●	○	●
	5.00	.197	2.50	.098	7°	22.70	.894		N123H2-0500-RM	●	○	●
	6.00	.236	3.00	.118	7°	22.20	.874	J	N123J2-0600-RM	●	○	●
	6.35	.250	3.18	.125	7°	22.00	.866		N123J2-0635-RM	●	○	●
	8.00	.315	4.00	.157	7°	27.00	1.063	L	N123L2-0800-RM	●	○	●

R/LF123系列刀杆

螺钉夹紧型

NF123..B

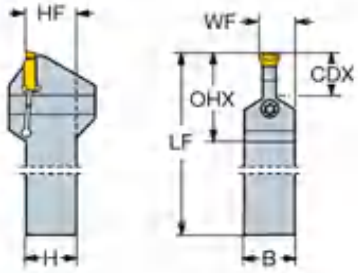

R/LF123..B

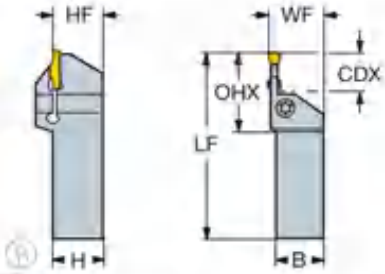

	SSC	CZC	CDX	OHX	型号	B	H	LF	WF	HF	MM	KG	MID
						尺寸，mm							
	K	25 x 25	16.0	39.0	R/LF123K16-2525BM	25.0	25.0	150.0	26.0	25.0	5.5	0.74	N123K2-0600-0004-TF
		25 x 25	32.0	58.0	R/LF123K32-2525BM	25.0	25.0	150.0	26.0	25.0	7.5	0.69	N123K2-0600-0004-TF
		32 x 25	16.0	39.0	R/LF123K16-3225BM	25.0	32.0	170.0	26.0	32.0	5.5	1.03	N123K2-0600-0004-TF
		32 x 25	32.0	58.0	R/LF123K32-3225BM	25.0	32.0	170.0	26.0	32.0	7.5	0.96	N123K2-0600-0004-TF
		32 x 32	16.0	39.0	R/LF123K16-3232BM	32.0	32.0	170.0	33.0	32.0	5.5	1.29	N123K2-0600-0004-TF
		32 x 32	32.0	58.0	R/LF123K32-3232BM	32.0	32.0	170.0	33.0	32.0	7.5	1.21	N123K2-0600-0004-TF
	L	25 x 25	16.0	41.0	R/LF123L16-2525BM	25.0	25.0	150.0	26.0	25.0	6.5	0.74	N123L2-0800-0008-TF
		25 x 25	25.0	52.0	R/LF123L25-2525BM	25.0	25.0	150.0	26.0	25.0	7.0	0.74	N123L2-0800-0008-TF
		32 x 25	25.0	52.0	R/LF123L25-3225BM	25.0	32.0	170.0	26.0	32.0	7.0	1.01	N123L2-0800-0008-TF
		32 x 25	32.0	60.0	R/LF123L32-3225BM	25.0	32.0	170.0	26.0	32.0	7.5	0.97	N123L2-0800-0008-TF
		32 x 32	32.0	60.0	R/LF123L32-3232BM	32.0	32.0	170.0	33.0	32.0	7.5	1.20	N123L2-0800-0008-TF
	M	32 x 32	32.0	63.9	R/LF123M32-3232B	32.0	32.0	250.0	34.0	32.0	9.0	2.13	N123M1-1100-0008-GM
		40 x 40	32.0	63.9	R/LF123M32-4040B	40.0	40.0	250.0	42.0	40.0	9.0	3.14	N123M1-1100-0008-GM
		40 x 40	50.0	63.9	R/LF123M50-4040B	40.0	40.0	250.0	42.0	40.0	4.5	2.78	N123M1-1100-0008-GM
	R	32 x 32	32.0	71.3	R/LF123R32-3232B	32.0	32.0	250.0	34.5	32.0	10.0	2.13	N123R1-1500-0010-GR
		40 x 40	32.0	71.3	R/LF123R32-4040B	40.0	40.0	250.0	42.5	40.0	10.0	3.15	N123R1-1500-0010-GR
		40 x 40	50.0	71.3	R/LF123R50-4040B	40.0	40.0	250.0	42.5	40.0	4.5	2.76	N123R1-1500-0010-GR
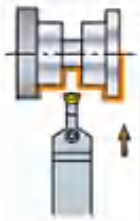	M	40 x 40	32.0	63.9	NF123M32-4040B	40.0	40.0	250.0	25.7	40.0	9.0	3.00	N123M1-1100-0008-GM
	R	40 x 40	32.0	71.3	NF123R32-4040B	40.0	40.0	250.0	27.5	40.0	10.0	3.14	N123R1-1500-0010-GR

R/LF123系列刀杆

螺钉夹紧型

R/LF123..B-S

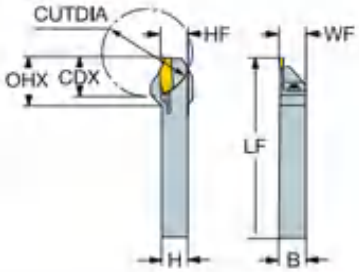

R/LF123..D

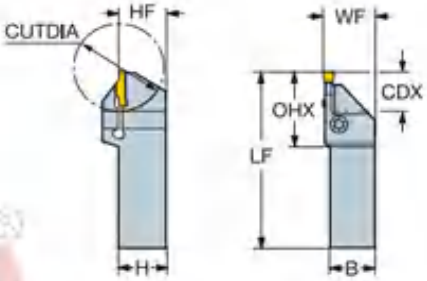

SSC	CZCgs	CDX	OHX	型号	尺寸,mm B	H	LF	WF	HF	CUTDIA	NM	KG	MID
D	16 x 16	8.0	19.6	RF123D08-1616B-S	16.0	16.0	125.0	16.0	16.0	16	2.5	0.26	N123D2-0150-0002-CM
	16 x 16	17.0	28.6	RF123D17-1616B-S	16.0	16.0	125.0	16.0	16.0	34	2.5	0.24	N123D2-0150-0002-CM
E	16 x 16	17.0	28.6	R/LF123E17-1616B-S	16.0	16.0	125.0	16.0	16.0	34	2.5	0.24	N123E2-0200-0002-CM
	16 x 16	11.0	22.6	RF123E11-1616B-S	16.0	16.0	125.0	16.0	16.0	22	2.5	0.25	N123E2-0200-0002-CM
F	16 x 16	17.0	28.6	R/LF123F17-1616B-S	16.0	16.0	125.0	16.0	16.0	34	2.5	0.24	N123F2-0250-0002-CM
G	16 x 16	17.0	28.6	R/LF123G17-1616B-S	16.0	16.0	125.0	16.0	16.0	34	3.0	0.24	N123G2-0300-0003-TF
E	20 x 20	17.0	35.5	R/LF123E17-2020D	20.0	20.0	125.0	20.5	20.0	42	4.0	0.40	N123E2-0200-0002-CM
F	20 x 20	17.0	22.4	R/LF123F17-2020D	20.0	20.0	125.0	20.5	20.0	42	4.0	0.40	N123F2-0250-0002-CM
	25 x 25	17.0	22.4	R/LF123F17-2525D	25.0	25.0	150.0	25.5	25.0	42	4.0	0.71	N123F2-0250-0002-CM
G	20 x 20	22.0	43.0	R/LF123G22-2020D	20.0	20.0	125.0	20.6	20.0	44	5.0	0.40	N123G2-0300-0003-TF
	25 x 25	22.0	43.0	R/LF123G22-2525D	25.0	25.0	150.0	25.6	25.0	44	5.0	0.69	N123G2-0300-0003-TF
H	20 x 20	22.0	44.0	R/LF123H22-2020D	20.0	20.0	125.0	20.6	20.0	52	6.0	0.40	N123H2-0400-0004-TF
	25 x 25	22.0	44.0	R/LF123H22-2525D	25.0	25.0	150.0	25.6	25.0	52	6.0	0.71	N123H2-0400-0004-TF

R/LF123三角浅槽刀杆

R/LF123

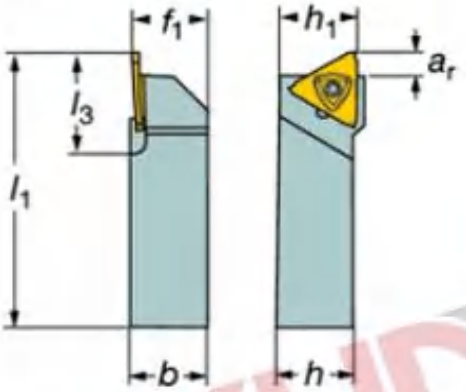

主要用途	a_r max	刀座型号 ①	型号	尺寸，mm b	f_1 ②	h	h_1	l_1	l_3
	6.4	T	RF123T06-1010BM	10	10	10	10	125	23
	6.4		RF123T06-1212BM	12	12	12	12	125	23
	6.4		RF123T06-1616BM	16	16	16	16	125	23
	6.4		RF123T06-2020BM	20	20	20	20	125	23
	6.4		RF123T06-2525BM	25	25	25	25	150	23
	6.4		RF123T06-3232BM	32	32	32	32	170	23
	6.4	U	LF123U06-1010BM	10	10	10	10	125	23
	6.4		LF123U06-1212BM	12	12	12	12	125	23
	6.4		LF123U06-1616BM	16	16	16	16	125	23
	6.4		LF123U06-2020BM	20	20	20	20	125	23
	6.4		LF123U06-2525BM	25	25	25	25	150	23
	6.4		LF123U06-3232BM	32	32	32	32	170	23

CTDP切断切槽刀杆

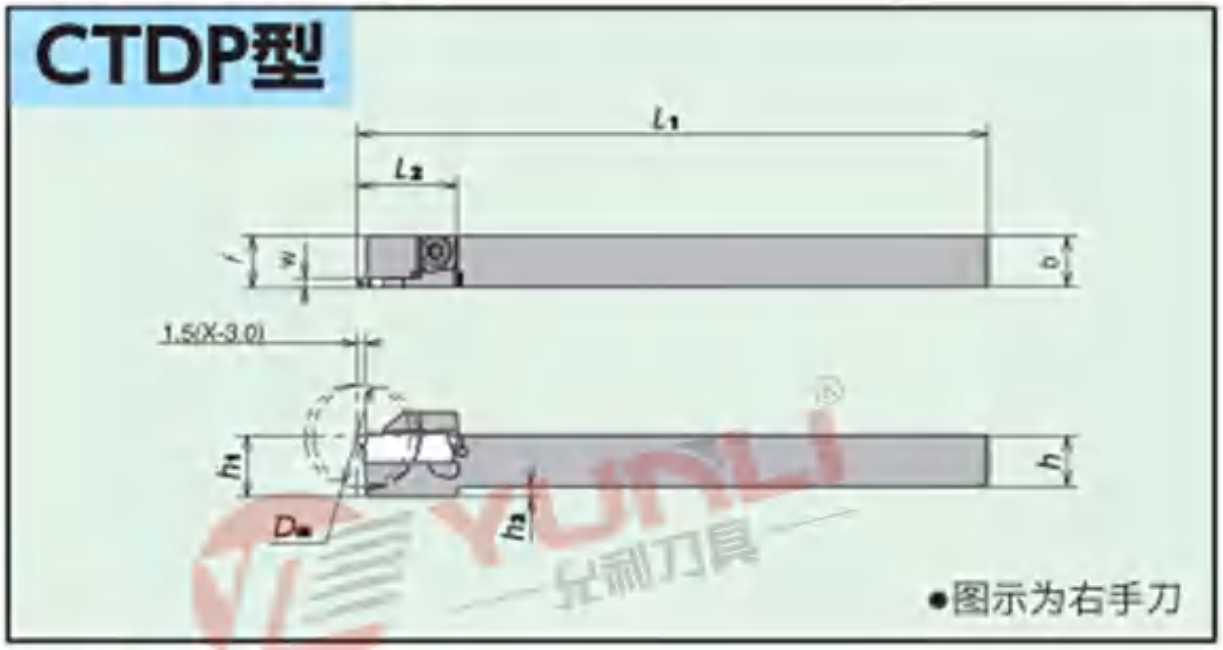

刀杆尺寸

刀杆形状	刀杆型号		库存 R	库存 L	最大切断直径 (mm) Dm	尺寸 (mm) w	h	b	L1	h1	h2	f	L2	适用刀片	零部件 紧固螺丝	零部件 扳手
																
	CTDP型	10 - 20 D20	●	●	20.0	2.0	10	10	120	10	2	10.15	19	CTDP20	LRIS-4•12	LLR-25S
		12 - 20 D20	●	●	20.0	2.0	12	12	120	12	0	12.15	19	CTDP20	LRIS-4•12	LLR-25S
		12 - 20 D25	●	●	25.4	2.0	12	12	120	12	0	12.15	22	CTDP20	LRIS-4•12	LLR-25S
		16 - 20 D25	●	●	25.4	2.0	16	16	120	16	0	16.15	22	CTDP20	LRIS-4•12	LLR-25S
		16 - 20 D32A	●	●	32.0	2.0	16	16	120	16	0	16.15	27.5	CTDP20	LRIS-5•10	LLR-28S
		16 - 25 D34A	●	●	34.0	2.5	16	16	120	16	0	16.15	27.5	CTDP25	CS0516LSH	LW-3
		20 - 20 D32A	●	●	32.0	2.0	20	20	120	20	0	20.15	29.5	CTDP20	LRIS-5•10	LLR-28S
		20 - 25 D34A	●	●	34.0	2.5	20	20	120	20	0	20.15	29.5	CTDP25	CS0516LSH	LW-3
		2012 - 20 D32A	●	●	32.0	2.0	20	12	120	20	0	12.15	29.5	CTDP20	LRIS-5•10	LLR-28S
		2012 - 25 D34A	●	●	34.0	2.5	20	12	120	20	0	12.15	29.5	CTDP25	CS0516LSH	LW-3

适用刀片

刀片形状		刀片型号		尺寸 (mm) w	θ	r_ε	L	PVD 涂层微粒子硬质合金 YL10	YL740	YL930
		CTDP	20N	2.0	0°	0.05	19.1	●	●	●
			20N02	2.0	0°	0.2	19.1	●	●	●
			20R6	2.0	6°	0.05	19.1	●	●	●
			20R15	2.0	15°	0.05	19.1	●	●	●
		CTDP	25N	2.5	0°	0.05	21.2	●	●	●
			25N02	2.5	0°	0.2	21.2	●	●	●
			25R6	2.5	6°	0.05	21.2	●	●	●
			25R15	2.5	15°	0.05	21.2	●	●	●

● CGWSR/L-W切断切槽刀杆

型号	W	ar	h	b	L1	L2	h1	f
CGWSR/L1616-W30	3	12	16	16	125	34	16	16.4
CGWSR/L2020-W30	3	12	20	20	150	34	20	20.4
CGWSR/L2525-W30	3	12	25	25	150	34	25	25.4
CGWSR/L2020-W40	4	13	20	20	150	39	20	20.4
CGWSR/L2525-W40	4	13	25	25	150	39	25	25.4
CGWSR/L2020-W50	5	13	20	20	150	39	20	20.4
CGWSR/L2525-W50	5	13	25	25	150	39	25	25.4

● CGWSR/L-W-L切断切槽刀杆

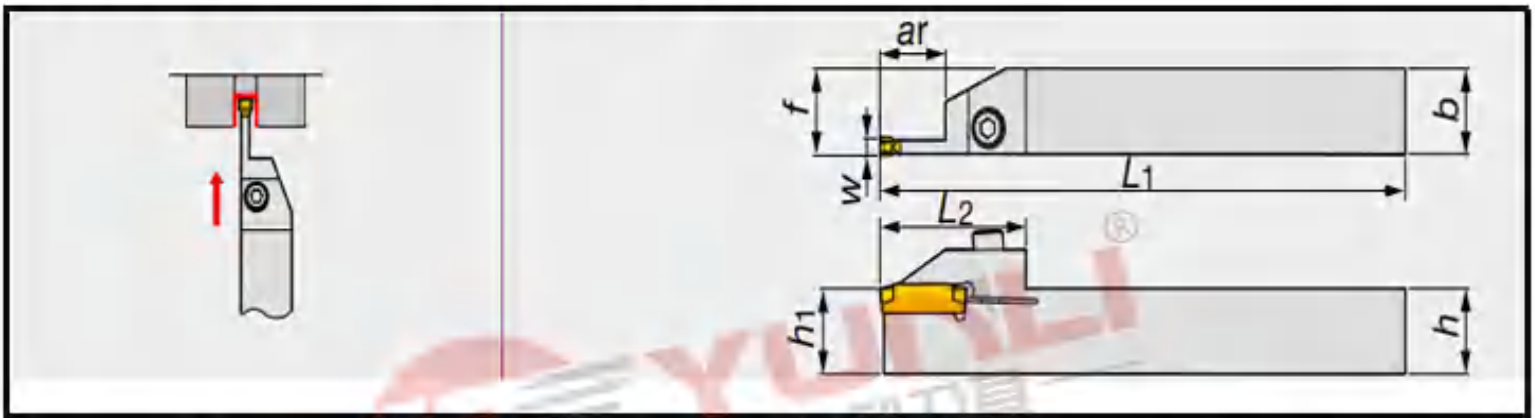

型号	W	ar	h	b	L1	L2	h1	f
CGWSR/L1616-W20-L	2	15	16	16	125	37	16	16.2
CGWSR/L2020-W20-L	2	15	20	20	150	37	20	20.2
CGWSR/L2525-W20-L	2	15	25	25	150	37	25	25.2
CGWSR/L1616-W30-L	3	16.5、17.5	16	16	125	37	16	16.4
CGWSR/L2020-W30-L	3	16.5、17.5	20	20	150	37	20	20.4
CGWSR/L2525-W30-L	3	16.5、17.5	25	25	150	37	25	25.4
CGWSR/L2020-W40-L	4	21、21.5	20	20	150	42	20	20.4
CGWSR/L2525-W40-L	4	21、21.5	25	25	150	42	25	25.4
CGWSR/L2020-W50-L	5	21	20	20	150	42	20	20.4
CGWSR/L2525-W50-L	5	21	25	25	150	42	25	25.4

WGE切断切槽刀片

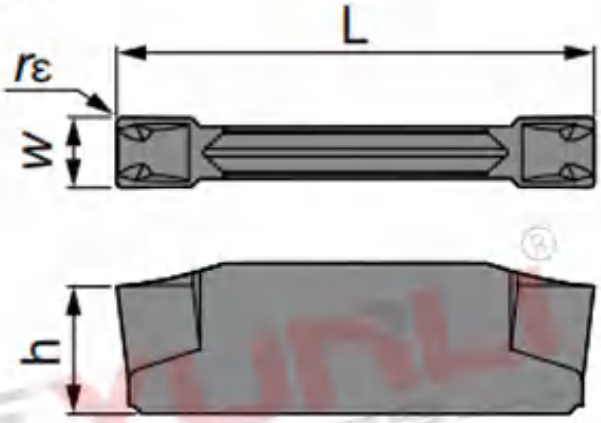

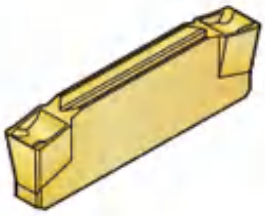

型号	$W^{+0.1}_{0}$	rε	涂层			L	h
			YL10	YL740	YL930		
WGE20	2	0.2	●	●	○	20	4.7
WGE30	3	0.2	●	●	○	20	5.5
WGE40	4	0.2	●	●	○	25	5.7
WGE50	5	0.2	●	●	○	25	5.9

WGER/L切断刀片

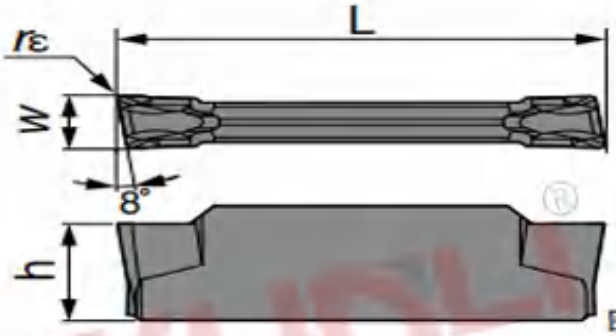

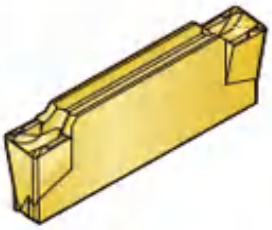

图中所示为右手 (R) 型号。

型号	$W^{+0.1}_{0}$	rε	涂层			L	h
			YL10	YL740	YL930		
WGE20R/L	2	0.2	●	●	○	20	4.7
WGE30R/L	3	0.2	●	●	○	20	5.5
WGE40R/L	4	0.2	●	●	○	25	5.7
WGE50R/L	5	0.2	●	●	○	25	5.9

DGTR/L-B-D-SH切断刀杆

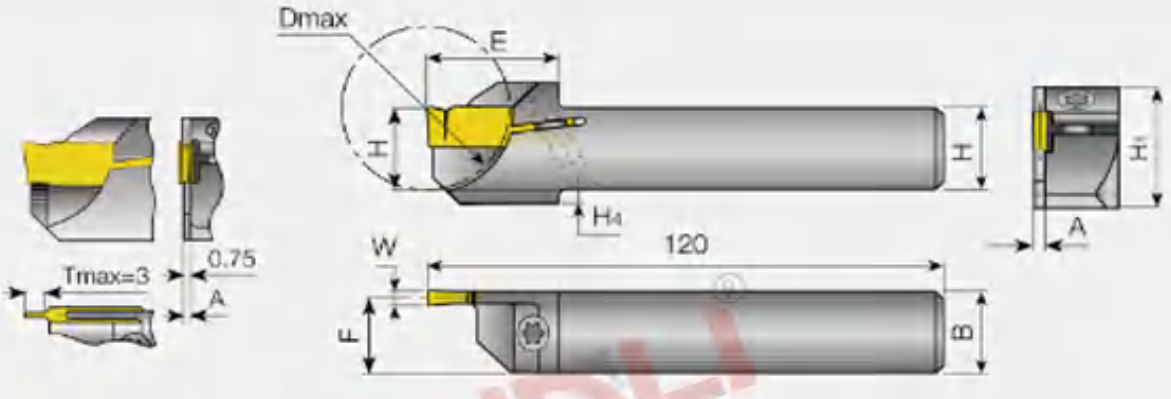

H	W	规格	B	A	F	E	Dmax	H_1	H_4
10	1.4	DGTR/L 10B-1.4D20SH	10	1.0	9.5	18	20	13.7	—
10	1.0/1.5	DGTR/L 10B-1.5D20SH	10	1.0	9.4	19	20	15.7	2
10	1.0/2.0/2.2	DGTR/L 10B-2D20SH	10	1.6(1)	9.2	19	20	15.7	2
12	1.4	DGTR/L 12B-1.4D24SH	12	1.0	11.5	19	24	15.7	—
12	1.0/1.5	DGTR/L 12B-1.5D24SH	12	1.0	11.4	19	24	15.7	—
12	1.0/2.0/2.2	DGTR/L 12B-2D24SH	12	1.6(1)	11.2	19	24	15.7	—
12	1.0/3.0/3.1	DGTR/L 12B-3D24SH	12	2.4(1)	10.8	19	24	15.7	—
16	1.0/1.5	DGTR/L 16B-1.5D25SH	16	1.0	15.4	19.5	25.4	19.7	—
16	1.0/2.0/2.2	DGTR/L 16B-2D25SH	16	1.6(1)	15.2	19.5	25.4	19.7	—
16	1.0/3.0/3.1	DGTR/L 16B-3D25SH	16	2.4(1)	14.8	19.5	25.4	19.7	
20	1.0/1.5	DGTR/L 20B-1.5D25SH	20	1.0	19.4	19.5	25.4	23.7	—
20	1.0/2.0/2.2	DGTR/L 20B-2D25SH	20	1.6(1)	19.2	19.5	25.4	23.7	—
20	1.0/3.0/3.1	DGTR/L 20B-3D25SH	20	2.4(1)	18.8	19.5	25.4	23.7	—

DGTR/L-B-D切断刀杆

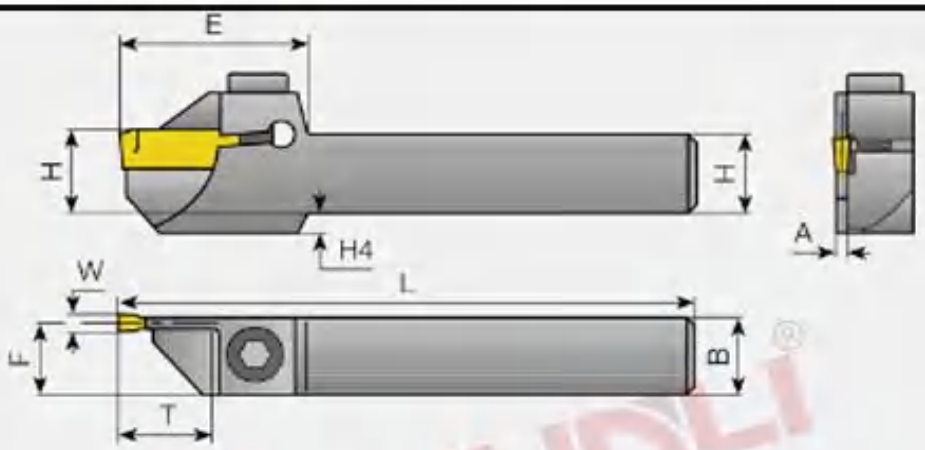

H	W[1]	规格	B	A	L	E	H_4	T max[2]	F
10	1.4	DGTR/L 10B-1.4D20	10	1	140	23.6	2	10	9.5
12	1.4	DGTR/L 12B-1.4D30	12.5	1	140	29.6	3.5	15	11.5
16	1.4	DGTR/L 16B-1.4D30	16	1	140	29.6	—	15	15.5
20	1.4	DGTR/L 20B-1.4D30	20	1	140	29.6	—	15	19.5
10	1.0/2.0/2.2	DGTR/L 10B-2D30	10	1.6	140	29.6	6.6	15	9.2
12	1.0/2.0/2.2	DGTR/L 12B-2D30	12	1.6	140	29.6	3.5	15	11.2
16	1.0/2.0/2.2	DGTR/L 16B-2D32	16	1.6	140	30.6	—	16	15.2
20	1.0/2.0/2.2	DGTR/L 20B-2D35	20	1.6	140	32.1	—	17.5	19.2
25	1.0/2.0/2.2	DGTR/L 25B-2D35	25	1.6	140	32.1	—	17.5	24.2
12	1.0/3.0/3.1	DGTR/L 12B-3D30	12	2.4	140	29.6	3.5	15	10.8
16	1.0/3.0/3.1	DGTR/L 16B-3D35	16	2.4	140	32.1	2.6	16	14.8
20	1.0/3.0/3.1	DGTR/L 20B-3D40	20	2.4	140	35.6	—	20	18.8
25	1.0/3.0/3.1	DGTR/L 25B-3D40	25	2.4	140	35.6	—	20	23.8

GTPA切断刀片

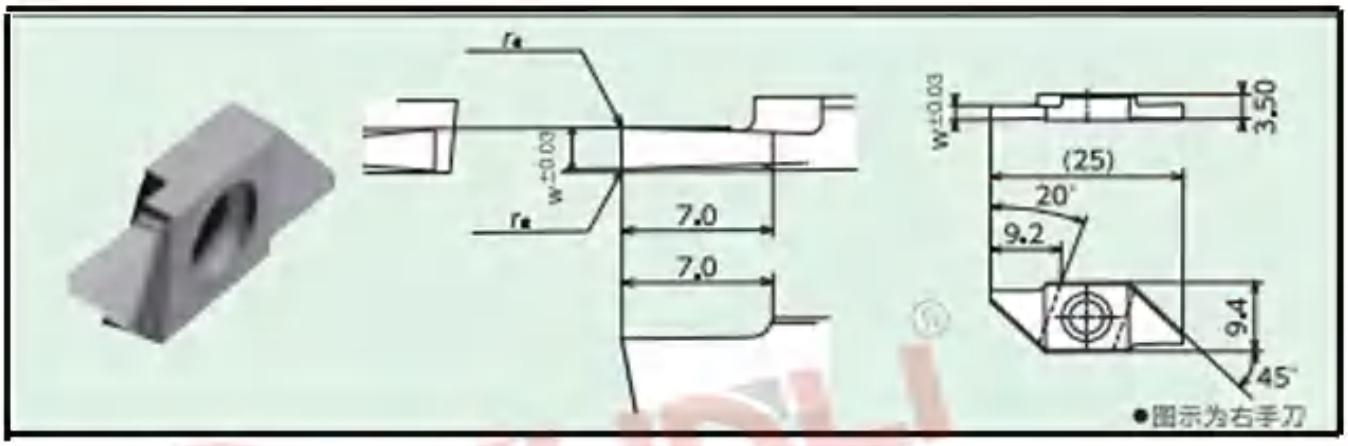

刀片型号		尺寸(mm)					涂层		
		w	有效加工深度	s	s_1	r_ε	YL10	YL740	YL930
GTPA	20 FRN 01-SH	2.0	3.0	4.0	2.0	0.1以下	●	○	●
	20 FRN 01	2.0	5.0	6.0	4.0	0.1以下	●	○	●
	20 FRN 01	2.0	6.0	—	—	0.1以下	●	○	●
	25 FRN 01-081	2.5	3.0	4.0	1.0	0.1以下	●	○	●
	25 FRN 01	2.5	5.0	6.0	3.0	0.1以下	●	○	●
	25 FRN 01	2.5	6.0	—	—	0.1以下	●	○	●

GTPS切断切槽刀片

GTPS型

刀片形状	刀片型号		尺寸(mm)				涂层		
			w	r_ε	有效加工深度	L	YL10	YL740	YL930
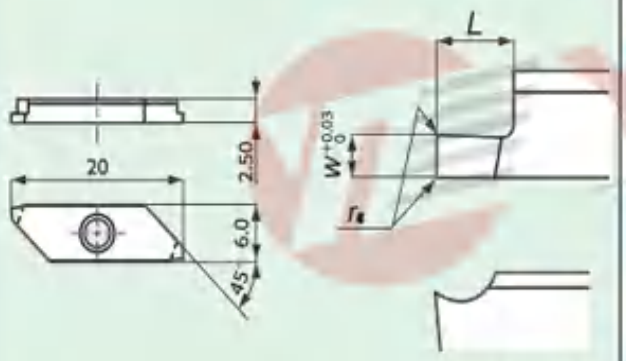	GTPS	075FR	0.75	0.0	1.0	1.5	●	○	●
		095FR	0.95	0.0	1.5	2.0	●	○	●
		100FR	1.00	0.0	1.5	2.0	●	○	●
		120FR	1.20	0.0	2.5	3.0	●	○	●
		150FR	1.50	0.0	2.5	3.0	●	○	●
		200FR	2.00	0.0	2.5	3.0	●	○	●

GTTR/L切槽刀杆

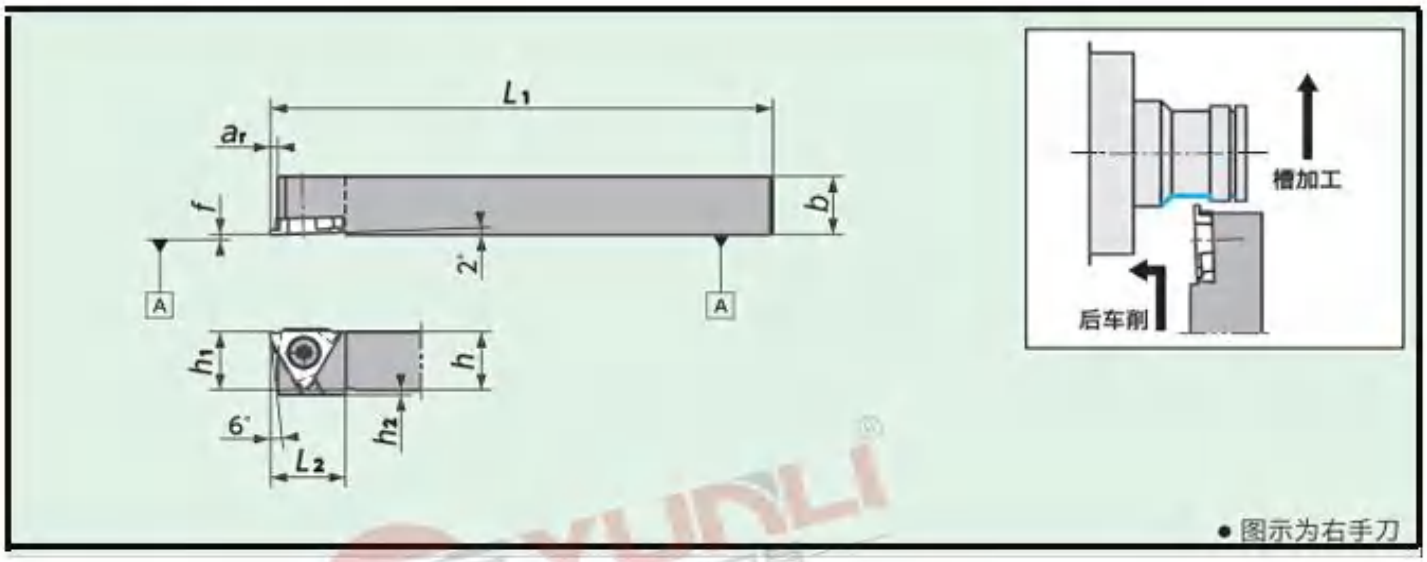

刀杆尺寸

刀杆形状	刀杆型号		库存 R	库存 L	尺寸(mm) h	b	L_1	h_1	a_r	f	L_2	h_2	适用刀片	零部件 紧固螺丝	零部件 扳手
	GTTR/L	08 F00	●	●	8	8	80	8	1.6	0.0	15	5	TBMH32	M4*10	T15
		08 K00	●	●	8	8	120	8	1.6	0.0	15	5			
		10 F00	●	●	10	10	80	10	1.6	0.0	15	3			
		10 K00	●	●	10	10	120	10	1.6	0.0	15	3			
		12 F00	●	●	12	12	80	12	1.6	0.0	15	1			
		12 K00	●	●	12	12	120	12	1.6	0.0	15	1			
		16 H00	●	●	16	16	100	16	1.6	0.0	15	0			
		16 K00	●	●	16	16	120	16	1.6	0.0	15	0			
		20 K00	●	●	20	20	125	20	2.7	0.0	15	0			
		25 M00	●	●	25	25	150	25	2.7	0.0	15	0			

NTGWR/L切断切槽刀杆

NTGW型

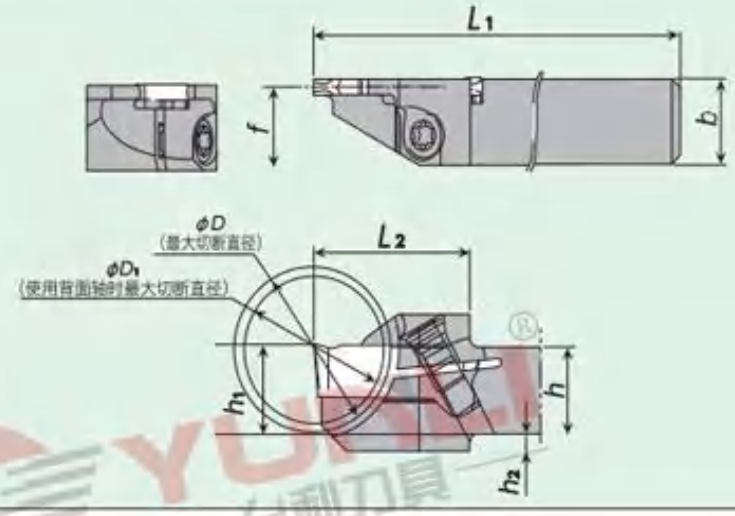

●图示为左手刀

刀杆尺寸

刀杆型号		库存 R	库存 L	最大切断直径 (mm) φD	使用背面轴时最大切断直径 (mm) φD1	尺寸(mm) w	h	b	L1	h1	f	L2	h2	适用刀片	零部件 紧固螺丝	零部件 扳手
NTGW R/L	1010-2	●	●	19.8	17.0	2.2	10	10	120	10	9.2	19	2	KT□W22	SR-16-236/P	TORX-T15
	1212-2	●	●	23.6	21.0	2.2	12	12	120	12	11.2	19	0			
	1616-2	●	●	24.6	22.0	2.2	16	16	120	16	15.2	19.5	0			
	2012-2	●	●	37.0	34.0	2.2	20	12	120	12	11.2	27	0			
	2020-2	●	●	37.0	34.0	2.2	20	20	120	20	15.2	27	0			

SMALR/L切断刀杆

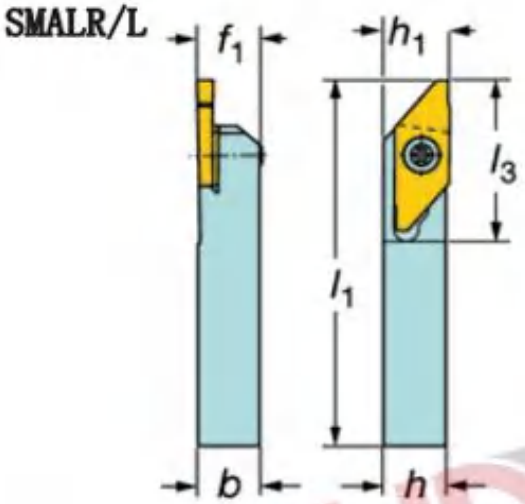

刀座型号①	订货号	尺寸，mm						基准刀片	Nm②
		b	f_1	h	h_1	l_1	l_3		
3	SMALR/L 1010K 3	10	10	10	10	125	27	MAxL 3..	1.2
	SMALR/L 1212K 3	12	12	12	12	125	27	MAxL 3..	1.2
	SMALR/L 1616K 3	16	16	16	16	125	27	MAxL 3..	1.2

SMALR-X切断刀杆

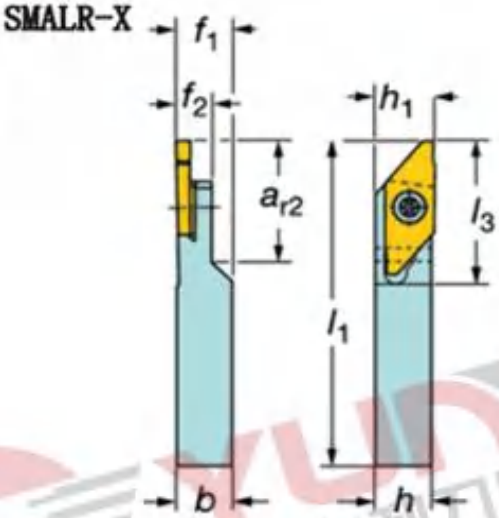

刀座型号①	订货号	尺寸，mm								基准刀片	Nm②
		a_{r2} max	b	f_1	f_2	h	h_1	l_1	l_3		
3	SMALR 1010K 3-X	20	10	10	7.5	10	10	125	27	MAxR 3..	1.2
	SMALR 1212K 3-X	20	12	12	7.5	12	12	125	27	MAxR 3..	1.2

KGMUR/L切断切槽刀杆

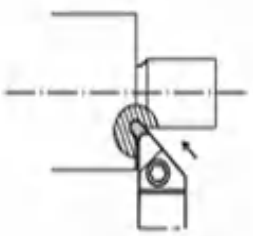

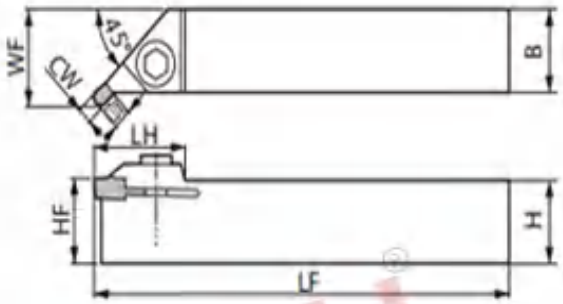

• 本图为右手(R)

型 号	尺 寸(mm)									刃宽 CW(mm)		零 件			
												紧固螺钉		扳手	
	H	HF	B	LF	LH	WF				MIN.	MAX.				
KGMUR2020K	20	20	20	125	23.5	23.6				3.0	5.0	HH5X25		LW-4	
KGMUL2020K	20	20	20	125	23.5	23.6				3.0	5.0	HH5X25		LW-4	
KGMUR2525M	25	25	25	150	28.5	28.6				3.0	5.0	HH5X25		LW-4	
KGMUL2525M	25	25	25	150	28.5	28.6				3.0	5.0	HH5X25		LW-4	

KGMMR/L切断切槽刀杆

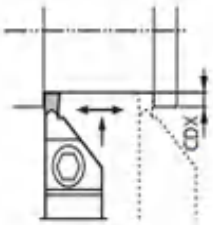

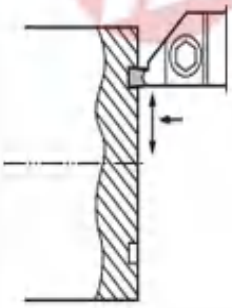

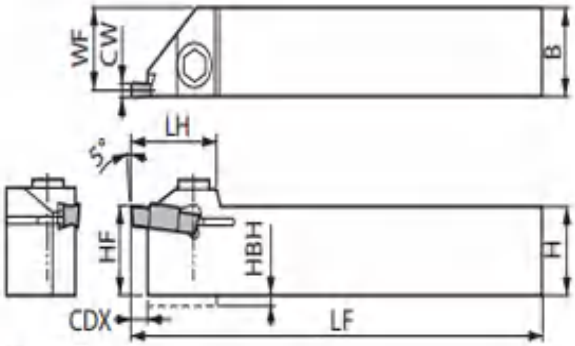

• 本图为右手(R)

KGMSR/L切断切槽刀杆

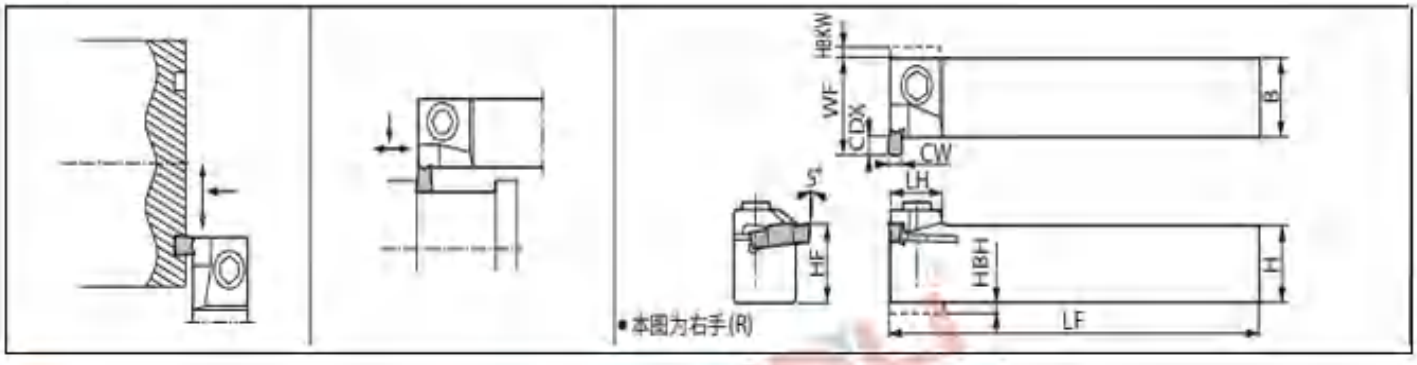

刀杆尺寸

型 号	尺 寸(mm)									刃宽 CW(mm)		零 件			
												螺钉		扳手	
	H	HF	HBH	B	LF	LH	WF	HBKW	CDX	MIN.	MAX.				
KGMMR1616H-3	16	16		16	100	–	–		–	3.0	5.0		HH5X25		LW-4
KGMML1616H-3	16	16		16	100	–	–		–	3.0	5.0		HH5X25		LW-4
KGMMR2020K-3	20	20		20	125	–	–		–	3.0	5.0		HH5X25		LW-4
KGMML2020K-3	20	20		20	125	–	–		–	3.0	5.0		HH5X25		LW-4
KGMMR2525M-3	25	25		25	150	25	23.8		–	3.0	5.0		HH5X25		LW-4
KGMML2525M-3	25	25		25	150	25	23.8		–	3.0	5.0		HH5X25		LW-4
KGMSR1616H-3	16	16		16	100	–	–		–	3.0	5.0		HH5X25		LW-4
KGMSL1616H-3	16	16		16	100	–	–		–	3.0	5.0		HH5X25		LW-4
KGMSR2020K-3	20	20		20	125	–	–		–	3.0	5.0		HH5X25		LW-4
KGMSL2020K-3	20	20		20	125	–	–		–	3.0	5.0		HH5X25		LW-4
KGMSR2525M-3	25	25		25	150	17	30		–	3.0	5.0		HH5X25		LW-4
KGMSL2525M-3	25	25		25	150	17	30		–	3.0	5.0		HH5X25		LW-4

GEPI

Repeatability ±0.025

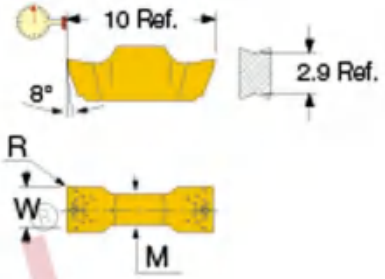

型号	尺寸，mm						
	$W^{\pm 0.02}$	$R^{\pm 0.03}$	T^{max}	M	YL10	YL740	YL930
GEPI 1.85-0.10 (1)	1.85	0.10	2.50	1.8	●	●	○
GEPI 1.96-0.10	1.96	0.10	2.50	1.8	●	●	○
GEPI 1.96-0.15	1.96	0.15	2.50	1.8	●	●	○
GEPI 2.00-0.10	2.00	0.10	9.00	1.8	●	●	○
GEPI 2.22-0.10	2.22	0.10	9.00	1.8	●	●	○
GEPI 2.22-0.15	2.22	0.15	9.00	1.8	●	●	○
GEPI 2.39-0.10	2.39	0.10	9.00	2.2	●	●	○
GEPI 2.39-0.15	2.39	0.15	9.00	2.2	●	●	○
GEPI 2.47-0.20	2.47	0.20	9.00	2.2	●	●	○
GEPI 2.50-0.10	2.50	0.10	9.00	2.2	●	●	○
GEPI 2.50-0.20	2.50	0.20	9.00	2.2	●	●	○
GEPI 2.70-0.20	2.70	0.20	9.00	2.2	●	●	○
GEPI 3.00-0.20	3.00	0.20	9.00	2.2	●	●	○
GEPI 3.18-0.20	3.18	0.20	9.00	2.2	●	●	○

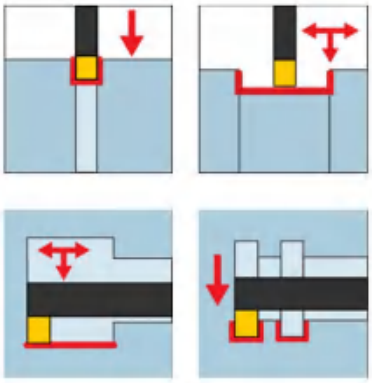

◇ GEPI（W<M）

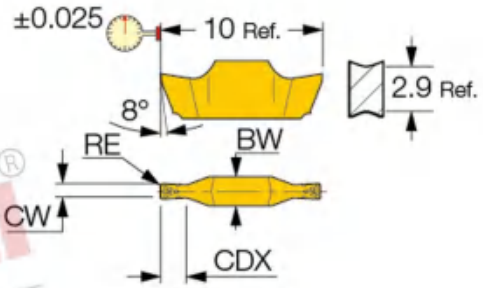

型号	尺寸，mm								
	CW	RE	CWTOL	RETOL	CDX	BW	YL10	YL740	YL930
GEPI 1.00-0.10	1.00	0.10	0.020	0.030	1.60	1.80	●	●	○
GEPI 1.00-0.50	1.00	0.50	0.020	0.030	1.60	1.80	●	●	○
GEPI 1.04-0.00	1.04	0.00	0.020	0.030	1.60	1.80	●	●	○
GEPI 1.20-0.00	1.20	0.00	0.020	0.030	1.80	1.80	●	●	○
GEPI 1.25-0.10	1.25	0.10	0.020	0.030	2.00	1.80	●	●	○
GEPI 1.40-0.00	1.40	0.00	0.020	0.030	2.00	1.80	●	●	○
GEPI 1.47-0.00	1.47	0.00	0.020	0.030	2.00	1.80	●	●	○
GEPI 1.50-0.10	1.50	0.10	0.020	0.030	2.00	1.80	●	●	○
GEPI 1.57-0.15	1.57	0.15	0.020	0.030	2.00	1.80	●	●	○
GEPI 1.70-0.05	1.70	0.05	0.020	0.030	2.50	1.80	●	●	○
GEPI 1.78-0.15	1.78	0.15	0.020	0.030	2.50	1.80	●	●	○

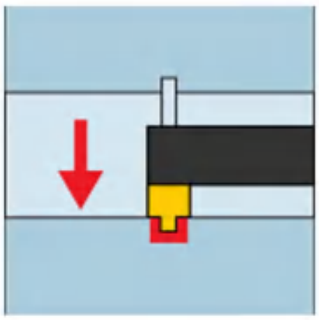

N123-RS

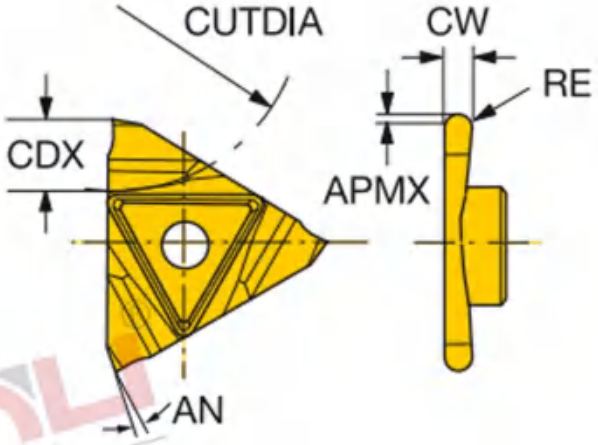

SSC	CW	RE	CDX	订货号	AN	CUTDIA	CWTOLL	CWTOLU	RETOLL	RETOLU	YL10	YL740	YL930
					尺寸，mm								
T	0.50	0.25	1.5	N123T3-0050-RS	7°	100.00	-0.020	0.020	-0.050	0.050	●	●	○
	0.80	0.40	1.8	N123T3-0080-RS	7°	100.00	-0.020	0.020	-0.050	0.050	●	●	○
	1.00	0.50	2.2	N123T3-0100-RS	7°	100.00	-0.020	0.020	-0.050	0.050	●	●	○
	1.50	0.75	3.3	N123T3-0150-RS	7°	100.00	-0.020	0.020	-0.050	0.050	●	●	○
	2.00	1.00	4.0	N123T3-0200-RS	7°	100.00	-0.020	0.020	-0.050	0.050	●	●	○
	2.50	1.25	5.0	N123T3-0250-RS	7°	100.00	-0.020	0.020	-0.050	0.050	●	●	○
	3.00	1.50	6.0	N123T3-0300-RS	7°	100.00	-0.020	0.020	-0.050	0.050	●	●	○
U	0.50	0.25	1.5	N123U3-0050-RS	7°	100.00	-0.020	0.020	-0.050	0.050	●	●	○
	0.80	0.40	1.8	N123U3-0080-RS	7°	100.00	-0.020	0.020	-0.050	0.050	●	●	○
	1.00	0.50	2.2	N123U3-0100-RS	7°	100.00	-0.020	0.020	-0.050	0.050	●	●	○
	1.50	0.75	3.3	N123U3-0150-RS	7°	100.00	-0.020	0.020	-0.050	0.050	●	●	○
	2.00	1.00	4.0	N123U3-0200-RS	7°	100.00	-0.020	0.020	-0.050	0.050	●	●	○
	3.00	1.50	6.0	N123U3-0300-RS	7°	100.00	-0.020	0.020	-0.050	0.050	●	●	○

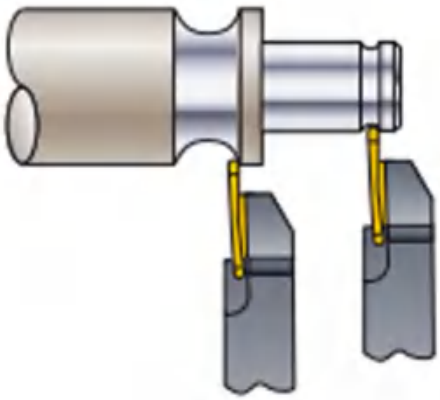

N123-GS

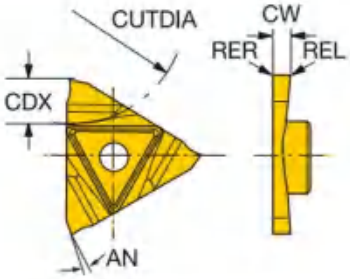

SSC	CW	REL	RER	CDX	订货号	AN	CUTDIA	CWTOLL	CWTOLU	RETOLL	RETOLU	YL10	YL740	YL930
						尺寸，mm								
T	0.50	0.00	0.00	1.5	N123T3-0050-0000-GS	7°	100.00	-0.020	0.020	0.000	0.050	●	●	○
	0.60	0.00	0.00	1.6	N123T3-0060-0000-GS	7°	100.00	-0.020	0.020	0.000	0.050	●	●	○
	0.70	0.00	0.00	1.7	N123T3-0070-0000-GS	7°	100.00	-0.020	0.020	0.000	0.050	●	●	○
	0.80	0.00	0.00	1.8	N123T3-0080-0000-GS	7°	100.00	-0.020	0.020	0.000	0.050	●	●	○
	0.90	0.00	0.00	2.0	N123T3-0090-0000-GS	7°	100.00	-0.020	0.020	0.000	0.050	●	●	○
	1.00	0.00	0.00	2.2	N123T3-0100-0000-GS	7°	100.00	-0.020	0.020	0.000	0.050	●	●	○
	1.20	0.00	0.00	2.3	N123T3-0120-0000-GS	7°	100.00	-0.020	0.020	0.000	0.050	●	●	○
	1.40	0.00	0.00	2.7	N123T3-0140-0000-GS	7°	100.00	-0.020	0.020	0.000	0.050	●	●	○
	1.50	0.00	0.00	3.0	N123T3-0150-0000-GS	7°	100.00	-0.020	0.020	0.000	0.050	●	●	○
	1.60	0.00	0.00	3.2	N123T3-0160-0000-GS	7°	100.00	-0.020	0.020	0.000	0.050	●	●	○
	1.70	0.00	0.00	3.3	N123T3-0170-0000-GS	7°	100.00	-0.020	0.020	0.000	0.050	●	●	○
	1.95	0.00	0.00	3.9	N123T3-0195-0000-GS	7°	100.00	-0.020	0.020	0.000	0.050	●	●	○
	2.00	0.00	0.00	4.0	N123T3-0200-0000-GS	7°	100.00	-0.020	0.020	0.000	0.050	●	●	○
	2.25	0.00	0.00	4.5	N123T3-0225-0000-GS	7°	100.00	-0.020	0.020	0.000	0.050	●	●	○
	2.50	0.00	0.00	5.0	N123T3-0250-0000-GS	7°	100.00	-0.020	0.020	0.000	0.050	●	●	○
	2.75	0.00	0.00	5.5	N123T3-0275-0000-GS	7°	100.00	-0.020	0.020	0.000	0.050	●	●	○
	3.00	0.00	0.00	6.0	N123T3-0300-0000-GS	7°	100.00	-0.020	0.020	0.000	0.050	●	●	○
	3.18	0.00	0.00	6.0	N123T3-0318-0000-GS	7°	100.00	-0.020	0.020	0.000	0.050	●	●	○

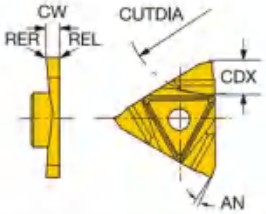

SSC	CW	REL	RER	CDX	订货号	AN	CUTDIA	CWTOLL	CWTOLU	RETOLL	RETOLU	YL10	YL740	YL930
						尺寸，mm								
U	0.50	0.00	0.00	1.5	N123U3-0050-0000-GS	7°	100.00	-0.020	0.020	0.000	0.050	●	●	○
	0.70	0.00	0.00	1.7	N123U3-0070-0000-GS	7°	100.00	-0.020	0.020	0.000	0.050	●	●	○
	0.80	0.00	0.00	1.8	N123U3-0080-0000-GS	7°	100.00	-0.020	0.020	0.000	0.050	●	●	○
	0.90	0.00	0.00	2.0	N123U3-0090-0000-GS	7°	100.00	-0.020	0.020	0.000	0.050	●	●	○
	1.00	0.00	0.00	2.2	N123U3-0100-0000-GS	7°	100.00	-0.020	0.020	0.000	0.050	●	●	○
	1.20	0.00	0.00	2.3	N123U3-0120-0000-GS	7°	100.00	-0.020	0.020	0.000	0.050	●	●	○
	1.40	0.00	0.00	2.7	N123U3-0140-0000-GS	7°	100.00	-0.020	0.020	0.000	0.050	●	●	○
	1.50	0.00	0.00	3.0	N123U3-0150-0000-GS	7°	100.00	-0.020	0.020	0.000	0.050	●	●	○
	1.60	0.00	0.00	3.2	N123U3-0160-0000-GS	7°	100.00	-0.020	0.020	0.000	0.050	●	●	○
	1.70	0.00	0.00	3.3	N123U3-0170-0000-GS	7°	100.00	-0.020	0.020	0.000	0.050	●	●	○
	2.00	0.00	0.00	4.0	N123U3-0200-0000-GS	7°	100.00	-0.020	0.020	0.000	0.050	●	●	○
	2.25	0.00	0.00	4.5	N123U3-0225-0000-GS	7°	100.00	-0.020	0.020	0.000	0.050	●	●	○
	2.50	0.00	0.00	5.0	N123U3-0250-0000-GS	7°	100.00	-0.020	0.020	0.000	0.050	●	●	○
	3.00	0.00	0.00	6.0	N123U3-0300-0000-GS	7°	100.00	-0.020	0.020	0.000	0.050	●	●	○

L/R123-CS

L123T3-CS

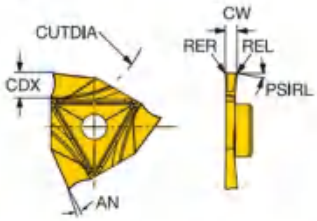

R123T3-CS

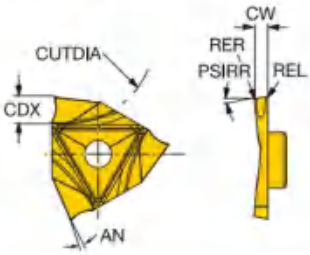

SSC	CW	REL	RER	CDX	PSIRL	PSIRR	订货号	AN	CUTDIA	CWTOLL	CWTOLU	RETOLL	RETOLU	YL 10	YL 740	YL 930
								尺寸，mm								
T	1.00	0.00	0.00	4.2	5.0		L123T3-0100-0500-CS	7°	50.00	-0.100	0.000	0.000	0.050	●	○	●
	1.00	0.00	0.00	4.2	10.0		L123T3-0100-1000-CS	7°	50.00	-0.100	0.000	0.000	0.050	●	○	●
	2.00	0.00	0.00	6.3	10.0		L123T3-0200-1000-CS	7°	100.00	-0.100	0.000	0.000	0.050	●	○	●
	2.00	0.00	0.00	6.3	15.0		L123T3-0200-1500-CS	7°	100.00	-0.100	0.000	0.000	0.050	●	○	●
	1.00	0.00	0.00	4.2		5.0	R123T3-0100-0500-CS	7°	50.00	-0.100	0.000	0.000	0.050	●	○	●
	1.00	0.00	0.00	4.2		10.0	R123T3-0100-1000-CS	7°	50.00	-0.100	0.000	0.000	0.050	●	○	●
	1.00	0.00	0.00	4.2		15.0	R123T3-0100-1500-CS	7°	50.00	-0.100	0.000	0.000	0.050	●	○	●
	1.50	0.00	0.00	6.3		5.0	R123T3-0150-0500-CS	7°	100.00	-0.100	0.000	0.000	0.050	●	○	●
	1.50	0.00	0.00	6.3		10.0	R123T3-0150-1000-CS	7°	100.00	-0.100	0.000	0.000	0.050	●	○	●
	1.50	0.00	0.00	6.3		15.0	R123T3-0150-1500-CS	7°	100.00	-0.100	0.000	0.000	0.050	●	○	●
	2.00	0.00	0.00	6.3		5.0	R123T3-0200-0500-CS	7°	100.00	-0.100	0.000	0.000	0.050	●	○	●
	2.00	0.00	0.00	6.3		10.0	R123T3-0200-1000-CS	7°	100.00	-0.100	0.000	0.000	0.050	●	○	●
	2.00	0.00	0.00	6.3		15.0	R123T3-0200-1500-CS	7°	100.00	-0.100	0.000	0.000	0.050	●	○	●

L123U3-CS

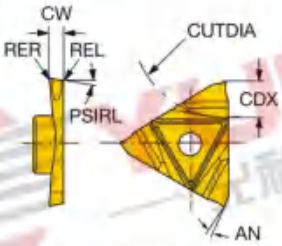

R123U3-CS

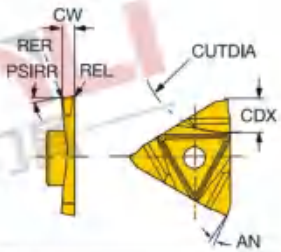

SSC	CW	REL	RER	CDX	PSIRL	PSIRR	订货号	AN	CUTDIA	CWTOLL	CWTOLU	RETOLL	RETOLU	YL 10	YL 740	YL 930
								尺寸，mm								
U	1.00	0.00	0.00	4.2	5.0		L123U3-0100-0500-CS	7°	50.00	-0.100	0.000	0.000	0.050	●	○	●
	1.00	0.00	0.00	4.2	10.0		L123U3-0100-1000-CS	7°	50.00	-0.100	0.000	0.000	0.050	●	○	●
	1.00	0.00	0.00	4.2	15.0		L123U3-0100-1500-CS	7°	50.00	-0.100	0.000	0.000	0.050	●	○	●
	1.50	0.00	0.00	6.3	5.0		L123U3-0150-0500-CS	7°	100.00	-0.100	0.000	0.000	0.050	●	○	●
	1.50	0.00	0.00	6.3	10.0		L123U3-0150-1000-CS	7°	100.00	-0.100	0.000	0.000	0.050	●	○	●
	1.50	0.00	0.00	6.3	15.0		L123U3-0150-1500-CS	7°	100.00	-0.100	0.000	0.000	0.050	●	○	●
	2.00	0.00	0.00	6.3	5.0		L123U3-0200-0500-CS	7°	100.00	-0.100	0.000	0.000	0.050	●	○	●
	2.00	0.00	0.00	6.3	10.0		L123U3-0200-1000-CS	7°	100.00	-0.100	0.000	0.000	0.050	●	○	●
	2.00	0.00	0.00	6.3	15.0		L123U3-0200-1500-CS	7°	100.00	-0.100	0.000	0.000	0.050	●	○	●
	1.00	0.00	0.00	4.2		5.0	R123U3-0100-0500-CS	7°	50.00	-0.100	0.000	0.000	0.050	●	○	●
	1.00	0.00	0.00	4.2		10.0	R123U3-0100-1000-CS	7°	50.00	-0.100	0.000	0.000	0.050	●	○	●
	1.50	0.00	0.00	6.3		5.0	R123U3-0150-0500-CS	7°	100.00	-0.100	0.000	0.000	0.050	●	○	●
	1.50	0.00	0.00	6.3		10.0	R123U3-0150-1000-CS	7°	100.00	-0.100	0.000	0.000	0.050	●	○	●
	1.50	0.00	0.00	6.3		15.0	R123U3-0150-1500-CS	7°	100.00	-0.100	0.000	0.000	0.050	●	○	●
	2.00	0.00	0.00	6.3		5.0	R123U3-0200-0500-CS	7°	100.00	-0.100	0.000	0.000	0.050	●	○	●
	2.00	0.00	0.00	6.3		10.0	R123U3-0200-1000-CS	7°	100.00	-0.100	0.000	0.000	0.050	●	○	●
	2.00	0.00	0.00	6.3		15.0	R123U3-0200-1500-CS	7°	100.00	-0.100	0.000	0.000	0.050	●	○	●

N123-CS/CM

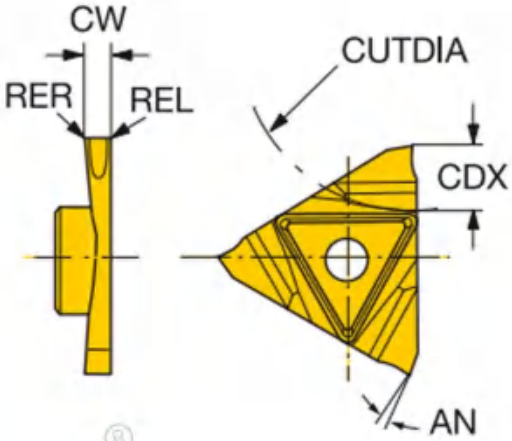

SSC	CW	REL	RER	CDX	订货号	AN	CUTDIA	CWTOLL	CWTOLU	RETOLL	RETOLU	YL10	YL740	YL930
						尺寸，mm								
T	1.00	0.00	0.00	4.3	N123T3-0100-0000-CS	7°	50.00	-0.050	0.030	0.000	0.050	●	○	●
	1.50	0.00	0.00	6.4	N123T3-0150-0000-CS	7°	100.00	-0.050	0.030	0.000	0.050	●	○	●
	2.00	0.00	0.00	6.4	N123T3-0200-0000-CS	7°	100.00	-0.050	0.030	0.000	0.050	●	○	●
U	1.00	0.00	0.00	4.3	N123U3-0100-0000-CS	7°	50.00	-0.050	0.030	0.000	0.050	●	○	●
	1.50	0.00	0.00	6.4	N123U3-0150-0000-CS	7°	100.00	-0.050	0.030	0.000	0.050	●	○	●
	2.00	0.00	0.00	6.4	N123U3-0200-0000-CS	7°	100.00	-0.050	0.030	0.000	0.050	●	○	●
T	1.00	0.10	0.10	4.3	N123T3-0100-0001-CM	7°	50.00	-0.030	0.030	-0.050	0.050	●	○	●
	1.50	0.10	0.10	6.4	N123T3-0150-0001-CM	7°	100.00	-0.030	0.030	-0.050	0.050	●	○	●
	2.00	0.10	0.10	6.4	N123T3-0200-0001-CM	7°	100.00	-0.030	0.030	-0.050	0.050	●	○	●
U	1.00	0.10	0.10	4.3	N123U3-0100-0001-CM	7°	50.00	-0.030	0.030	-0.050	0.050	●	○	●
	1.50	0.10	0.10	6.4	N123U3-0150-0001-CM	7°	100.00	-0.030	0.030	-0.050	0.050	●	○	●
	2.00	0.10	0.10	6.4	N123U3-0200-0001-CM	7°	100.00	-0.030	0.030	-0.050	0.050	●	○	●

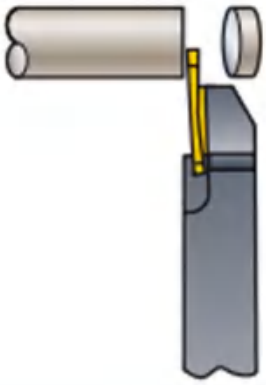

R/LF123刀杆

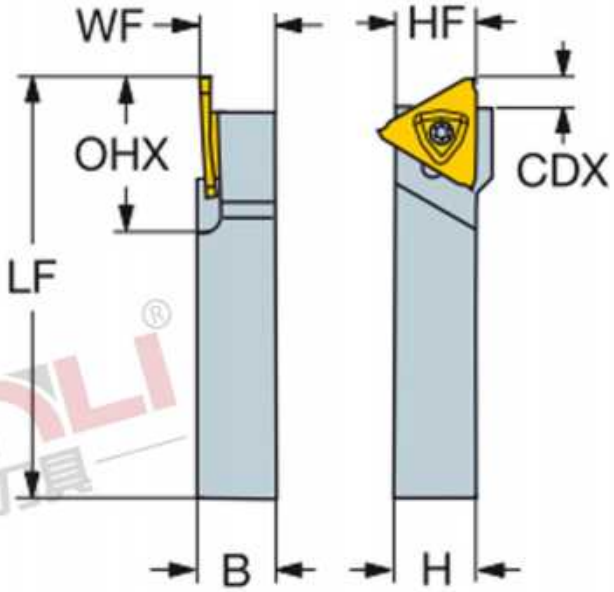

SSC	CZC$_{MS}$	CDX	OHX	订货号	尺寸，mm B	H	LF	WF	HF	NM	KG	MIID
T	20 x 20	6.4	23.0	RF123T06-2020BM	20.0	20.0	125.0	20.0	20.0	3.0	0.39	N123T3-0150- CM
	25 x 25	6.4	23.0	RF123T06-2525BM	25.0	25.0	150.0	25.0	25.0	3.0	0.71	N123T3-0150- CM
	32 x 32	6.4	23.0	RF123T06-3232BM	32.0	32.0	170.0	32.0	32.0	3.0	1.31	N123T3-0150- CM
U	20 x 20	6.4	23.0	LF123U06-2020BM	20.0	20.0	125.0	20.0	20.0	3.0	0.39	N123U3-0150- CM
	25 x 25	6.4	23.0	LF123U06-2525BM	25.0	25.0	150.0	25.0	25.0	3.0	0.71	N123U3-0150- CM
	32 x 32	6.4	23.0	LF123U06-3232BM	32.0	32.0	170.0	32.0	32.0	3.0	1.31	N123U3-0150- CM

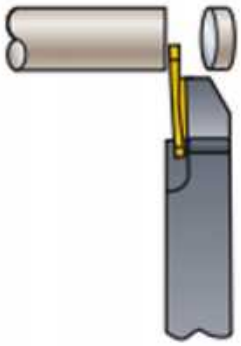

TGF32

形状 The basic shape of inserts		型号 Type		尺寸 Dimension (mm) W	B	r ε	材质 Grade recommended Uncoated grade YL10	PVC coating grade YL740	PVC coating grade YL930	Ceramic YL60
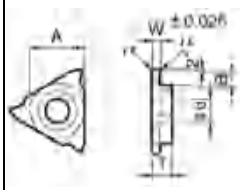		TGF32R/L	033-005	0.33	0.8	0.05	●		●	○
			040-005	0.40			●		●	○
			045-005	0.45			●		●	○
			050-005	0.50	1.2		●		●	○
			075-010	0.75	2		●		●	○
			095-010	0.95			●		●	○
			100-010	1.00			●		●	○
			110-010	1.10			●		●	○
			120-010	1.20			●		●	○
			125-010	1.25		0.2	●		●	○
			130-020	1.30			●		●	○
			140-010	1.40	2.5	0.2	●		●	○
			145-010	1.45			●		●	○
			150-010	1.50			●		●	○
			160-010	1.60			●		●	○
			170-010	1.70			●		●	○
			175-010	1.75			●		●	○
			200-010	2.00			●		●	○
			225-010	2.25			●		●	○
			250-010	2.50			●		●	○
			300-010	3.00			●		●	○

KTGFR/L

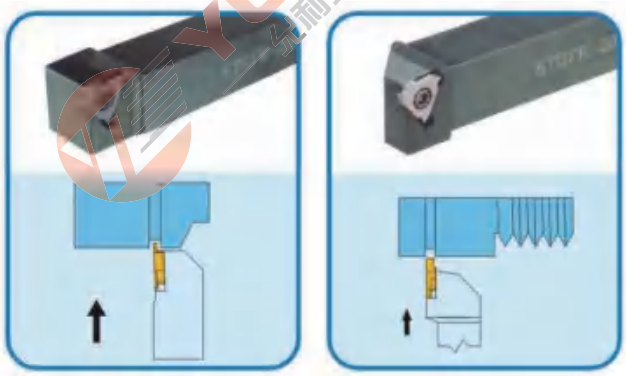

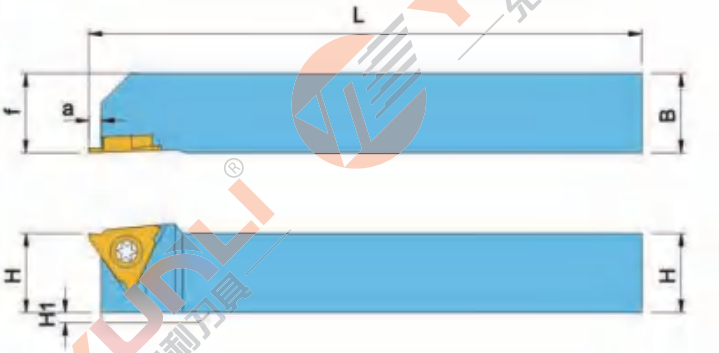

形状	型号	尺寸(mm) H1=h	H2	a	B	L	L2	F	刀片Insert	螺钉Screw	扳手Wrench	库存 R	L
	KTGFR /L 1010JX-16F	10	2	2.5	10	120	-	10	MTGF32R/L	MS4009A	ETF15	●	●
	KTGFR /L 1212JX-16F	12	-	2.5	12			12				●	●
	KTGFR /L 1616JX-16F	16	-	2.5	16			16		MS4011A		●	●
	KTGFR /L 1212F-16F	12	-	2.5	12	85		12				●	●
	KTGFR /L 1010F-16	10	4	2.5	10	80		12	TGF32R/L	MS4011A	ETF15	●	●
	KTGFR /L 1212H-16	12	2	2.5	12	100		16				●	●
	KTGFR /L 1616H-16	16	-	2.5	16	100		20				●	●
	KTGFR /L 2020K-16	20		2.5	20	125		25				●	●
	KTGFR /L 2525M 16	25		2.5	25	150		32				●	●

GBA43

形状	型号	尺寸 Dimension (mm)			材质 Grade recommended			
					Uncoated grade	PVC coating grade		Ceramic
有方向的刀片图示为右手方向（R）	Type	W	B	r ε	YL10	YL740	YL930	YL60
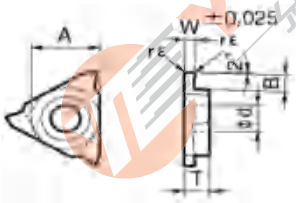 	GBA43R/L 050-005	0.50	1.0	0.05	●		●	○
	055-005	0.55			●		●	○
	060-005	0.60			●		●	○
	065-005	0.65			●		●	○
	070-005	0.70			●		●	○
	075-005	0.75			●		●	○
	080-005	0.80			●		●	○
	085-005	0.85			●		●	○
	090-005	0.90			●		●	○
	095-005	0.95			●		●	○
	100-010	1.00	2.0	0.10	●		●	○
	105-010	1.05			●		●	○
	110-010	1.10			●		●	○
	115-010	1.15			●		●	○
	120-010	1.20			●		●	○
	125-010	1.25			●		●	○
	130-010	1.30			●		●	○
	135-010	1.35			●		●	○
	140-020	1.40	3.5	0.2	●		●	○
	145-020	1.45			●		●	○
	150-020	1.50			●		●	○
	155-020	1.55			●		●	○
	160-020	1.60			●		●	○
	165-020	1.65			●		●	○
	170-020	1.70			●		●	○
	175-020	1.75			●		●	○
	180-020	1.80			●		●	○
	185-020	1.85			●		●	○
	190-020	1.9			●		●	○
	195-020	1.95			●		●	○
	200-020	2.00			●		●	○
	205-020	2.05			●		●	○
	210-020	2.10			●		●	○
	215-020	2.15			●		●	○
	220-020	2.20			●		●	○
	225-020	2.25			●		●	○
	230-020	2.30			●		●	○
	235-020	2.35			●		●	○
	240-020	2.40			●		●	○
	245-020	2.45			●		●	○
	250-030	2.50	4.0	0.3	●		●	○
	255-030	2.55			●		●	○
	260-030	2.60			●		●	○
	265-030	2.65			●		●	○
	270-030	2.7			●		●	○
	275-030	2.75			●		●	○
	280-030	2.80			●		●	○
	285-030	2.85			●		●	○
	290-030	2.90			●		●	○
	295-030	2.95			●		●	○
	300-030	3.00			●		●	○
	305-030	3.05			●		●	○
	310-030	3.10			●		●	○
	315-030	3.15			●		●	○
	320-030	3.20			●		●	○
	325-030	3.25			●		●	○
	330-030	3.30			●		●	○
	335-030	3.35			●		●	○
	340-030	3.40			●		●	○
	345-030	3.45			●		●	○

GBA43

形状	型号	尺寸 Dimension (mm)			材质 Grade recommended			
					Uncoated grade	PVC coating grade		Ceramic
有方向的刀片图示为右手方向（R）	Type	W	B	r ε	YL10	YL740	YL930	YL60
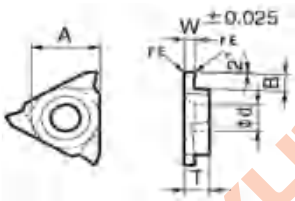 	GBA43R/L 350-030	3.50	5.0	0.3	●		●	○
	355-030	3.55			●		●	○
	360-030	3.60			●		●	○
	365-030	3.65			●		●	○
	370-030	3.70			●		●	○
	375-030	3.75			●		●	○
	380-030	3.80			●		●	○
	385-030	3.85			●		●	○
	390-030	3.90			●		●	○
	395-030	3.95			●		●	○
	400-040	4.00		0.4	●		●	○
	405-040	4.05						
	410-040	4.10			●		●	○
	415-040	4.15						
	420-040	4.20			●		●	○
	425-040	4.25						
	430-040	4.30			●		●	○
	435-040	4.35						
	440-040	4.40			●		●	○
	445-040	4.45						
	450-040	4.50			●		●	○
	455-040	4.55						
	460-040	4.60			●		●	○
	465-040	4.65						
	470-040	4.70			●		●	○
	475-040	4.75						
	480-040	4.80			●		●	○
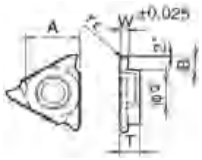 	GBA43R/L 100-050R	1.00	2.0	0.50	●		●	○
	150-075R	1.50	3.5	0.75	●		●	○
	200-100R	2.00		1.00	●		●	○
	250-125R	2.50	4.0	1.25	●		●	○
	300-150R	3.00		1.50	●		●	○
	350-175R	3.50	5.0	1.75	●		●	○
	400-200R	4.00		2.00	●		●	○

GB43

形状		型号		尺寸 Dimension (mm)			材质 Grade recommended			
							Uncoated grade	PVC coating grade		Ceramic
有方向的刀片图示为右手方向（R）		Type		W	B	r ε	YL10	YL740	YL930	YL60
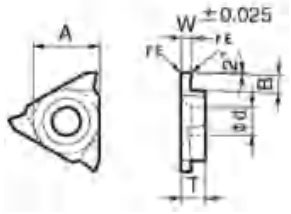	 	GB43R/L	125	1.25	2.0	0.2	●	●	●	○
			145	1.45	2.0	0.2	●	●	●	○
			150	1.50	3.5	0.2	●	●	●	○
			175	1.75	3.5	0.2	●	●	●	○
			185	1.85	3.5	0.2	●	●	●	○
			200	2.00	3.5	0.2	●	●	●	○
			230	2.30	3.5	0.2	●	●	●	○
			250	2.50	4.0	0.3	●	●	●	○
			265	2.65	4.0	0.3	●	●	●	○
			280	2.80	4.0	0.3	●	●	●	○
			300	3.00	4.0	0.3	●	●	●	○
			330	3.30	4.0	0.3	●	●	●	○
			350	3.50	5.0	0.3	●	●	●	○
			400	4.00	5.0	0.4	●	●	●	○
			430	4.30	5.0	0.4	●	●	●	○
			450	4.50	5.0	0.4	●	●	●	○
			480	4.80	5.0	0.4	●	●	●	○
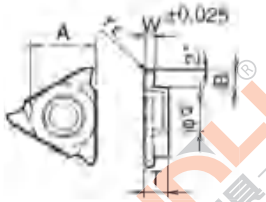		GB43R/L	050R	1.00	2.0	0.50	●		●	○
			075R	1.50	3.5	0.75	●		●	○
			100R	2.00	3.5	1.00	●		●	○
			125R	2.50	4.0	1.25	●		●	○
			150R	3.00	4.0	1.50	●		●	○
			200R	4.00	5.0	2.00	●		●	○

切槽刀片 GBA32

形状		型号		尺寸 Dimension (mm)			材质 Grade recommended			
							Uncoated grade	PVC coating grade		Ceramic
有方向的刀片图示为右手方向（R）		Type		W	B	r ε	YL10	YL740	YL930	YL60
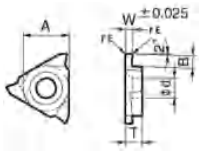	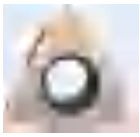 	GBA32R/L	033-005	0.33	0.8	0.05	●		●	○
			050-005	0.50	1.0		●		●	○
			050-005	0.50	1.2		●		●	○
			075-005	0.75	2.0		●		●	○
			095-005	0.95			●		●	○
			100-005	1.00			●		●	○
			110-005	1.10			●		●	○
			120-005	1.20			●		●	○
			125-020	1.25		0.20	●		●	○
			130-020	1.30			●		●	○
			140-020	1.40	2.5		●		●	○
			145-020	1.45			●		●	○
			150-020	1.50			●		●	○
			160-020	1.60			●		●	○
			170-020	1.70			●		●	○
			175-020	1.75			●		●	○
			200-020	2.00			●		●	○
			225-020	2.25			●		●	○
			250-020	2.50			●		●	○
			300-020	2.50			●		●	○
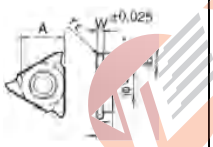		GBA32R/L	050-025R	0.50	1.2	0.25	●		●	○
			060-030R	0.60	2.0	0.30	●		●	○
			080-040R	0.80	2.0	0.40	●		●	○
			100-050R	1.00	2.0	1.50	●		●	○
			200-100R	2.00	2.5	1.00	●		●	○
			300-150R	3.00	2.5	1.50	●		●	○

KGB刀杆

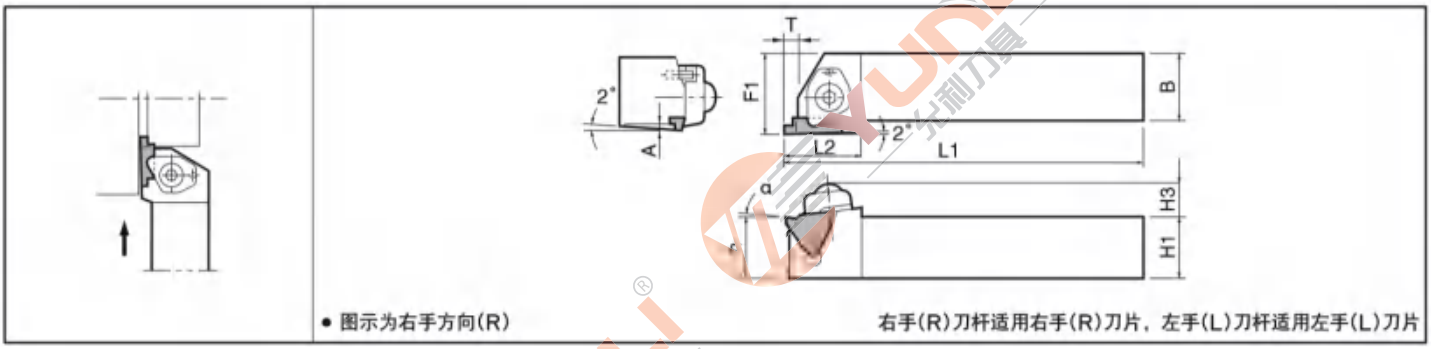

KGBS刀杆

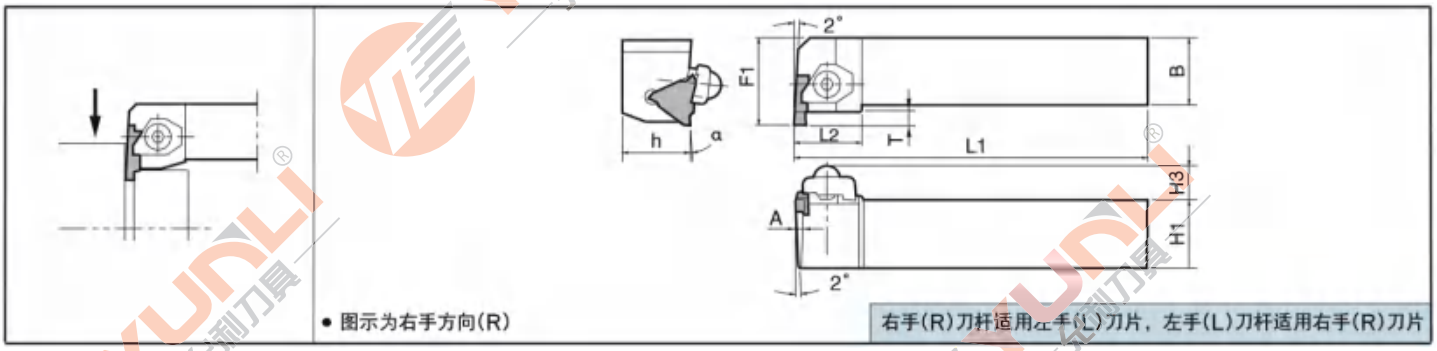

型状	型号	尺寸(mm)								库存	
		H1=h	H3	B	L1	L2	F1	A	T	R	L
	KGBR/L 2020K22-15	20	4.0	20	125	25.5	25	1.0	4.0	●	●
	KGBR/L 2525M22-15	25	4.0	25	150	25.5	30	1.0	4.0	●	●
	KGBR/L 2020K22-25	20	4.0	20	125	25.5	25	2.0	4.5	●	●
	KGBR/L 2525M22-25	25	4.0	25	150	25.5	30	2.0	4.5	●	●
	KGBR/L 2020K22-25T5	20	4.0	20	125	25.5	25	2.0	5.5	●	●
	KGBR/L 2525M22-25T5	25	4.0	25	150	25.5	30	2.0	5.5	●	●
	KGBR/L 2020K22-35	20	4.0	20	125	25.5	25	3.0	5.5	●	●
	KGBR/L 2525M22-35	25	4.0	25	150	25.5	30	3.0	5.5	●	●
	KGBR/L 2020H22-15	20	4.0	20	100	25.5	25	1.0	4.0	●	●
	KGBR/L 2020H22-25	20	4.0	20	100	25.5	25	2.0	4.5	●	●
	KGBR/L 2020H22-35	20	4.0	20	100	25.5	25	3.0	5.5	●	●
	KGBSR/L 2020K22-15	20	4.5	20	125	25	27	1.0	4.0	●	●
	KGBSR/L 2525M22-15	25	5.0	25	150	25	32	1.0	4.0	●	●
	KGBSR/L 2020K22-25	20	4.5	20	125	25	27	2.0	4.5	●	●
	KGBSR/L 252M22-25	25	5.0	25	150	25	32	2.0	4.5	●	●
	KGBSR/L 2020K22-25T5	20	4.5	20	125	25	27	2.0	5.5	●	●
	KGBSR/L 2525M22-25T5	25	5.0	25	150	25	32	2.0	5.5	●	●
	KGBSR/L 2020K22-35	20	4.5	20	125	25	27	3.0	5.5	●	●
	KGBSR/L 2525M22-35	25	5.0	25	150	25	32	3.0	5.5	●	●

KGBA刀杆

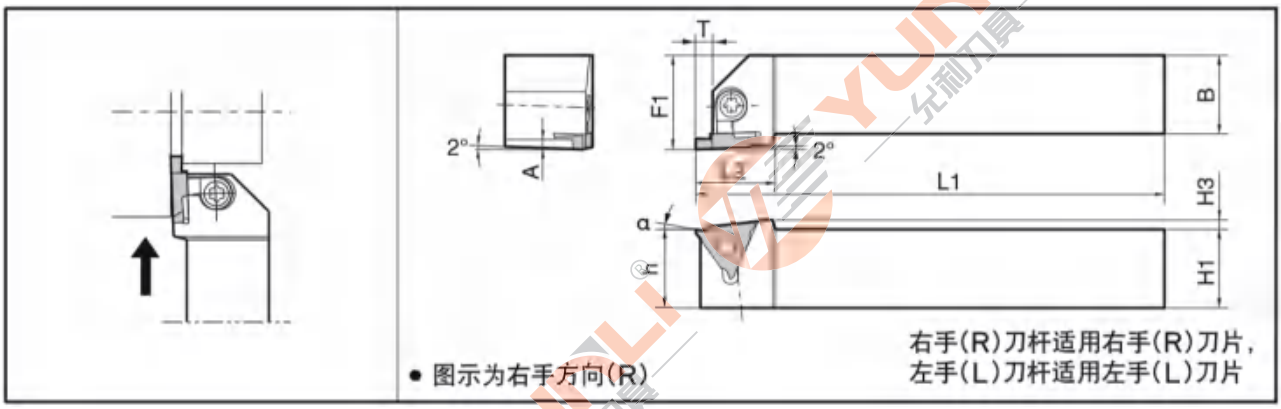

KGBAS刀杆

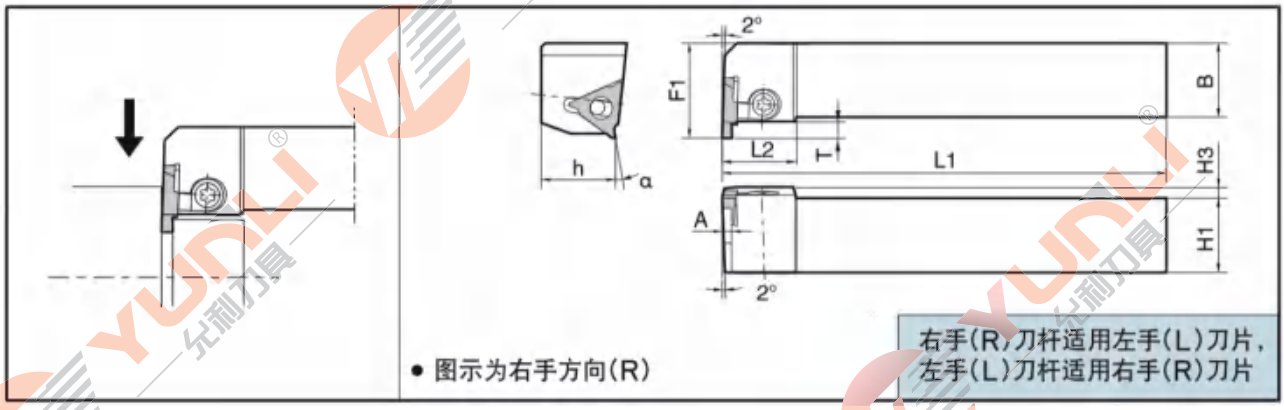

型状	型号	尺寸(mm)								库存	
		H1=h	H3	B	L1	L2	F1	A	T	R	L
	KGBAR/L 2020K22-15	20	4.0	20	125	25.5	25	1.0	4.0	●	●
	KGBAR/L 2525M22-15	25	4.0	25	150	25.5	30	1.0	4.0	●	●
	KGBAR/L 2020K22-25	20	4.0	20	125	25.5	25	2.0	4.5	●	●
	KGBAR/L 2525M22-25	25	4.0	25	150	25.5	30	2.0	4.5	●	●
	KGBAR/L 2020K22-25T5	20	4.0	20	125	25.5	25	2.0	5.5	●	●
	KGBAR/L 2525M22-25T5	25	4.0	25	150	25.5	30	2.0	5.5	●	●
	KGBAR/L 2020K22-35	20	4.0	20	125	25.5	25	3.0	5.5	●	●
	KGBAR/L 2525M22-35	25	4.0	25	150	25.5	30	3.0	5.5	●	●
	KGBAR/L 2020H22-15	20	4.0	20	100	25.5	25	1.0	4.0	●	●
	KGBAR/L 2020H22-25	20	4.0	20	100	25.5	25	2.0	4.5	●	●
	KGBAR/L 2020H22-35	20	4.0	20	100	25.5	25	3.0	5.5	●	●
	KGBASR/L 2020K22-15	20	4.5	20	125	25.0	27	1.0	4.0	●	●
	KGBASR/L 2525M22-15	25	5.0	25	150	25.0	32	1.0	4.0	●	●
	KGBASR/L 2020K22-25	20	4.5	20	125	25.0	27	2.0	4.5	●	●
	KGBASR/L 252M22-25	25	5.0	25	150	25.0	32	2.0	4.5	●	●
	KGBASR/L 2020K22-25T5	20	4.5	20	125	25.0	27	2.0	5.5	●	●
	KGBASR/L 2525M22-25T5	25	5.0	25	150	25.0	32	2.0	5.5	●	●
	KGBASR/L 2020K22-35	20	4.5	20	125	25.0	27	3.0	5.5	●	●
	KGBASR/L 2525M22-35	25	5.0	25	150	25.0	32	3.0	5.5	●	●

JTGR/L型 刀片

形状		型号	尺寸（mm）						材质		
有方向的刀片图示为右手方向（R）			W	A	B	r ε	Ød	T	YL10	YL930	YL740
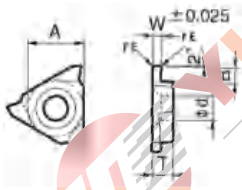		JTGR/L3033F	0.33	0.8	0.7	0.03	9.525	3.18	●		●
		JTGR/L3043F	0.43	1.2	1.1	0.03			●		●
		JTGR/L3050F	0.50	1.2	1.1	0.03			●		●
		JTGR/L3055F	0.55	1.2	1.1	0.03			●		●
		JTGR/L3060F	0.60	1.2	1.1	0.03			●		●
		JTGR/L3065F	0.65	2.0	1.9	0.03			●		●
		JTGR/L3070F	0.70	2.0	1.9	0.03			●		●
		JTGR/L3075F	0.75	2.0	1.9	0.03			●		●
		JTGR/L3080F	0.80	2.0	1.9	0.03			●		●
		JTGR/L3085F	0.85	2.0	1.9	0.03			●		●
		JTGR/L3090F	0.90	2.0	1.9	0.03			●		●
		JTGR/L3095F	0.95	2.0	1.9	0.03			●		●
		JTGR/L3100F	1.00	2.2	2.1	0.05			●		●
		JTGR/L3105F	1.00	2.2	2.1	0.05			●		●
		JTGR/L3110F	1.10	2.2	2.1	0.05			●		●
		JTGR/L3115F	1.15	2.2	2.1	0.05			●		●
		JTGR/L3120F	1.20	2.2	2.1	0.05			●		●
		JTGR/L3125F	1.25	2.2	2.1	0.05			●		●
		JTGR/L3130F	1.30	2.2	2.1	0.05			●		●
		JTGR/L3135F	1.35	2.2	2.1	0.05			●		●
		JTGR/L3140F	1.40	2.2	2.1	0.05			●		●
		JTGR/L3145F	1.45	2.2	2.1	0.05			●		●
		JTGR/L3150F	1.50	2.2	2.1	0.05			●		●
		JTGR/L3155F	1.55	2.2	2.1	0.05			●		●
		JTGR/L3160F	1.60	2.2	2.1	0.05			●		●
		JTGR/L3165F	1.65	2.2	2.1	0.05			●		●
		JTGR/L3170F	1.70	2.2	2.1	0.05			●		●
		JTGR/L3175F	1.75	2.2	2.1	0.05			●		●
		JTGR/L3180F	1.80	2.2	2.1	0.05			●		●
		JTGR/L3200F	2.00	2.7	2.6	0.05			●		●
		JTGR/L3225F	2.25	2.7	2.6	0.05			●		●
		JTGR/L3250F	2.50	2.7	2.6	0.05			●		●
		JTGR/L3275F	2.75	2.7	2.6	0.05			●		●
		JTGR/L3300F	3.00	2.7	2.6	0.05			●		●
		JTGR/L3033	0.33	0.8	0.7	0.03	9.525	3.18	●		●
		JTGR/L3050	0.50	1.2	1.1	0.03			●		●
		JTGR/L3075	0.75	2.0	1.9	0.03			●		●
		JTGR/L3095	0.95	2.0	1.9	0.03			●		●
		JTGR/L3100	1.00	2.2	2.1	0.05			●		●
		JTGR/L3125	1.25	2.2	2.1	0.05			●		●
		JTGR/L3145	1.45	2.2	2.1	0.05			●		●
		JTGR/L3150	1.50	2.2	2.1	0.05			●		●
		JTGR/L3175	1.75	2.2	2.1	0.05			●		●
		JTGR/L3200	2.00	2.7	2.6	0.05			●		●
		JTGR/L3250	2.50	2.7	2.6	0.05			●		●

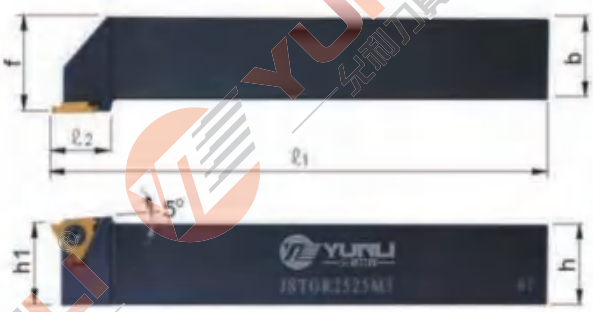

形状	型号	尺寸(mm)						库存		螺丝	板手
		H	b	L1	H1	L2	F	R	L		
	JSTGR/L 1010K3	10	10	125	10	18.5	10	●	●	CSTB-4S	T15
	JSTGR/L 1212K3	12	12	125	12	18.5	12	●	●		
	JSTGR/L 1616K3	16	16	125	16	18.5	16	●	●	CSTB-4	
	JSTGR/L 2020K3	20	20	125	12	18.5	12	●	●		
	JSTGR/L 2525M3	25	25	150	10	18.5	12	●	●		

SMGTR

形状	序号	型号	刃宽	切深	R角
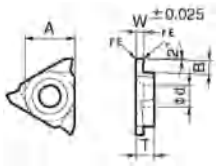 	1	SMGTR16X2050C	0.50	1.50	0.05
	2	SMGTR16X2060C	0.60	1.50	0.05
	3	SMGTR16X2070C	0.70	2.00	0.05
	4	SMGTR16X2075C	0.75	2.00	0.05
	5	SMGTR16X2080C	0.80	2.00	0.1
	6	SMGTR16X2090C	0.90	2.00	0.1
	7	SMGTR16X2095C	0.95	2.00	0.1
	8	SMGTR16X2100C	1.00	2.50	0.1
	9	SMGTR16X2110C	1.10	2.50	0.1
	10	SMGTR16X2120C	1.20	2.50	0.1
	11	SMGTR16X2130C	1.30	2.50	0.1

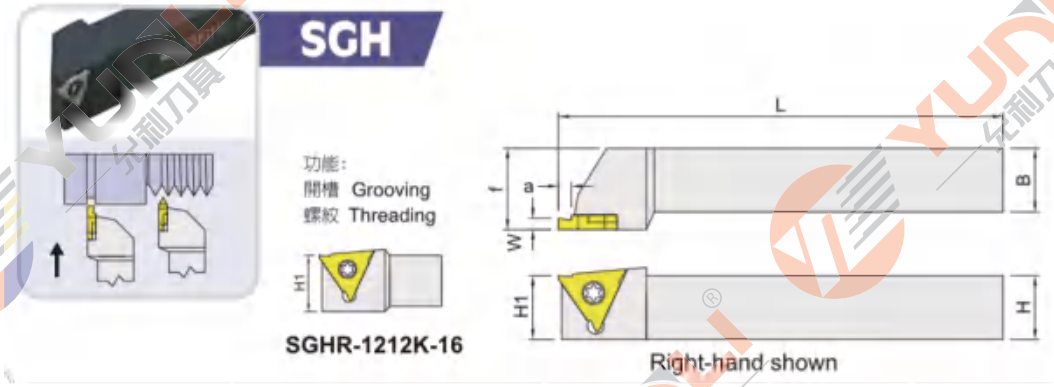

型号	尺寸					开槽刀片	车牙刀片	螺钉	扳手
	H	B	L	H1	f				
SGHR-1212K-16	12	12	125	12	16	SMGTR 16X2...	SMTTR160360..	MS4008C	ETF10
SGHR-1616K-16	16	16	125	16	20				
SGHR-2020K-16	20	20	125	20	25				
SGHR-2525M-16	25	25	150	25	32				
SGH2R-1212K-16	12	12	125	12	12	SMGTR 16X2...	SMTTR160360..	MS4008C	ETF10
SGH2R-1616K-16	16	16	125	16	16				
SGH2R-2020K-16	20	20	125	20	20				

GTMH32E

形状	型号	有效加工深度	尺寸（mm）			库存	
			W	L	r ε	R	L
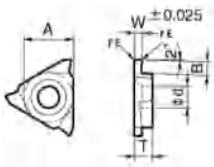 	GTMH32033R/LE	0.3	0.33	0.6	0.03	●	●
	GTMH32043R/LE	0.9	0.43	1.2	0.05	●	●
	GTMH32053R/LE		0.53			●	●
	GTMH32075R/LE	1.6	0.75	2.0		●	●
	GTMH32095R/LE		0.95			●	●
	GTMH32100R/LE		1.00			●	●
	GTMH32120R/LE		1.20			●	●
	GTMH32140R/LE		1.40			●	●
	GTMH32150R/LE	2.7	1.50	3.0		●	●
	GTMH32180R/LE		1.80			●	●
	GTMH32200R/LE		2.00			●	●
	GTMH32225R/LE		2.25			●	●
	GTMH32250R/LE		2.50			●	●
	GTMH32275R/LE		2.75			●	●
	GTMH32300R/LE		3.00			●	●
	GTMH32100R/LE01	1.6	1.00	2.0	0.1	●	●
	GTMH32120R/LE01		1.20			●	●
	GTMH32150R/LE01	2.7	1.50	3.0		●	●
	GTMH32200R/LE01		2.00			●	●
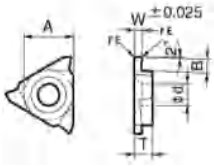 	GTMH32030R/L U	0.3	0.30	0.6	0.03	●	●
	GTMH32050R/L U	0.9	0.50	12.0	0.05	●	●
	GTMH32075R/L U	1.6	0.75	2.0		●	●
	GTMH32095R/L U		0.95			●	●
	GTMH32100R/L U		1.00			●	●
	GTMH32103R/L U		1.03			●	●
	GTMH32125R/L U		1.25			●	●
	GTMH32145R/L U	2.7	1.45	3.0		●	●
	GTMH32150R/L U		1.50			●	●
	GTMH32175R/L U		1.75			●	●
	GTMH32200R/L U		2.00			●	●
	GTMH32250R/L U		2.50			●	●

GTMX32T

形状 有方向的刀片图示为右手方向（R）	型号	有效加工深度	尺寸（mm）			库存	
			w	L	r ε	R	L
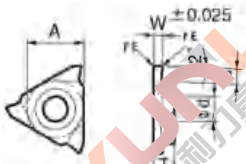	GTMX32030R/LT	0.25	0.30	0.60	0.05	●	●
	GTMX32033R/LT	0.90	0.33	1.20		●	●
	GTMX32043R/LT		0.43			●	●
	GTMX32050R/LT		0.50			●	●
	GTMX32053R/LT		0.53			●	●
	GTMX32065R/LT		0.65			●	●
	GTMX32075R/LT		0.75			●	●
	GTMX32080R/LT	1.60	0.80	2.00		●	●
	GTMX32095R/LT		0.95			●	●
	GTMX32100R/LT		1.00			●	●
	GTMX32110R/LT		1.10			●	●
	GTMX32120R/LT		1.20			●	●
	GTMX32125R/LT		1.25			●	●
	GTMX32130R/LT		1.30			●	●
	GTMX32140R/LT		1.40			●	●
	GTMX32145R/LT	2.70	1.45	3.00		●	●
	GTMX32150R/LT		1.50			●	●
	GTMX32160R/LT		1.60			●	●
	GTMX32175R/LT		1.75			●	●
	GTMX32180R/LT		1.80			●	●
	GTMX32200R/LT		2.00			●	●
	GTMX32250R/LT		2.50			●	●
	GTMX32300R/LT		3.00			●	●
	GTMX32100R/LT01	1.60	1.00	2.00	0.1	●	●
	GTMX32120R/LT01		1.20			●	●
	GTMX32150R/LT01	2.70	1.50	3.00		●	●
	GTMX32200R/LT01		2.00			●	●
	GTMX32250R/LT01		2.50			●	●
	GTMX32150R/LT02		1.50		0.2	●	●
	GTMX32200R/LT02		2.00			●	●
	GTMX32250R/LT02		1.50			●	●
	GTMX32300R/LT02		3.00			●	●

GTMH32VT

形状 有方向的刀片图示为右手方向（R）	型号	有效加工深度	尺寸（mm）			库存	
			w	L	r ε	R	L
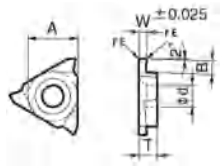	GTMH32033 R/L VT	0.25	0.33	0.6	0	●	●
	GTMH32043 R/L VT	0.90	0.43	1.2		●	●
	GTMH32053 R/L VT	1.60	0.53	2.0		●	●
	GTMH32065 R/L VT		0.65			●	●
	GTMH32075 R/L VT		0.75			●	●
	GTMH32080 R/L VT		0.80			●	●
	GTMH32085 R/L VT		0.85			●	●
	GTMH32095 R/L VT		0.95			●	●
	GTMH32100 R/L VT		1.00			●	●
	GTMH32110 R/L VT		1.10			●	●
	GTMH32120 R/L VT		1.20			●	●
	GTMH32130 R/L VT		1.30			●	●
	GTMH32140 R/L VT		1.40			●	●
	GTMH32150 R/L VT	2.70	1.50	3.0		●	●
	GTMH32200 R/L VT		2.00			●	●

GTMH32E

形状 有方向的刀片图示为右手方向（R）	型号	有效加工深度	尺寸（mm）			库存	
			w	L	r ε	R	L
	GTMH32050 R/L E025	0.90	0.50	1.2	0.25	●	●
	GTMH32070 R/L E035	1.60	0.70	2.0	0.35	●	●
	GTMH32100 R/L E05		1.00		0.50	●	●
	GTMH32200 R/L E10	2.70	2.00	3.0	1.00	●	●
	GTMH32300 R/L E15		2.00		1.50	●	●

GTMH32SSH

形状 有方向的刀片图示为右手方向（R）	型号	有效加工深度	尺寸（mm）			库存	
			w	L	r ε	R	L
	GTMH32100 R/L SSH	1.60	1.00	2.0	0.5	●	●
	GTMH32150 R/L SSH	2.70	1.50			●	●
	GTMH32200 R/L SSH		2.00	3.0		●	●

GTMH32J

形状 有方向的刀片图示为右手方向（R）	型号	有效加工深度	尺寸（mm）			库存	
			w	L	r ε	R	L
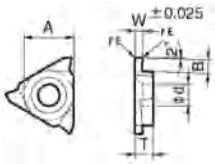	GTMH32075 R/L J005	1.60	0.75	2.0	0.05	●	●
	GTMH32080 R/L J005		0.80			●	●
	GTMH32095 R/L J005		0.95			●	●
	GTMH32100 R/L J005		1.00			●	●
	GTMH32115 R/L J005		1.15			●	●
	GTMH32120 R/L J01		1.20		0.1	●	●
	GTMH32125 R/L J01		1.25			●	●
	GTMH32145 R/L J01	2.7	1.45	3		●	●
	GTMH32150 R/L J01		1.50			●	●
	GTMH32160 R/L J01		1.60			●	●
	GTMH32175 R/L J01		1.75			●	●
	GTMH32180 R/L J01		1.80			●	●
	GTMH32200 R/L J01		2.00			●	●
	GTMH32250 R/L J01		2.50			●	●
	GTMH32150 R/L J		1.50		0.2	●	●
	GTMH32200 R/L J		2.00			●	●
	GTMH32250 R/L J		2.50			●	●
	GTMH32300 R/L J		3.00			●	●

GTM32

有方向的刀片图示为右手方向（R） 形状	型号	有效加工深度	尺寸（mm）			库存	
			w	L	r ε	R	L
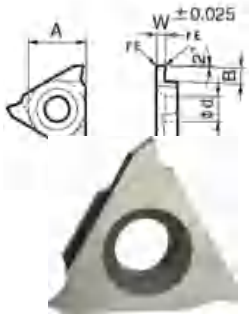	GTM32100 R/L 01	1.60	1.00	2.0	0.1	●	●
	GTM32100 R/L		1.00		0.2	●	●
	GTM32145 R/L	2.7	1.45	3.0	0.2	●	●
	GTM32150 R/L		1.50			●	●
	GTM32200 R/L		2.00			●	●
	GTM32230 R/L		2.30			●	●
	GTM32250 R/L		2.50			●	●
	GTM32300 R/L		3.00			●	●

GTMX32SS

形状 有方向的刀片图示为右手方向（R）	型号	有效加工深度	尺寸（mm）			库存	
			w	L	r ε	R	L
	GTMX32100 R/L SS	1.60	1.00	2.0	0.5	●	●
	GTMX32150 R/L SS	2.70	1.50			●	●
	GTMX32200 R/L SS		2.00	3.0		●	●
	GTMX32100 R/L LS	1.60	1.00	2.0	0.5	●	●
	GTMX32150 R/L LS	2.70	1.50			●	●
	GTMX32200 R/L LS		2.00	3.0		●	●

GTMX32V

形状 有方向的刀片图示为右手方向（R）	型号	有效加工深度	尺寸（mm）			库存	
			角度	L	r ε	R	L
	GTMX32V90R005	0.50	90 °	-	0.5	●	●
	GTMX32V90R010	0.70	90 °			●	●

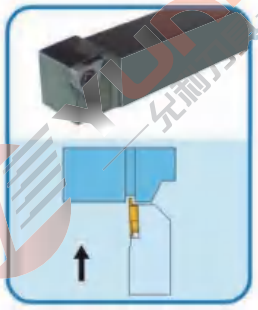

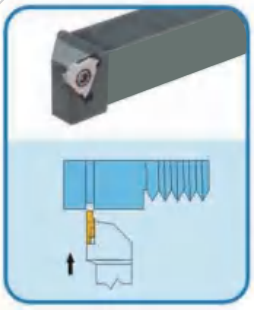

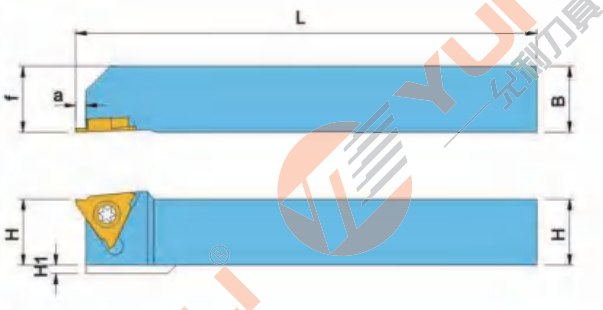

形状	刀柄型号	尺寸（mm）							槽宽尺寸（mm）W	适用刀片	零部件					库存	
		h	b	L1	h1	f	L2	ar			金属压片	扭矩螺丝	弹簧	紧固螺丝	扳手	R	L
	NGTNR/L161632-00	16	16	78	16	16	20	1.6	0.30～3.00	GTM32	CPR/L5S	AOS-5*20	ASG-5	—	LW-2.5(A)	●	●
	NGTNR/L161632-15							2.7	1.45～3.00	GTMH32						●	●
	NGTNR/L161632-25								2.50～3.00	GTMX32						●	●
	NGTBR/L202032-00S	20	20	125	20	25	25	1.6	0.30～3.00	GTM32	CPR/L5	AOS-5*25	ASG-5	—	LW-2.5S(A)	●	●
	NGTBR/L202032-15S							2.7	1.45～3.00	GTMH32						●	●
	NGTBR/L202032-25S								2.50～3.00	GTMX32						●	●
	NGTBR/L252532-00S	25	25	150	25	30	25	1.6	0.30～3.00	GTM32	CPR/L5	AOS-5*25	ASG-5	—	LW-2.5S(A)	●	●
	NGTBR/L252532-15S							2.7	1.45～3.00	GTMH32						●	●
	NGTBR/L252532-25S								2.50～3.00	GTMX32						●	●
	NGTAR/L202032-00S	20	20	125	20	25	-	1.6	0.30～3.00	GTM32 GTMH32	CPR/L5※	AOS-5*25	ASG-5	—	LW-2.5(A)	●	●
	NGTAR/L202032-15S							2.7	1.45～3.00	GTMX32						●	●
	Y-GTTR/L10S	10	10	120	-	0	20	-	0.30～3.00	GTM32 GTMH32 GTMX32 TBMH32	—	—	—	LR-S-4*10PW	CLR-15S(B)	●	●
	Y-GTTR/L10						25									●	●
	Y-GTTR/L10L						30									●	●
	Y-GTTR/L12S	12	12				20									●	●
	Y-GTTR/L12						25									●	●
	Y-GTTR/L12L						30									●	●
	Y-GTTR/L12SOH	12	12	70	-	0	20	1.6	0.30～3.00		—	—	—	LR-S-4*10PW	CLR-15S(B)	●	●

GMG

形状 有方向的刀片图示为右手方向（R）	型号	尺寸（mm）						材质		
		W	r ε	M	L	H	θ	YL10	YL930	YL740
	GMG4020-020MS	4.0	0.2	3.3	20	4.3	–	●	●	●
	GMG4020-040MS	4.0	0.4	3.3	20	4.3		●	●	●
	GMG4020-080MS	4.0	0.8	3.3	20	4.3		●	●	●
	GMG3020-150R	3.0	1.5	2.3	20	4.3		●	●	●
	GMG4020-200R	4.0	2.0	3.3	20	4.3		●	●	●
	GMG5020-250R	5.0	2.5	4.2	20	4.3		●	●	●
	GMG6020-300R	6.0	3.0	5.2	20	4.3		●	●	●
	GMG4020-200RU	4.0	2.0	3.3	20	4.3		●	●	●
	GMG4020-200R	4.0	2.0	3.3	20	4.3		●	●	●
	GMG4020-040MG	4.0	0.4	3.3	20	4.3		●	●	●
	FGGR/L4020-04	4.0	0.4	3.3	20	4.3		●	●	●

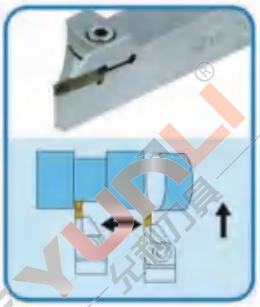

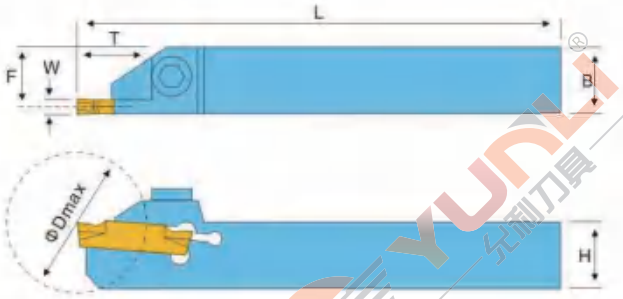

形状	型号		尺寸(mm)									刃宽 W（mm）		零件				库存	
			H1=h	H2	H3	B	L1	L2	F1	A	T	MIN.	MAX.	紧固螺钉		扳手		R	L
	KGMR/L	2012K-2T17	20	–	7	12	125	33	11.15	1.7	17	2.0	3.0	SB-5TR	–	LTW-20	–	●	●
		2020K-2T17	20			20			19.15					–	HH5X16	–	LW-4	●	●
		2525M-2T17	25	–		25	150		24.15						HH5X25			●	●
	KGMR/L	1616H-3T20	16	4	7	16	100	36	14.8	2.4	20	3.0	4.0	–	HH5X16			●	●
		2012K-3T20	20	–		12	125		10.8					SB-5TR		LTW-20	–	●	●
		2020K-3T20	20			20	125		18.8					–	HH5X16	–	LW-4	●	●
		2525M-3T20	25			25	150		23.8						HH5X25			●	●
	KGMR/L	2020K-4T20	20	–	7.5	20	125	36	18.3	3.4	20	4.0	5.0	–	HH5X16	–	LW-4	●	●
		2525M-4T20	25			25	150		23.3						HH5X25			●	●
		2525M-4T25	25	–		25	150	41	23.3		25				HH5X25			●	●
	KGMR/L	2525M-5T25	25	–	8.5	25	150	42	22.8	4.4	25	5.0	6.0	–	HH5X25	–	LW-4	●	●
		3232P-5T25	32	–		32	170		29.8						HH5X25			●	●
	KGMR/L	2525M-6T30	25	–	9.5	25	150	45	22.4	5.2	30	6.0	6.0	–	HH5X25	–		●	●

MGTR

形状	序号	型号	刃宽	切深	R角	适配刀杆型号
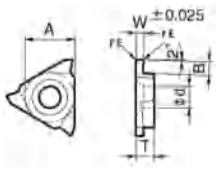 	1	MGTR/L33100	1.00	1.20	0.2	MGHR/L2020K3315
	2	MGTR/L33125	1.25	1.20	0.2	
	3	MGTR/L33145	1.45	1.50	0.2	
	4	MGTR/L33150	1.50	3.00	0.2	
	5	MGTR/L33175	1.75	3.00	0.2	
	6	MGTR/L33200	2.00	3.00	0.2	
	7	MGTR/L33230	2.30	3.00	0.2	
	8	MGTR/L33250	2.50	3.00	0.3	MGHR/L2020K3323
	9	MGTR/L33270	2.70	3.00	0.3	
	10	MGTR/L33280	2.80	3.00	0.3	
	11	MGTR/L33300	3.00	3.00	0.3	
	12	MGTR/L33320	3.20	3.00	0.3	
	13	MGTR/L33330	3.30	3.00	0.3	
	14	MGTR/L33350	3.50	3.00	0.3	MGHR/L2020K3333
	15	MGTR/L33400	4.00	3.00	0.3	
	16	MGTR/L33430	4.30	3.00	0.3	
	17	MGTR/L33450	4.50	3.00	0.3	
	18	MGTR/L33470	4.70	3.00	0.3	
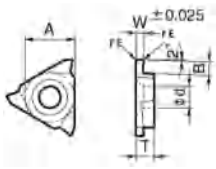 	1	MGTR/L43100	1.00	1.20	0.2	MGHR/L2020K4315
	2	MGTR/L43125	1.25	1.20	0.2	
	3	MGTR/L43145	1.45	1.50	0.2	
	4	MGTR/L43150	1.50	3.00	0.2	
	5	MGTR/L43175	1.75	3.00	0.2	
	6	MGTR/L43200	2.00	3.00	0.2	
	7	MGTR/L43230	2.30	3.00	0.2	
	8	MGTR/L43250	2.50	4.50	0.3	MGHR/L2020K4323
	9	MGTR/L43270	2.70	4.50	0.3	
	10	MGTR/L43280	2.80	4.50	0.3	
	11	MGTR/L43300	3.00	4.50	0.3	
	12	MGTR/L43320	3.20	4.50	0.3	
	13	MGTR/L43330	3.30	4.50	0.3	
	14	MGTR/L43350	3.50	4.50	0.3	MGHR/L2020K4333
	15	MGTR/L43400	4.00	4.50	0.3	
	16	MGTR/L43420	4.00	4.50	0.4	
	17	MGTR/L43430	4.30	4.50	0.4	
	18	MGTR/L43450	4.50	4.50	0.4	
	19	MGTR/L43470	4.70	4.50	0.4	

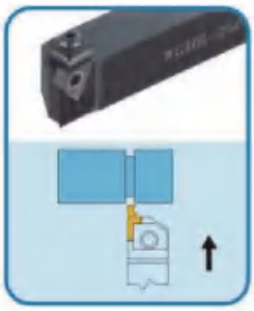

WGH

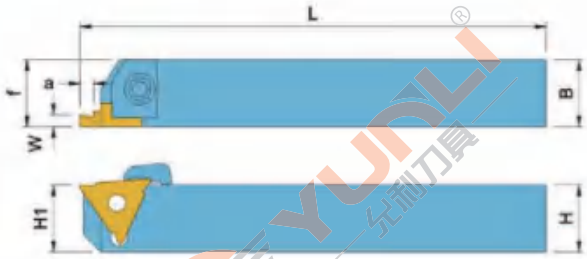

形状	型号	尺寸（mm）							刀片	
		H	B	L	H1	f	a	w		
	WGHR/L-2020K-3315	20	20	125	20	20	3	1.5-2.3	MGTR/L	33150-33470
	WGHR/L-2020K-3323							2.3-3.3		
	WGHL-2020K-3333							3.3-4.7		
	WGHL-2525M-3315	25	25	150	25	25	3	1.5-2.3		
	WGHL-2525M-3323							2.3-3.3		
	WGHL-2525M-3333							3.3-4.7		
	WGHR/L-1616K-4315	16	16	125	16	16	3	1.5-2.3	MGTR/L	43150-43470
	WGHR/L-1616K-4323						4.5	2.3-3.3		
	WGHR/L-2020K-4315	20	20	125	20	20	3	1.5-2.3		
	WGHR/L-2020K-4323						4.5	2.3-3.3		
	WGHR/L-2020K-4333							3.3-4.7		
	WGHR/L-2525M-4315	25	25	150	25	25	3	1.5-2.3		
	WGHR/L-2525M-4323						4.5	2.3-3.3		

WG1

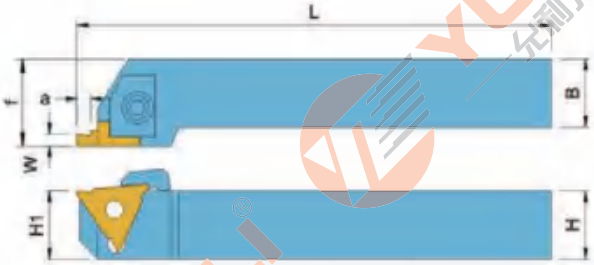

形状	型号	尺寸（mm）							刀片	
		H	B	L	H1	f	a	w		
	WG1R-1616-3315	16	16	125	16	20	3	1.5-2.3	MGTR	33150-33470
	WG1R-1616K-3323						3	2.3-3.3		
	WG1R-1616K-3333						3	3.3-4.7		
	WG1R-2020K-3315	20	20	125	20	25	3	1.5-2.3		
	WG1R-2020K-3323						3	2.3-3.3		
	WG1R-2020K-3333						3	3.3-4.7		
	WG1R-2525M-3315	25	25	150	25	32	3	1.5-2.3		
	WG1R-2525M-3323						3	2.3-3.3		
	WG1R-2525M-3333						3	3.3-4.7		
	WG1R/L-1616K-4315	16	16	125	16	20	3	1.5-2.3	MGTR/L	43150-43470
	WG1R/L-1616K-4323						4.5	2.3-3.3		
	WG1R/L-1616K-4333						4.5	3.3-4.7		
	WG1R/L-2020K-4315	20	20	125	20	25	3	1.5-2.3		
	WG1R/L-2020K-4323						4.5	2.3-3.3		
	WG1R/L-2020K-4333						4.5	3.3-4.7		
	WG1R/L-2525M-4315	25	25	150	25	32	3	1.5-2.3		
	WG1R/L 2525M-4323						4.5	2.3-3.3		
	WG1R/L-2525M-4333						4.5	3.3-4.7		

GIP/GIPA

形状 有方向的刀片图示为右手方向（R）	型号	规格尺寸（mm）			库存		
		W	R	M	IC20	ID5	IC808
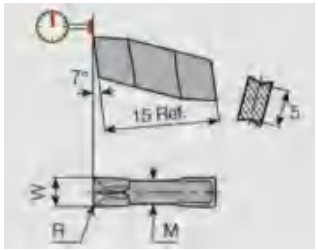	GIPA3.00-0.20	3.00	0.20	2.4	●	●	●
	GIPA4.00-0.40	4.00	0.40	3.2	●	●	●
	GIPA5.00-0.40	5.00	0.40	4.0	●	●	●
	GIPA3.00-1.50	3.00	1.50	2.4	●	●	●
	GIPA4.00-2.00	4.00	2.00	3.2	●	●	●
	GIPA5.00-2.5	5.00	2.50	3.9	●	●	●

GHD

GIHG

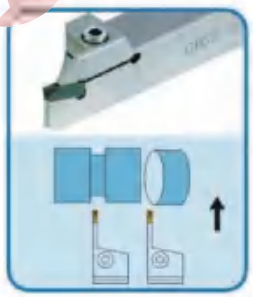

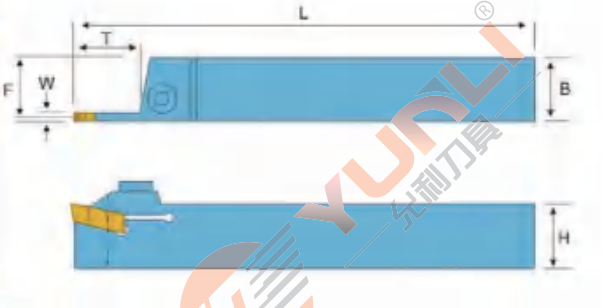

形状	型号	尺寸					宽度	刀片
		H	B	L	F	T		
	GHDR-2020K-3-10L	20	20	125	18.8	10	2.8-4	GIP.. GIF.. GIMF.. GIMY..
	GHDR-2525M-3-10L	25	25	150	23.8	10		
	GHDR-2020K-4-10L	20	20	125	18.4	10	4.0-5.0	
	GHDR-2525M-4-10L	25	25	150	23.4	10		
	GHDR-2020K-5-10L	20	20	125	17.9	12	5.0-6.4	
	GHDR-2525M-5-10L	25	25	150	22.9	12		
	GHGR-2020K-2-20L	20	20	125	19.2	20	2.2-2.4	GIP.. GIF.. GIMF.. GIMY..
	GHGR-2525M-2-20L	25	25	150	24.2	20		
	GHGR-2020K-3-20L	20	20	125	18.7	20	3.0-4.0	
	GHGR-2525M-3-20L	25	25	150	23.7	20		
	GHGR-2020K-4-20L	20	20	125	18.2	20	4.0-5.0	
	GHGR-2525M-4-20L	25	25	150	23.2	20		
	GHGR-2020K-2-25L	20	20	125	18.2	20	4.0-5.0	
	GHGR-2525M-2-25L	25	25	150	23.2	25		

JVGR/L刀片

形状	型号	尺寸（mm）						材质		
有方向的刀片图示为右手方向（R）		Ød	T	+0.05 / 0 / W	G	最大槽深	r ε	YL10	YL930	YL740
	JVGR/L033F	7.9	3.2	0.33	0.8	0.7	0	●	○	●
	JVGR/L050F			0.50	1.2	1.1	0	●	○	●
	JVGR/L075F			0.75	2.0	1.9	0	●	○	●
	JVGR/L095F			0.95		1.9	0	●	○	●
	JVGR/L100F			1.00	6.0	5.5	0	●	○	●
	JVGR/L125F			1.25	5.5	5.0	0	●	○	●
	JVGR/L150F			1.50	6.0	5.5	0	●	○	●
	JVGR/L200F			2.00	6.0	5.5	0	●	○	●

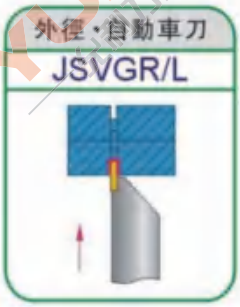

形状	型号	使用刀片	尺寸(mm)							紧固螺钉	扳手		库存	
			h	b	L1	L2	h1	f	C				R	L
	JSVGR/L1010K-C	JVGR/L□□F	10	10	125	23	10	10	-	CSTB-3SD	T-9F	(T-9L)	●	●
	JSVGR/L1212K-C		12	12	125	23	12	12					●	●
	JSVGR/L1616K		16	16	125	23	16	16					●	●

HELIR/L切断切槽刀杆

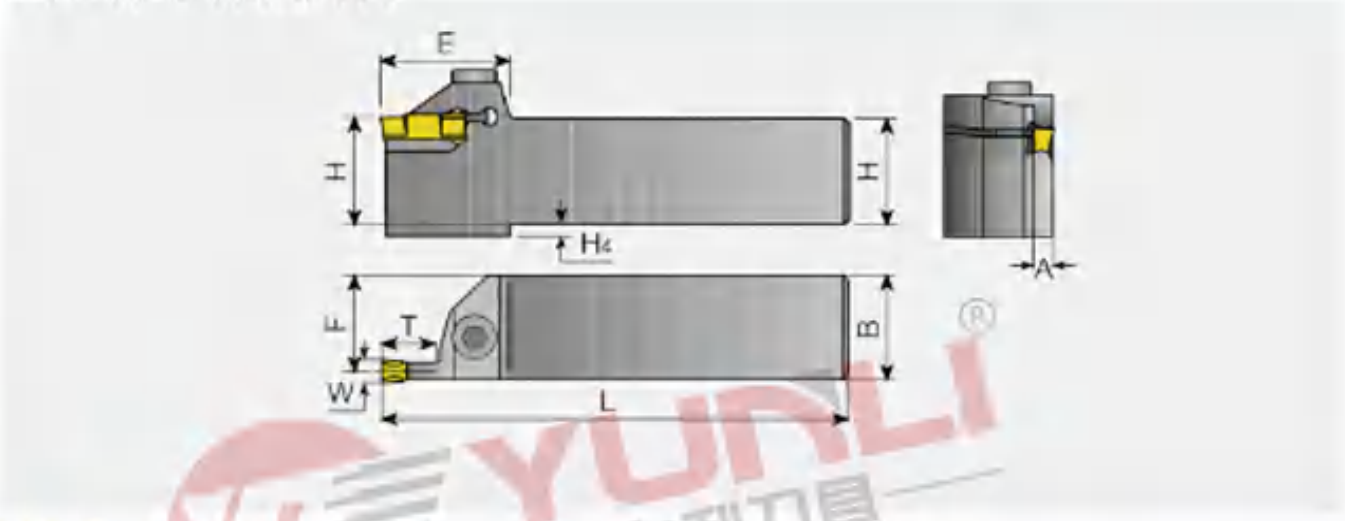

HELIR/L 外圆切削刀杆

W	Tmax	规格	HxB	L	F	A	E	H4
3	12	HELIR/L-1212-3T12	12x12	135	10.0	2.4	30.0	3
	12	HELIR/L-1616-3T12	16x16	135	14.8	2.4	30.0	
	20	HELIR/L-1616-3T20	16x16	140	14.8	2.4	36.4	
	12	HELIR/L-2020-3T12	20x20	135	18.8	2.4	29.0	
	20	HELIR/L-2020-3T20	20x20	140	18.8	2.4	36.4	
	12	HELIR/L-2525-3T12	25x25	135	23.8	2.4	29.0	
	20	HELIR/L-2525-3T20	25x25	140	23.8	2.4	36.4	
4	12	HELIR/L-1616-4T12	16x16	135	14.4	3.2	29.0	4
	20	HELIR/L-1616-4T20	16x16	140	14.4	3.2	38.0	4
	12	HELIR/L-2020-4T12	20x20	135	18.4	3.2	29.0	
	25	HELIR/L-2020-4T25	20x20	140	18.4	3.2	42.0	
	12	HELIR/L-2525-4T12	25x25	135	23.4	3.2	29.0	
	25	HELIR/L-2525-4T25	25x25	140	23.4	3.2	42.0	
5	12	HELIR/L-2020-5T12	20x20	135	17.9	4.2	29.0	
	25	HELIR/L-2020-5T25	20x20	140	17.9	4.2	42.0	
	12	HELIR/L-2525-5T12	25x25	135	22.9	4.2	29.0	
	25	HELIR/L-2525-5T25	25x25	140	22.9	4.2	42.0	
6	12	HELIR/L-2525-6T12	25x25	135	22.4	5.2	29.0	
	30	HELIR/L-2525-6T30	25x25	140	22.4	5.2	51.4	

外径深槽加工刀杆[GH / GHU / GA刀片用]

KGH

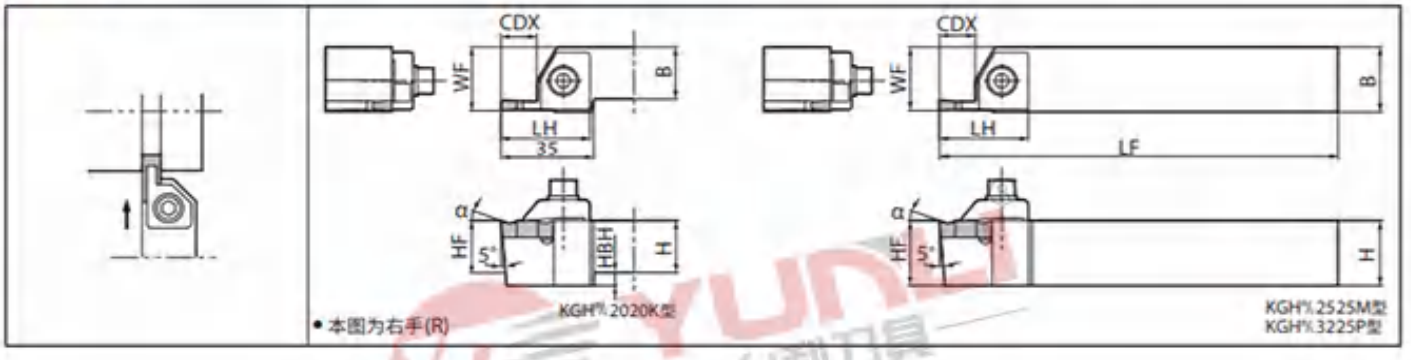

型 号		尺 寸(mm)								零件	
										紧固螺钉	扳手
		H	HF	HBH	B	LF	LH	WF	CDX		
KGH%	2020K-4	20	20	5	20	125	33.5	24.5-24.8	13	HH6X25	LW-5
	2525M-4	25	25	-	25	150		24.5-24.8			
	2020K-5	20	20	5	20	125	33.5	25.0-25.8	13		
	2525M-5	25	25	-	25	150		25.0-25.8			
	3225P-5	32	32	-	25	170		25.0-25.8			
	2020K-7	20	20	7	20	125	33.5	24.5-25.0	13		
	2525M-7	25	25	-	25	150		24.5-25.0			
	2525M-10	25	25	-	25	150	41	25.5-26.5	17		
	3225P-10	32	32	-	25	170		25.5-26.5			

KIGHR内槽刀杆

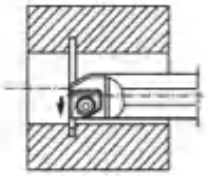

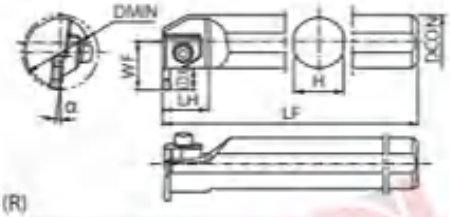

• 本图为右手(R)

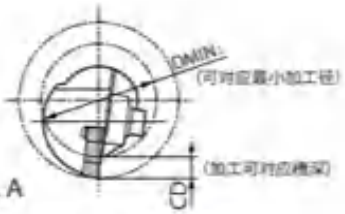

Fig. A

型 号		最小加工径	尺 寸(mm)									压板	紧固螺栓	扳手
		DMIN	DCON	H	LF	LH	WF	CDX						
KIGHR	4532B-4	45	32	30	200		28.2					CGH-1L	HH6X25	LW-5
	5540B-4	55	40	38	250	27	32.3	12						
	6550B-4	65	50	48	300		37.3							
	4532B-5	45	32	30	200		28.2							
	5540B-5	55	40	38	250	27	32.3	12						
	6550B-5	65	50	48	300		37.3							
	5540B-7	55	40	38	250	27	32.3	12				CGH-2L		

● 适用刀片（GH系列刀片）

形 状		型 号		尺寸(mm)		材质		
				CW	RE	YL10	YL740	YL930
	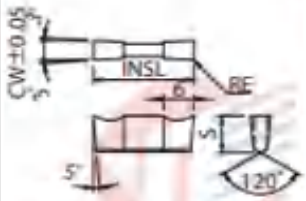	GH	4020-02	4.0	0.2	●	○	●
			4020-05		0.5	●	○	●
			4520-02	4.5	0.2	●	○	●
			4520-05		0.5	●	○	●
			5020-02	5.0	0.2	●	○	●
			5020-05		0.5	●	○	●
			5520-02	5.5	0.2	●	○	●
			5520-05		0.5	●	○	●
			6020-02	6.0	0.2	●	○	●
			6020-05		0.5	●	○	●
			6520-02	6.5	0.2	●	○	●
			6520-05		0.5	●	○	●
	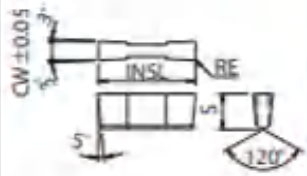		7020-02	7.0	0.2	●	○	●
			7020-05		0.5	●	○	●
			7520-02	7.5	0.2	●	○	●
			7520-05		0.5	●	○	●
			8020-02	8.0	0.2	●	○	●
			8020-05		0.5	●	○	●

陶瓷刀片为上述形状

YUNLI 允利刀具

TQS四角槽刀片

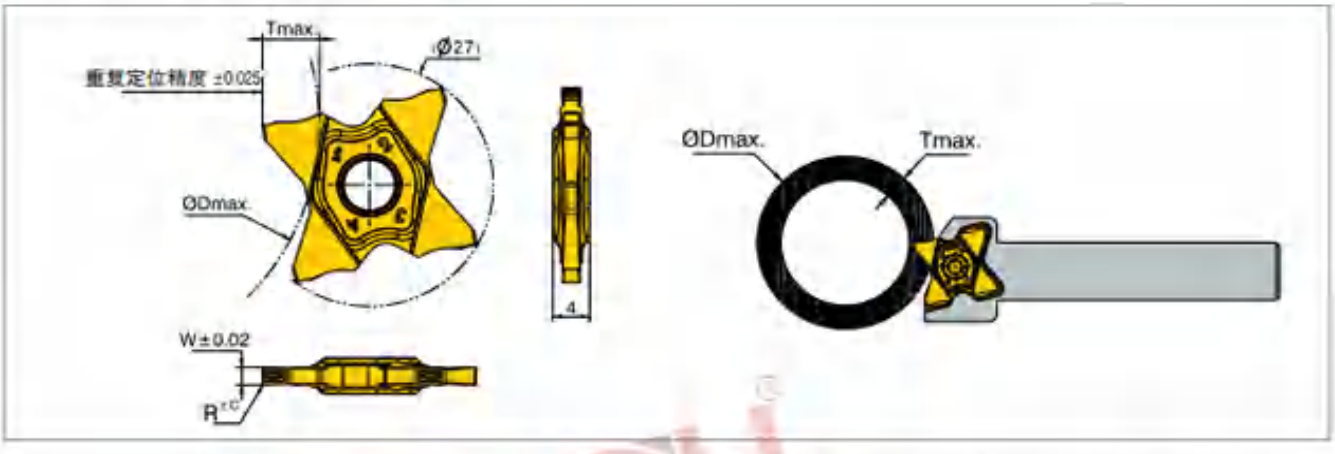

型号	W ± 0.02	R	Tmax	YL10	YL740	YL930
TQS27-0.50-0.00	0.50	0.00	1.0	●	●	●
TQS27-0.50-0.04	0.50	0.04	2.5	●	●	●
TQS27-0.75-0.10	0.75	0.10	2.5	●	●	●
TQS27-0.80-0.00	0.80	0.00	1.6	●	●	●
TQS27-1.00-0.06	1.00	0.06	3.5	●	●	●
TQS27-1.00-0.10	1.00	0.10	3.5	●	●	●
TQS27-1.04-0.00	1.04	0.00	2.0	●	●	●
TQS27-1.20-0.00	1.20	0.00	2.0	●	●	●
TQS27-1.25-0.10	1.25	0.10	3.5	●	●	●
TQS27-1.25-0.20	1.25	0.20	3.5	●	●	●
TQS27-1.40-0.00	1.40	0.00	2.0	●	●	●
TQS27-1.47-0.00	1.47	0.00	2.5	●	●	●
TQS27-1.50-0.10	1.50	0.10	5.0	●	●	●
TQS27-1.50-0.20	1.50	0.20	5.0	●	●	●
TQS27-1.57-0.15	1.57	0.15		●	●	●
TQS27-1.57-0.79	1.57	0.79		●	●	●
TQS27-1.70-0.10	1.70	0.10		●	●	●
TQS27-1.75-0.10	1.75	0.10	3.0	●	●	●
TQS27-1.75-0.20	1.75	0.20		●	●	●
TQS27-1.78-0.18	1.78	0.18		●	●	●
TQS27-1.85-0.20	1.85	0.20		●	●	●
TQS27-1.96-0.15	1.96	0.15		●	●	●
TQS27-2.00-0.10		0.10	6.4	●	●	●
TQS27-2.00-0.20	2.00	0.20		●	●	●
TQS27-2.00-1.00		1.00	3.5	●	●	●
TQS27-2.22-0.15	2.22	0.15	3.5	●	●	●
TQS27-2.30-0.20	2.30	0.20		●	●	●
TQS27-2.39-0.15	2.39	0.15		●	●	●
TQS27-2.39-1.20	2.39	1.20		●	●	●
TQS27-2.47-0.20	2.47	0.20	5.0	●	●	●
TQS27-2.50-0.10	2.50	0.10		●	●	●
TQS27-2.50-0.30	2.50	0.30		●	●	●
TQS27-2.70-0.10	2.70	0.10	6.2	●	●	●
TQS27-2.87-0.20	2.87	0.20		●	●	●
TQS27-3.00-0.00		0.00		●	●	●
TQS27-3.00-0.20		0.20		●	●	●
TQS27-3.00-0.30	3.00	0.30		●	●	●
TQS27-3.00-0.40		0.40	6.4	●	●	●
TQS27-3.00-1.50		1.50		●	●	●
TQS27-3.15-0.15	3.15	0.15		●	●	●
TQS27-3.18-0.20	3.18	0.20		●	●	●

TQHR四角槽刀杆

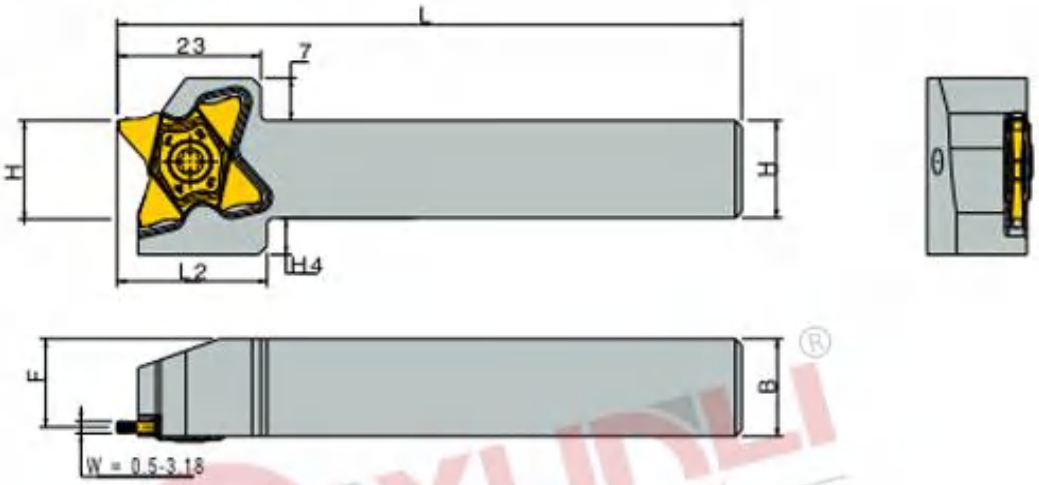

型号	H	B	F	L	L2	H4
TQHR/L 10-27	10	10	8.5	120	24	9
TQHR/L 12-27	12	12	10.5			8
TQHR/L 16-27	16	16	14.5			6
TQHR/L 20-27	20	20	18.5			2
TQHR/L 25-27	25	25	23.5	135	-	-

螺钉	扳手	刀片
M5*12	T 20	TQS27

JS-STCL18四角槽刀杆

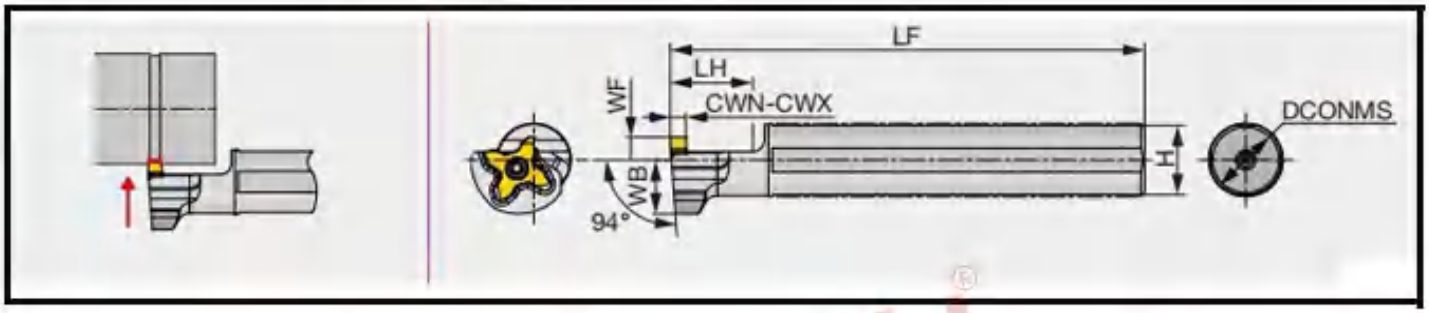

型号	CWN	CWX	DCONMS	H	LF	LH	WB	WF
JS14H-STCL18	0.33	3	14	13	100	20	14	6
JS159F-STCL18	0.33	3	15.875	15	85	20	14	6
JS16F-STCL18	0.33	3	16	15	85	20	14	6
JS19G-STCL18	0.33	3	19.05	18	90	20	14	6
JS19X-STCL18	0.33	3	19.05	18	120	20	14	6
JS20G-STCL18	0.33	3	20	19	90	20	14	6
JS20X-STCL18	0.33	3	20	19	120	20	14	6
JS22X-STCL18	0.33	3	22	21	120	20	12.25	10
JS25H-STCL18	0.33	3	25	24	100	20	12.25	10
JS254X-STCL18	0.33	3	25.4	24	120	20	12.25	10

STCLR/L四角槽刀杆

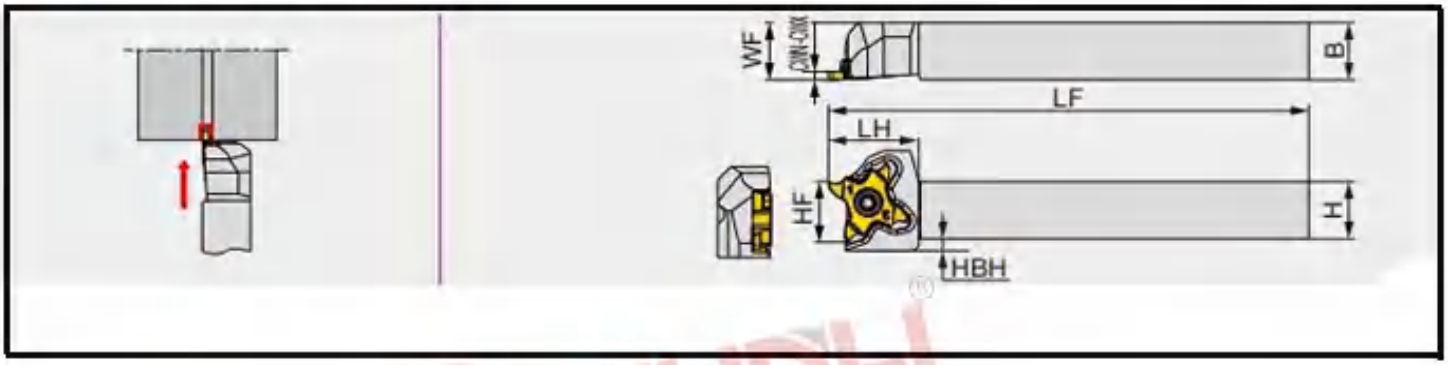

型号	CWN	CWX	H	B	LF	LH	HF	WF	HBH
STCR/L1010X18	0.33	3	10	10	120	18.5	10	10	4.5
STCR/L1212F18	0.33	3	12	12	85	18.5	12	12	2.5
STCR/L1212X18	0.33	3	12	12	120	18.5	12	12	2.5
STCR/L1616X18	0.33	3	16	16	120	18.5	16	16	-
STCR/L2020H18	0.33	3	20	20	100	18.5	20	20	-
STCR/L2020X18	0.33	3	20	20	120	23	20	25	-
STCR/L2525Z18	0.33	3	25	25	135	23	25	30	-

STCR/L-CHP四角槽刀杆

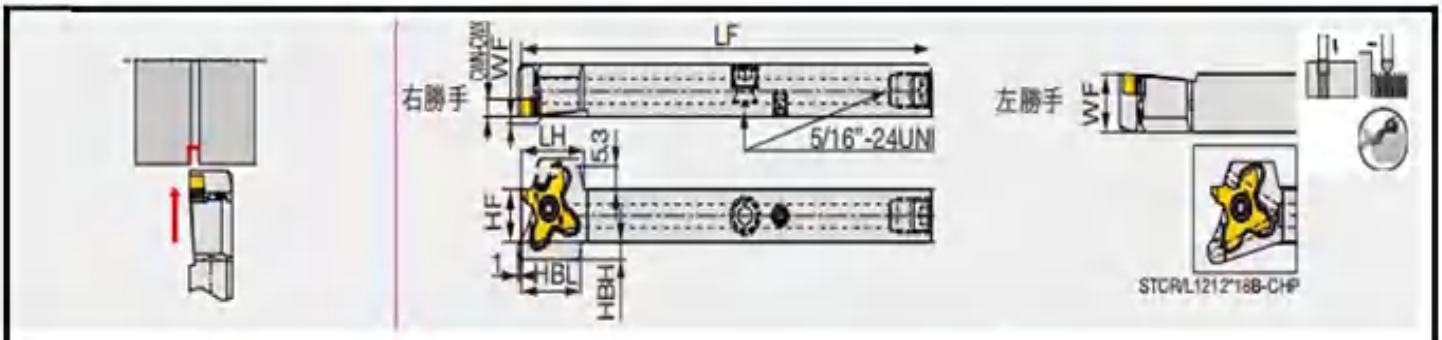

型号	CWN	CWX	H	B	LF	LH	HF	WF	HBL	HBH
STCR/L1212X18-CHP***(1)	0.33	3	12	12	120	18.5	12	0/12	17.5	4
STCR/L1212X18B-CHP (1)	0.33	3	12	12	120	18.5	12	0/12	17.5	4
STCR/L1616X18-CHP (1)	0.33	3	16	16	120	18.5	16	0/16	-	-

TCP18R/L四角型槽刀片

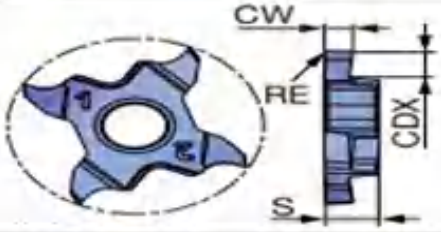

型号	CW±0.02	RE	涂层 YL10	涂层 YL740	涂层 YL930	CDX	S
TCP18R/L033-005	0.33	0.05	●	○	●	0.8	4
TCP18R/L043-005	0.43	0.05	●	○	●	1.2	4
TCP18R/L050-005	0.5	0.05	●	○	●	1.2	4
TCP18R/L075-005	0.75	0.05	●	○	●	2	4
TCP18R/L095-005	0.95	0.05	●	○	●	2	4
TCP18R/L100-010	1	0.1	●	○	●	2	4
TCP18R/L120-010	1.2	0.1	●	○	●	2	4
TCP18R/L125-010	1.25	0.1	●	○	●	2	4
TCP18R/L140-010-35	1.4	0.1	●	○	●	3.5*	4
TCP18R/L145-010	1.45	0.1	●	○	●	2.5	4
TCP18R/L145-010-35	1.45	0.1	●	○	●	3.5*	4
TCP18R/L150-010	1.5	0.1	●	○	●	2.5	4
TCP18R/L150-010-35	1.5	0.1	●	○	●	3.5*	4
TCP18R/L175-010	1.75	0.1	●	○	●	2.5	4
TCP18R/L175-010-35	1.75	0.1	●	○	●	3.5*	4
TCP18R/L200-010	2	0.1	●	○	●	2.5	4
TCP18R/L200-010-35	2	0.1	●	○	●	3.5*	4
TCP18R/L250-010	2.5	0.1	●	○	●	2.5	4
TCP18R/L250-010-35	2.5	0.1	●	○	●	3.5*	4
TCP18R/L300-010	3	0.1	●	○	●	2.5	4
TCP18R/L300-010-35	3	0.1	●	○	●	3.5*	4

YUNLI 允利刀具

TCG18R/L四角型槽刀片

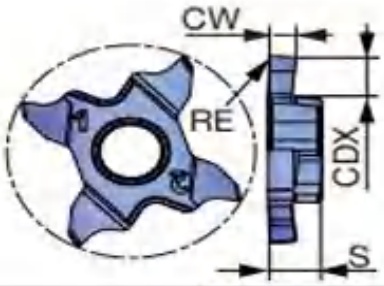

型号	CW±0.02	RE	涂层			CDX	S
			YL10	YL740	YL930		
TCG18R/L100-010	1	0.1	●	○	●	2	4
TCG18R/L120-010	1.2	0.1	●	○	●	2	4
TCG18R/L125-010	1.25	0.1	●	○	●	2	4
TCG18R/L125-020	1.25	0.2	●	○	●	2	4
TCG18R/L130-020	1.3	0.2	●	○	●	2	4
TCG18R/L140-010	1.4	0.1	●	○	●	3.5°	4
TCG18R/L140-020	1.4	0.2	●	○	●	3.5°	4
TCG18R/L145-010	1.45	0.1	●	○	●	3.5°	4
TCG18R/L145-020	1.45	0.2	●	○	●	3.5°	4
TCG18R/L150-010	1.5	0.1	●	○	●	3.5°	4
TCG18R/L150-020	1.5	0.2	●	○	●	3.5°	4
TCG18R/L160-020	1.6	0.2	●	○	●	3.5°	4
TCG18R/L170-020	1.7	0.2	●	○	●	3.5°	4
TCG18R/L175-010	1.75	0.1	●	○	●	3.5°	4
TCG18R/L175-020	1.75	0.2	●	○	●	3.5°	4
TCG18R/L185-020	1.85	0.2	●	○	●	3.5°	4
TCG18R/L195-020	1.95	0.2	●	○	●	3.5°	4
TCG18R/L200-010	2	0.1	●	○	●	3.5°	4
TCG18R/L200-020	2	0.2	●	○	●	3.5°	4
TCG18R/L225-020	2.25	0.2	●	○	●	3.5°	4
TCG18R/L230-020	2.3	0.2	●	○	●	3.5°	4
TCG18R/L250-010	2.5	0.1	●	○	●	3.5°	4
TCG18R/L250-020	2.5	0.2	●	○	●	3.5°	4
TCG18R/L250-030	2.5	0.3	●	○	●	3.5°	4
TCG18R/L265-030	2.65	0.3	●	○	●	3.5°	4
TCG18R/L280-030	2.8	0.3	●	○	●	3.5°	4
TCG18R/L300-010	3	0.1	●	○	●	3.5°	4
TCG18R/L300-020	3	0.2	●	○	●	3.5°	4
TCG18R/L300-030	3	0.3	●	○	●	3.5°	4

TCP18R/L-F四角型槽刀片

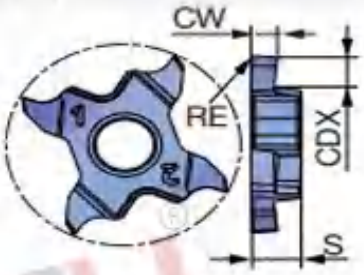

型号	CW±0.02	RE	涂层			CDX	S
			YL10	YL740	YL930		
TCP18R/L033F-005	0.33	0.05	●	○	●	0.8	4
TCP18R/L043F-005	0.43	0.05	●	○	●	1.2	4
TCP18R/L050F-005	0.5	0.05	●	○	●	1.2	4
TCP18R/L075F-005	0.75	0.05	●	○	●	2	4
TCP18R/L095F-005	0.95	0.05	●	○	●	2	4
TCP18R/L100F-005	1	0.05	●	○	●	2	4
TCP18R/L100F-010	1	0.1	●	○	●	2	4
TCP18R/L120F-005	1.2	0.05	●	○	●	2	4
TCP18R/L120F-010	1.2	0.1	●	○	●	2	4
TCP18R/L125F-005	1.25	0.05	●	○	●	2	4
TCP18R/L125F-010	1.25	0.1	●	○	●	2	4
TCP18R/L140F-010-35	1.4	0.1	●	○	●	3.5*	4
TCP18R/L145F-005-35	1.45	0.05	●	○	●	3.5*	4
TCP18R/L145F-010	1.45	0.1	●	○	●	2.5	4
TCP18R/L145F-010-35	1.45	0.1	●	○	●	3.5*	4
TCP18R/L150F-005-35	1.5	0.05	●	○	●	3.5*	4
TCP18R/L150F-010	1.5	0.1	●	○	●	2.5	4
TCP18R/L150F-010-35	1.5	0.1	●	○	●	3.5*	4
TCP18R/L175F-005-35	1.75	0.05	●	○	●	3.5*	4
TCP18R/L175F-010	1.75	0.1	●	○	●	2.5	4
TCP18R/L175F-010-35	1.75	0.1	●	○	●	3.5*	4
TCP18R/L200F-005-35	2	0.05	●	○	●	3.5*	4
TCP18R/L200F-010	2	0.1	●	○	●	2.5	4
TCP18R/L200F-010-35	2	0.1	●	○	●	3.5*	4
TCP18R/L250F-010	2.5	0.1	●	○	●	2.5	4
TCP18R/L250F-010-35	2.5	0.1	●	○	●	3.5*	4
TCP18R/L300F-010	3	0.1	●	○	●	2.5	4

STCR/L-27四角型槽刀杆

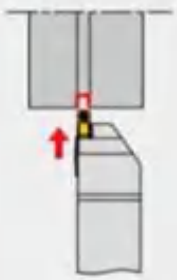

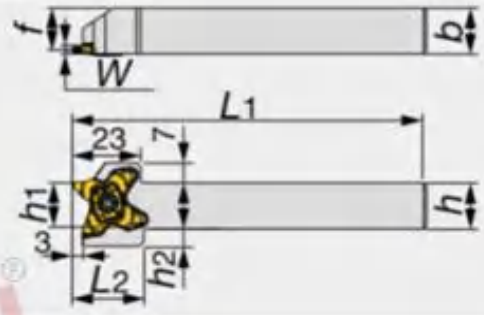

型号	W	h1	b	h	L1	f	h2	L2
STCR/L1010-27	0.5 - 3.18	10	10	10	120	8.5	9.5	24
STCR/L1212-27	0.5 - 3.18	12	12	12	120	10.5	8	24
STCR/L1616-27	0.5 - 3.18	16	16	16	120	14.5	6	24
STCR/L2020-27	0.5 - 3.18	20	20	20	120	18.5	2	24
STCR/L2525-27	0.5 - 3.18	25	25	25	135	23.5	-	-

STCR/L-27-CHP四角型槽刀杆

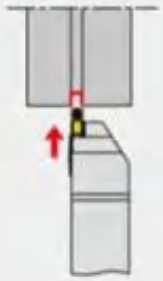

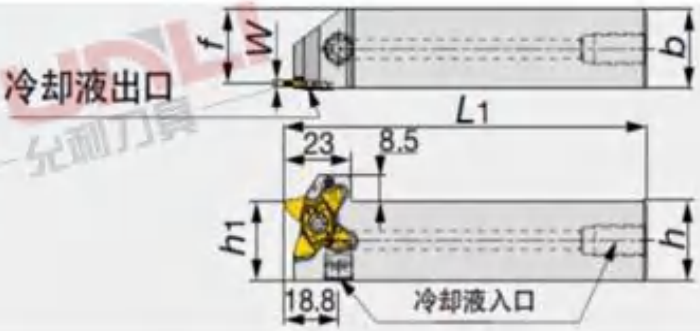

型号	W	h1	b	h	L1	f
STCR/L2525-27-CHP	0.5 - 3.18	25	25	25	125	23.5

TCM27四角型槽刀片

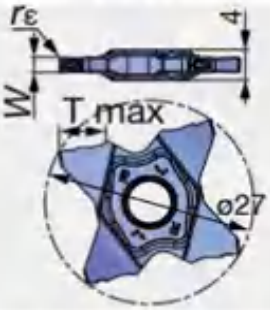

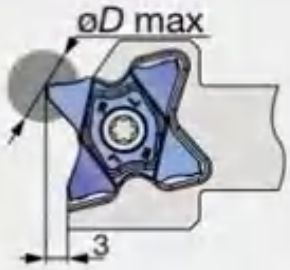

型号	W ± 0.02	rε	涂层			T max	øD max
			YL10	YL740	YL930		
TCM27-150-010	1.5	0.1	●	○	●	5.7	11.4
TCM27-150-020	1.5	0.2	●	○	●	5.7	11.4
TCM27-157-015	1.57	0.15	●	○	●	3	6
TCM27-170-010	1.7	0.1	●	○	●	3	6
TCM27-175-010	1.75	0.1	●	○	●	3	6
TCM27-175-020	1.75	0.2	●	○	●	3	6
TCM27-178-018	1.78	0.18	●	○	●	3	6
TCM27-185-020	1.85	0.2	●	○	●	3	6
TCM27-196-015	1.96	0.15	●	○	●	3	6
TCM27-200-010	2	0.1	●	○	●	6.4	12.8
TCM27-200-020	2	0.2	●	○	●	6.4	12.8
TCM27-222-015	2.22	0.15	●	○	●	3.5	7
TCM27-230-020	2.3	0.2	●	○	●	3.5	7
TCM27-239-015	2.39	0.15	●	○	●	5.7	11.4
TCM27-247-020	2.47	0.2	●	○	●	5.7	11.4
TCM27-250-010	2.5	0.1	●	○	●	5.7	11.4
TCM27-250-030	2.5	0.3	●	○	●	5.7	11.4
TCM27-270-010	2.7	0.1	●	○	●	6.2	12.4
TCM27-287-020	2.87	0.2	●	○	●	6.2	12.4
TCM27-300-000	3	0	●	○	●	6.4	12.8
TCM27-300-020	3	0.2	●	○	●	6.4	12.8
TCM27-300-030	3	0.3	●	○	●	6.4	12.8
TCM27-300-040	3	0.4	●	○	●	6.4	12.8
TCM27-315-015	3.15	0.15	●	○	●	6.4	12.8
TCM27-318-020	3.18	0.2	●	○	●	6.4	12.8

TCS27-R/L四角型槽刀片

型号	W ± 0.02	rε	涂层			T max	θ°
			YL10	YL740	YL930		
TCS27-100-15R/L	1	0.06	●	○	●	3.5	15
TCS27-150-6R/L	1.5	0.06	●	○	●	5.7	6
TCS27-150-15R/L	1.5	0.06	●	○	●	5.7	15
TCS27-200-6R/L	2	0.1	●	○	●	6.4	6
TCS27-200-15R/L	2	0.1	●	○	●	6.4	15

TCS27四角型槽刀片

型号	W ± 0.02	rε	涂层			
			YL10	YL740	YL930	
TCS27-157-079	1.57	0.79	●	○	●	3
TCS27-200-100	2	1	●	○	●	3
TCS27-239-120	2.39	1.2	●	○	●	5.7
TCS27-300-150	3	1.5	●	○	●	6.4

TCS27四角型槽刀片

型号	W ± 0.02	rε	涂层			T max	øD max
			YL10	YL740	YL930		
TCS27-050-000	0.5	0	●	○	●	1	2
TCS27-050-004	0.5	0.04	●	○	●	2.5	5
TCS27-075-010	0.75	0.1	●	○	●	2.5	5
TCS27-080-000	0.8	0	●	○	●	1.6	3.2
TCS27-100-006	1	0.06	●	○	●	3.5	7
TCS27-100-010	1	0.1	●	○	●	3.5	7
TCS27-104-000	1.04	0	●	○	●	2	4
TCS27-120-000	1.2	0	●	○	●	2	4
TCS27-125-010	1.25	0.1	●	○	●	3.5	7
TCS27-125-020	1.25	0.2	●	○	●	3.5	7
TCS27-140-000	1.4	0	●	○	●	2	4
TCS27-147-000	1.47	0	●	○	●	2.5	5
TCS27-150-010	1.5	0.1	●	○	●	5.7	11.4
TCS27-150-020	1.5	0.2	●	○	●	5.7	11.4
TCS27-157-015	1.57	0.15	●	○	●	3	6

TCS27四角型槽刀片

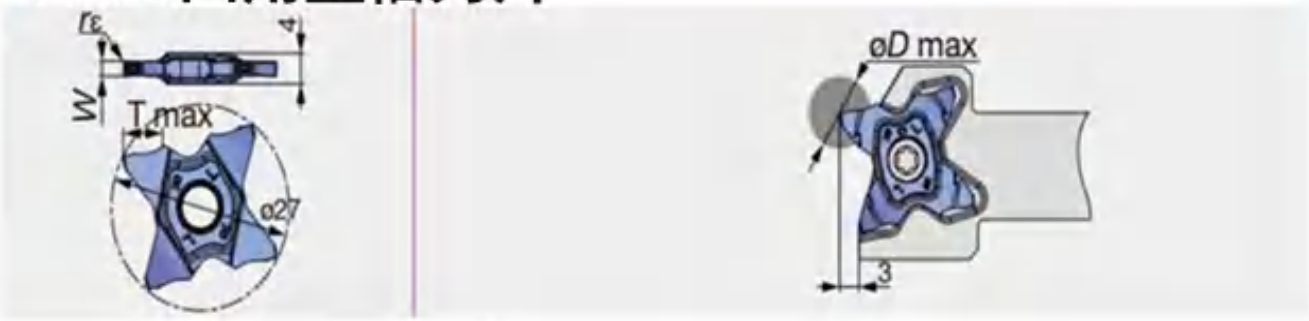

型号	W ± 0.02	rε	涂层			T max	øD max
			YL10	YL740	YL930		
TCS27-170-010	1.7	0.1	●	○	●	3	6
TCS27-175-010	1.75	0.1	●	○	●	3	6
TCS27-175-020	1.75	0.2	●	○	●	3	6
TCS27-178-018	1.78	0.18	●	○	●	3	6
TCS27-185-020	1.85	0.2	●	○	●	3	6
TCS27-196-015	1.96	0.15	●	○	●	3	6
TCS27-200-010	2	0.1	●	○	●	6.4	12.8
TCS27-200-020	2	0.2	●	○	●	6.4	12.8
TCS27-222-015	2.22	0.15	●	○	●	3.5	7
TCS27-230-020	2.3	0.2	●	○	●	3.5	7.
TCS27-239-015	2.39	0.15	●	○	●	5.7	11.4
TCS27-247-020	2.47	0.2	●	○	●	5.7	11.4
TCS27-250-010	2.5	0.1	●	○	●	5.7	11.4
TCS27-250-030	2.5	0.3	●	○	●	5.7	11.4
TCS27-270-010	2.7	0.1	●	○	●	6.2	12.4
TCS27-287-020	2.87	0.2	●	○	●	6.2	12.4
TCS27-300-000	3	0	●	○	●	6.4	12.8
TCS27-300-020	3	0.2	●	○	●	6.4	12.8
TCS27-300-030	3	0.3	●	○	●	6.4	12.8
TCS27-300-040	3	0.4	●	○	●	6.4	12.8
TCS27-315-015	3.15	0.15	●	○	●	6.4	12.8
TCS27-318-020	3.18	0.2	●	○	●	6.4	12.8

YUNLI 允利刀具

PENTA17-P-RS/LS五角型槽刀片

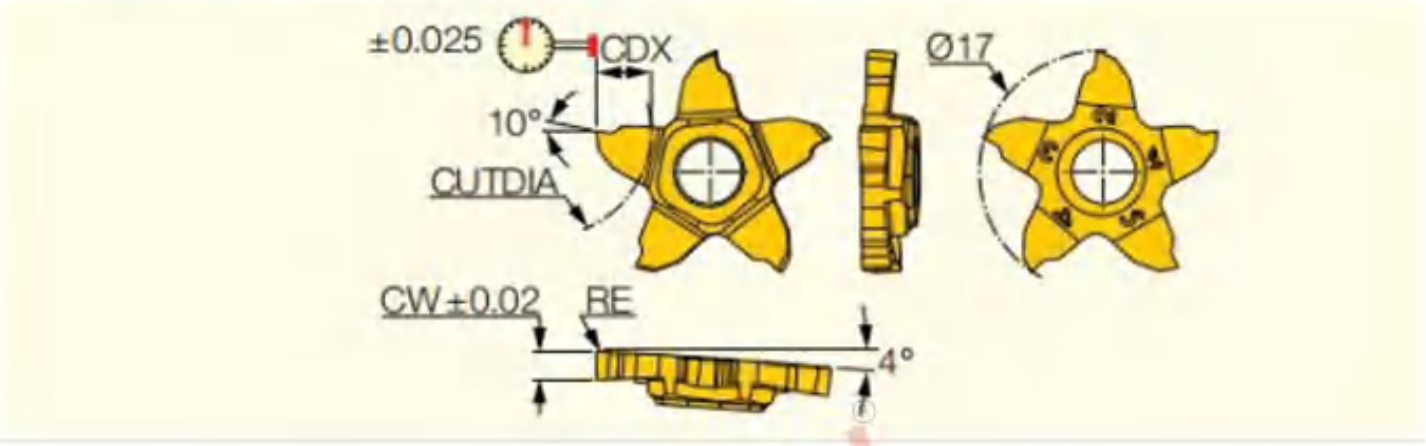

型号	Dimensions CW	RE	CDX	CUTDIA	YL10	YL740	YL930
PENTA 17N025P000R/LS	0.25	0.00	0.60	1.2	•	•	•
PENTA 17N030P000R/LS	0.30	0.00	0.60	1.2	•	•	•
PENTA 17N033P000R/LS	0.33	0.00	0.60	1.2	•	•	•
PENTA 17N043P000R/LS	0.43	0.00	1.00	2.0	•	•	•
PENTA 17N050P000R/LS	0.50	0.00	2.00	4.0	•	•	•
PENTA 17N075P000R/LS	0.75	0.00	2.50	5.0	•	•	•
PENTA 17N080P000R/LS	0.80	0.00	2.50	5.0	•	•	•
PENTA 17N095P000R/LS	0.95	0.00	3.00	6.0	•	•	•
PENTA 17N100P010R/LS	1.00	0.10	3.00	6.0	•	•	•
PENTA 17N120P010R/LS	1.20	0.10	3.00	6.0	•	•	•
PENTA 17N140P010R/LS	1.40	0.10	3.00	6.0	•	•	•
PENTA 17N150P010R/LS	1.50	0.10	4.00	8.0	•	•	•
PENTA 17N157P010R/LS	1.57	0.10	4.00	8.0	•	•	•
PENTA 17N170P010R/LS	1.70	0.10	4.00	8.0	•	•	•
PENTA 17N178P010R/LS	1.78	0.10	4.00	8.0	•	•	•
PENTA 17N196P010R/LS	1.96	0.10	4.00	8.0	•	•	•
PENTA 17N200P010R/LS	2.00	0.10	4.00	8.0	•	•	•
PENTA 17N222P010R/LS	2.22	0.10	4.00	8.0	•	•	•
PENTA 17N230P010R/LS	2.30	0.10	4.00	8.0	•	•	•
PENTA 17N239P010R/LS	2.39	0.10	4.00	8.0	•	•	•
PENTA 17N247P010R/LS	2.47	0.10	4.00	8.0	•	•	•
PENTA 17N250P010R/LS	2.50	0.10	4.00	8.0	•	•	•
PENTA 17N270P010R/LS	2.70	0.10	4.00	8.0	•	•	•
PENTA 17N287P010R/LS	2.87	0.10	4.00	8.0	•	•	•
PENTA 17N300P010R/LS	3.00	0.10	4.00	8.0	•	•	•
PENTA 17N318P010R/LS	3.18	0.10	4.00	8.0	•	•	•

PENTA17-NP-RS/LS五角型槽刀片

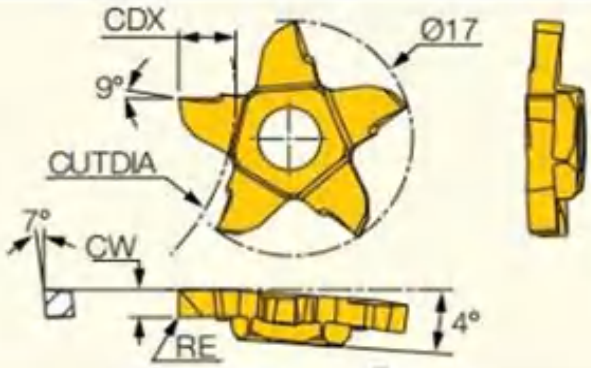

刀片尺寸

型号	Dimensions CW	RE	CDX	CUTDIA	YL10	YL740	YL930
PENTA 17-100NP08R/LS	1.00	0.08	3.00	32.0	•	•	•
PENTA 17-200NP08R/LS	2.00	0.08	4.00	32.0	•	•	•
PENTA 17-300NP08R/LS	3.00	0.08	4.00	32.0	•	•	•

PENTA17-ER/EL五角型槽刀片

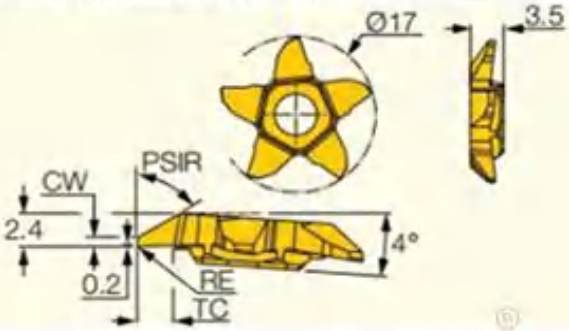

刀片尺寸

型号	Dimensions CW	RE	PSIR	Tc	YL10	YL740	YL930
PENTA 17EL00-07K0LS	0.70	0.00	60.0	4.0	•	•	•
PENTA 17ER00-07K0RS	0.70	0.00	60.0	4.0	•	•	•
PENTA 17EL08-07K0LS	0.70	0.08	60.0	4.0	•	•	•
PENTA 17ER08-07K0RS	0.70	0.08	60.0	4.0	•	•	•

PENTA17-MT-RS/LS五角型槽刀片

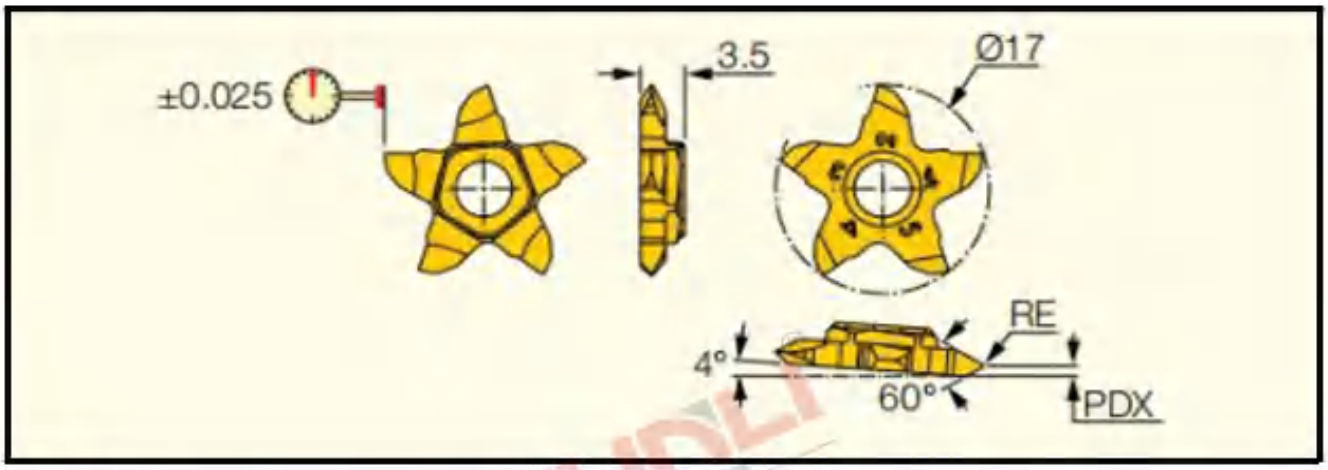

刀片尺寸

型号	TPN(1)	TPX(2)	RE	PDX	YL10	YL740	YL930
PENTA 17-MTL003LS	0.300	1.750	0.03	0.8	•	•	•
PENTA 17-MTR003RS	0.300	1.750	0.03	0.8	•	•	•
PENTA 17-MTL008LS	0.700	3.500	0.08	1.4	•	•	•
PENTA 17-MTR008RS	0.700	3.500	0.08	1.4	•	•	•

PENTA17-WT-RS/LS

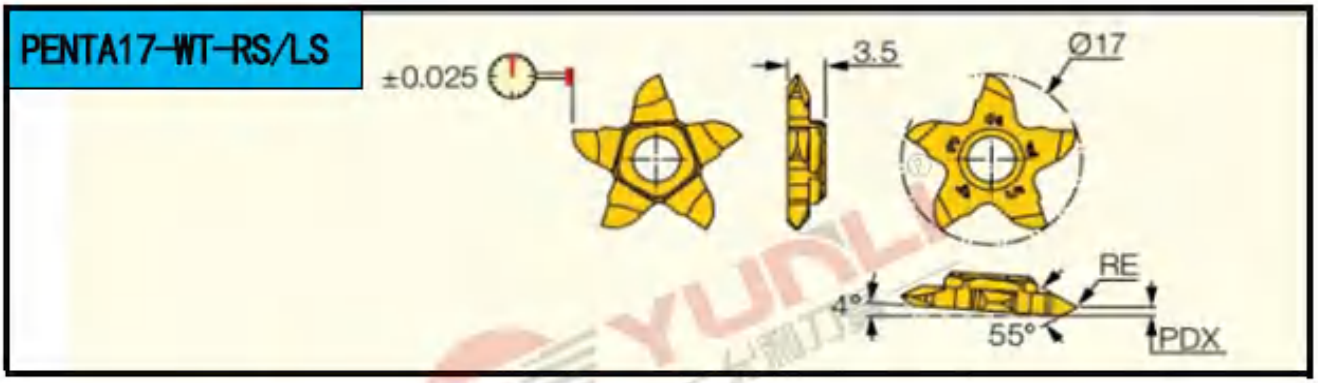

型号	TPIX(1)	TPIN(2)	RE	PDX	YL10	YL740	YL930
PENTA 17-WTL003LS	72.00	17.00	0.03	0.8	•	•	•
PENTA 17-WTR003RS	72.00	17.00	0.03	0.8	•	•	•
PENTA 17-WTL008LS	31.00	7.00	0.08	1.4	•	•	•
PENTA 17-WTR008RS	31.00	7.00	0.08	1.4	•	•	•

PCHRS/LS-17五角型槽刀杆

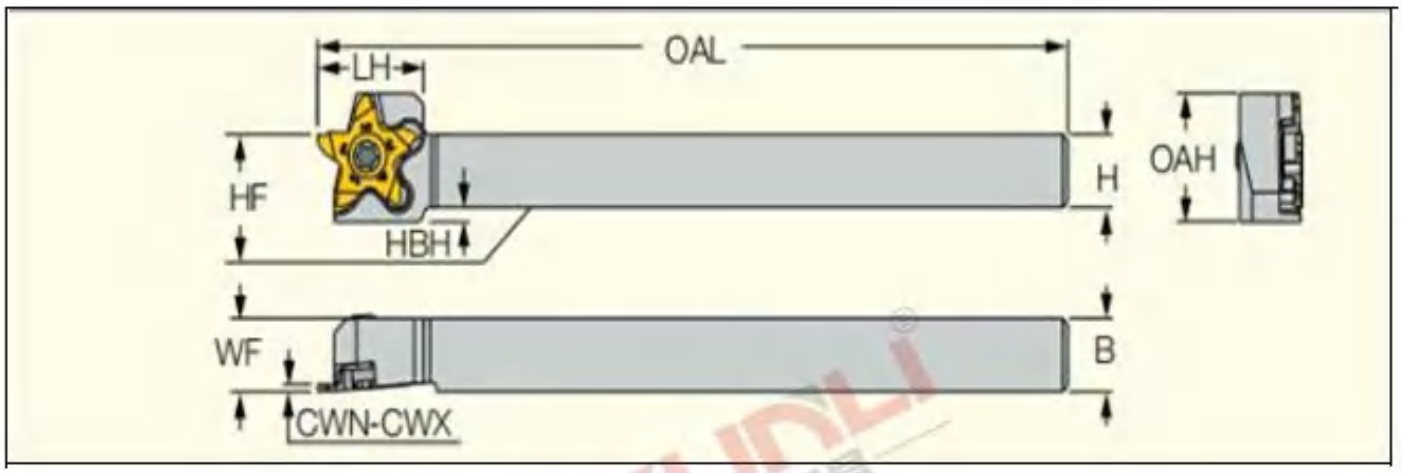

刀杆尺寸

型号	H	B	CWN(1)	CWX(2)	WF
PCHR/LS 10-17	10.0	10.0	0.25	3.18	10.00
PCHR/LS 12-17	12.0	12.0	0.25	3.18	12.00
PCHR/LS 16-17	16.0	16.0	0.25	3.18	16.00
PCHR/LS 20-17	20.0	20.0	0.25	3.18	20.00

型号	OAL	LH	HBH	OAH	HF
PCHR/LS 10-17	120.00	17.0	2.0	17.6	10.0
PCHR/LS 12-17	120.00	17.0	-	17.6	12.0
PCHR/LS 16-17	120.00	17.0	-	21.6	16.0
PCHR/LS 20-17	120.00	17.0	-	25.6	20.0

CTR/L切断切槽刀片

刀杆方向	右手刀杆用（SCTR）			左手刀杆用（SCTL）		
刀片型号	CTROOR	CTROON	CTROOL	CTLOOR	CTLOON	CTLOOL
安装在刀杆上状态	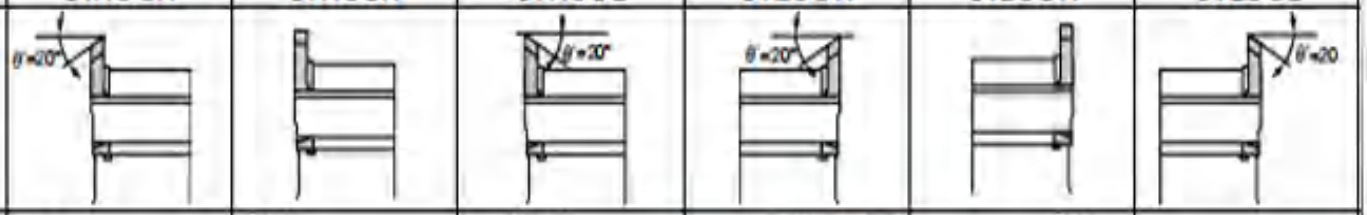					
刀片的形状和尺寸						

刀片尺寸

型号	最大切断径	刃宽 CW	刀尖半径 RE	全长 L	厚度 S	刀片断屑槽	适用刀杆	涂层 YL10	涂层 YL740	涂层 YL930
CTR 050505 R/N/L	5	0.5	0.05	19	7	有	SCT R1010 SCT R1212 SCT R1616	●	○	●
CTR 050500 R/N/L	5	0.5	0					●	○	●
CTR 121005 R/N/L	12	1.0	0.05	19	7	有		●	○	●
CTR 121505 R/N/L	12	1.5						●	○	●
CTR 122005 R/N/L	12	2.0						●	○	●
CTR 121000 R/N/L	12	1.0	0					●	○	●
CTR 121500 R/N/L	12	1.5						●	○	●
CTR 122000 R/N/L	12	2.0						●	○	●
CTR 161005 R/N/L	16	1.0	0.05	23.1	8.3	有	SCT R1010-16 SCT R1212-16 SCT R1616-16	●	○	●
CTR 161505 R/N/L	16	1.5						●	○	●
CTR 162005 R/N/L	16	2.0						●	○	●
CTR 161000 R/N/L	16	1.0	0					●	○	●
CTR 161500 R/N/L	16	1.5						●	○	●
CTR 162000 R/N/L	16	2.0						●	○	●
CTR 050500 R/N/L-NB	5	0.5	0	19	7	无	SCT R1010 SCT R1212 SCT R1616	●	○	●
CTR 121000 R/N/L-NB	12	1.0	0	19	7	无		●	○	●
CTR 121500 R/N/L-NB	12	1.5						●	○	●
CTR 122000 R/N/L-NB	12	2.0						●	○	●
CTR 161000 R/N/L-NB	16	1.0	0	23.1	8.3	无	SCT R1010-16 SCT R1212-16 SCT R1616-16	●	○	●
CTR 161500 R/N/L-NB	16	1.5						●	○	●
CTR 162000 R/N/L-NB	16	2.0						●	○	●

刀片尺寸

型号	最大切断径	刃宽 CW	刀尖半径 RE	全长 L	厚度 S	刀片断屑槽	适用刀杆	涂层 YL10	涂层 YL740	涂层 YL930
CTL 050505 R/N/L	5	0.5	0.05	19	7	有	SCT L1010 SCT L1212 SCT L1616	●	○	●
CTL 050500 R/N/L	5	0.5	0					●	○	●
CTL 121005 R/N/L	12	1.0	0.05	19	7	有		●	○	●
CTL 121505 R/N/L	12	1.5						●	○	●
CTL 122005 R/N/L	12	2.0						●	○	●
CTL 121000 R/N/L	12	1.0	0					●	○	●
CTL 121500 R/N/L	12	1.5						●	○	●
CTL 122000 R/N/L	12	2.0						●	○	●
CTL 161005 R/N/L	16	1.0	0.05	23.1	8.3	有	SCT L1010-16 SCT L1212-16 SCT L1616-16	●	○	●
CTL 161505 R/N/L	16	1.5						●	○	●
CTL 162005 R/N/L	16	2.0						●	○	●
CTL 161000 R/N/L	16	1.0	0					●	○	●
CTL 161500 R/N/L	16	1.5						●	○	●
CTL 162000 R/N/L	16	2.0						●	○	●
CTL 050500 R/N/L-NB	5	0.5	0	19	7	无	SCT L1010 SCT L1212 SCT L1616	●	○	●
CTL 121000 R/N/L-NB	12	1.0	0	19	7	无		●	○	●
CTL 121500 R/N/L-NB	12	1.5						●	○	●
CTL 122000 R/N/L-NB	12	2.0						●	○	●
CTL 161000 R/N/L-NB	16	1.0	0	23.1	8.3	无	SCT L1010-16 SCT L1212-16 SCT L1616-16	●	○	●
CTL 161500 R/N/L-NB	16	1.5						●	○	●
CTL 162000 R/N/L-NB	16	2.0						●	○	●

SCTR/L切断切槽刀杆

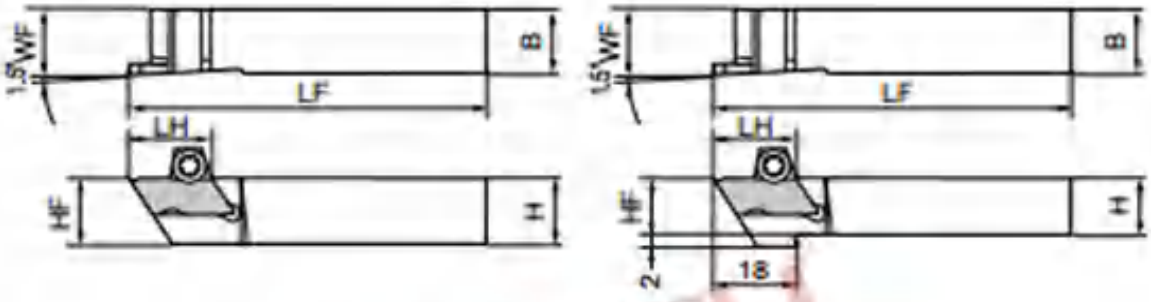

型号	高度 H	宽度 B	全长 LF	刀头距离 WF	刀头高度 HF	头部 LH	适用刀片	平头螺钉	扳手
SCT R1010	10	10	120	10	10	15	CT R05OOOO(-NB) CT R12OOOO(-NB)	BFT0410TBL	TRX08
SCT R1212	12	12	120	12	12	15			
SCT R1616	16	16	120	16	16	15			
SCT R1010-16	10	10	120	10	10	18	CT R16OOOO(-NB)	BFT0410TBL	TRX08
SCT R1212-16	12	12	120	12	12	18			
SCT R1616-16	16	16	120	16	16	18			
SCT L1010	10	10	120	10	10	15	CT L05OOOO(-NB) CT L12OOOO(-NB)	BFT0410TBR	TRX08
SCT L1212	12	12	120	12	12	15			
SCT L1616	16	16	120	16	16	15			
SCT L1010-16	10	10	120	10	10	18	CT L16OOOO(-NB)	BFT0410TBR	TRX08
SCT L1212-16	12	12	120	12	12	18			
SCT L1616-16	16	16	120	16	16	18			

PCHR/L-34五角型槽刀杆(横装)

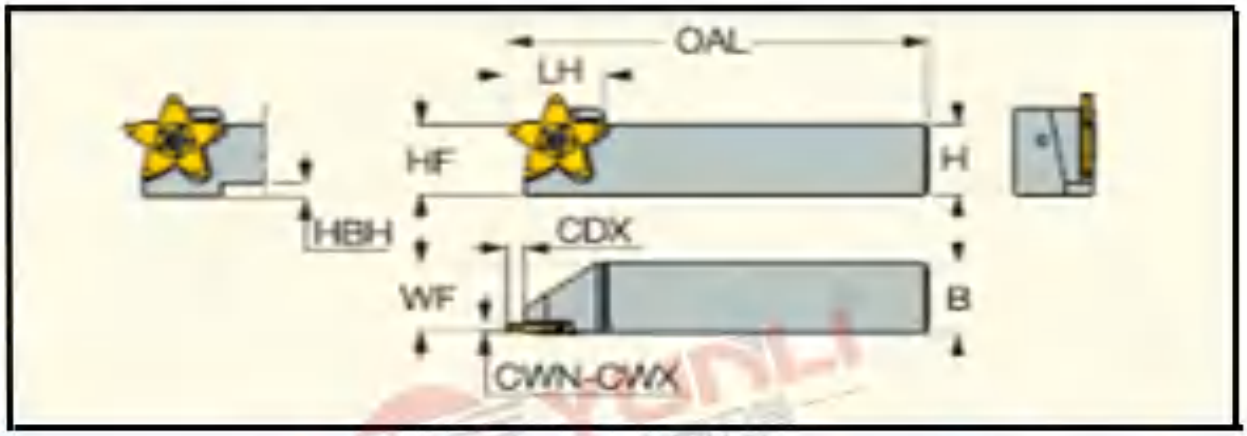

型号	H	B	HF	HBH	OAL	螺丝	扳手
PCHR/L16-34	16	16	16	9	120	M5*12	T20
PCHR/L20-34	20	20	20	6	120	M5*12	T20
PCHR/L25-34	25	25	25	–	135	M5*12	T20

PCHPR/L-34五角型槽刀杆（立装）

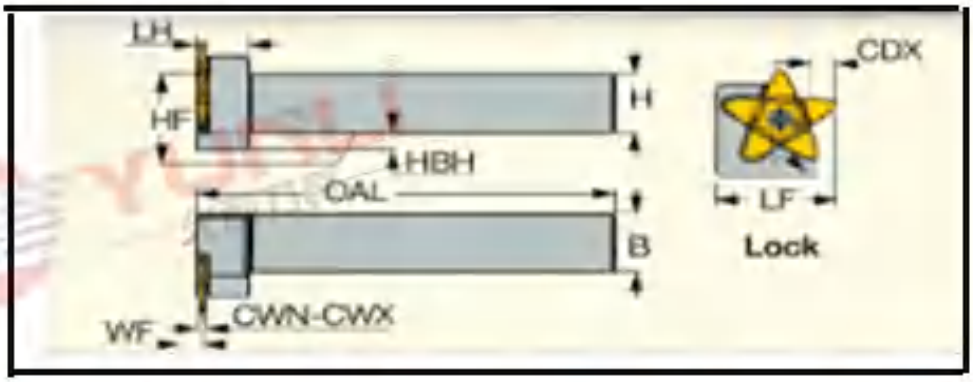

型号	H	B	HF	WF	OAL	螺丝	扳手
PCHPR/L16-34	16	16	16	1.9	120	M5*12	T20
PCHPR/L20-34	20	20	20	1.9	120	M5*12	T20
PCHPR/L25-34	25	25	25	1.9	135	M5*12	T20

6/7/8/9/15GR

形状	刀片型号		尺寸Dimension (mm)								材质 Grade recommended			
											Uncoated grade	PVC coating grade		Ceramic
The basic shape of inserts	Type		W	B	C	θD	A	L	H	rε	YL10	YL740	YL930	YL60
	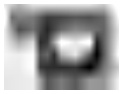	6GR	100	1.0	1.5	1.68	2.30	5.56	6.44	2.34	0.2	●	○	●	○
			150	1.5								●	○	●	○
			200	2.0								●	○	●	○
	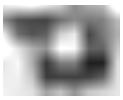	7GR	100	1.0	1.5	1.80	2.58	5.56	7.36	3.08	0.2	●	○	●	○
			150	1.5								●	○	●	○
			200	2.0								●	○	●	○
		8GR	100	1.0	2	2.30	2.58	6.15	10.16	3.87	0.2	●	○	●	○
			150	1.5								●	○	●	○
			200	2.0								●	○	●	○
			250	2.5								●	○	●	○
			300	3.0								●	○	●	○
		9GR	100	1.0	1.5	3.30	2.86	7.74	12.95	4.65	0.2	●	○	●	○
			150	1.5	2.0							●	○	●	○
			200	2.0	3.0							●	○	●	○
			250	2.5								●	○	●	○
			300	3.0								●	○	●	○
			350	3.5								●	○	●	○
		15GR	100	1.0	1.5	5.80	4.80	10.80	20.80	5.10	0.2	●	○	●	○
			150	1.5	2.0							●	○	●	○
			200	2.0	3.0							●	○	●	○
			250	2.5								●	○	●	○
			300	3.0								●	○	●	○
			350	3.5								●	○	●	○
			400	4.0	4.0							●	○	●	○
			450	4.5								●	○	●	○
			500	5.0	5.5							●	○	●	○

6/7/8/9/15GR刀杆

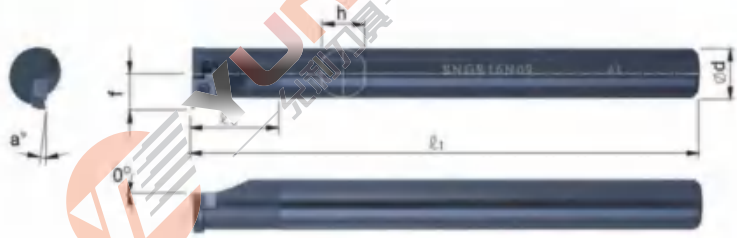

型号	使用刀片	最小加工径	尺寸						螺丝	垫片	垫片螺丝	压板	扳手
			⌀d	f	e1	e2	h	a °					
CNGR/L25R15R	15GR/L...	⌀32	25	18.1	200	47	24	15 °	CSTB-3.5B	SGSR/L151	DTS5-3.5	CSP22	T-15 L3 L3.5
CNGR/L32S15		⌀40	32	22.1	250	50	30	15 °					
CNGR/L40T15		⌀48	40	26.1	300	55	38	15 °					
CNGR/L50U15		⌀58	50	31.1	350	60	48	15 °					

型号	使用刀片	最小加工径 ⌀	规格						螺丝	扳手
			⌀d	f	e1	e2	h	a °		
SNGR/L08H06	6GR/L	⌀8	8	4.7	100	18	7	18 °	CSTB-2	T-6
SNGR/L08H07	7GR/L	⌀10	8	5.8	100	23	7	15 °	CSTB-2 ,2S	T-7
SNGR/L10K07		⌀12	10	6.8	125	29	9	15 °		
SNGR/L10K08	8GR/L	⌀14	10	7.6	125	15	9	15 °	CSTB-2.2	
SNGR/L12M08		⌀16	12	8.6	150	18	11	15 °		
SNGR/L10K08-2W		⌀14	10	7.6	125	15	9	15 °		
SNGR/L12M08-2W		⌀16	12	8.6	150	18	11	15 °		
SNGR/L16N09	9GR/L	⌀20	16	11.6	160	20	15	15 °	CSTB-2B	T-8
SNGR/L20Q09		⌀24	20	13.6	180	25	19	15 °		
SNGR/L16N09-2W		⌀20	16	11.6	160	20	15	15 °		
SNGR/L20Q09-2W		⌀24	20	13.6	180	25	19	15 °		
HSNGR/L08H06B	6GR/L	⌀8	8	4.7	100	18	7	15 °	CSTB-2	T-6
HSNGR/L08H07B	7GR/L	⌀10	8	5.8	100	23	7	15 °	CSTB-2 ,2S	T-7
HSNGR/L10H07B		⌀12	10	6.8	125	29	9	15 °		
HSNGR/L10K08B	8GR/L	⌀14	10	7.6	125	15	9	15 °	CSTB-2.2	
HSNGR/L12M08B		⌀16	12	8.6	150	18	11	15 °		
HSNGR/L16N09B	9GR/L	⌀20	16	11.6	160	20	15	15 °	CSTB-2.5L080	T-8
HSNGR/L20Q09B		⌀24	20	13.6	180	25	19	15 °		

内槽刀片 GER-A/B/C/D/E

形状 The basic shape of inserts	刀片型号 Type		尺寸Dimension (mm) W	B	C	r ε	材质 Grade recommended Uncoated grade YL10	PVC coating YL740	PVC coating YL930	Ceramic YL60
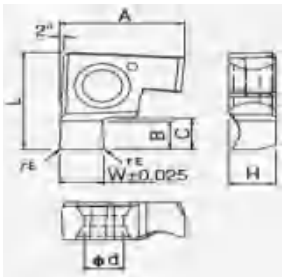	GER/L	100-005A	1	1.5	1.8	0.05	●		●	○
		120-005A	1.2				●		●	○
		125-005A	1.25				●		●	○
		150-005A	1.5			0.1	●		●	○
		200-010A	2				●		●	○
	GER/L	100-005B	1	2.2	2.6	0.05	●		●	○
		120-005B	1.2				●		●	○
		125-005B	1.25				●		●	○
		145-010B	1.45			0.1	●		●	○
		150-010B	1.5				●		●	○
		200-010B	2				●		●	○
		250-020B	2.5			0.2	●		●	○
		300-020B	3				●		●	○
	GER	100 050AR	1	1.5	1.8	0.5	●		●	○
		200 100AR	2			1	●		●	○
		100-050BR	1	2.2	2.6	0.5	●		●	○
		200-100BR	2			1	●		●	○
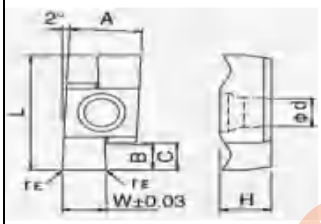	GER/L	100-005C	1	2.5	2.7	0.05	●		●	○
		120-005C	1.2				●		●	○
		125-005C	1.25				●		●	○
		140-005C	1.4				●		●	○
		145-010C	1.45			0.1	●		●	○
		150-010C	1.5				●		●	○
		170-010C	17				●		●	○
		185-010C	185				●		●	○
		195-010C	195				●		●	○
		200-010C	2				●		●	○
		250-020C	2.5			0.2	●		●	○
		300-020C	3				●		●	○
		350-020C	3.5				●		●	○
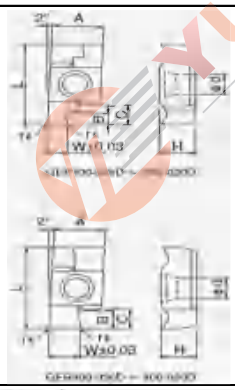	GER/L	100-005D	1	2.5	4.8	0.05	●		●	○
		140-005D	1.4				●		●	○
		145-010D	1.45			0.1	●		●	○
		150-010D	1.5	3			●		●	○
		170-010D	1.7				●		●	○
		185-010D	1.85				●		●	○
		195-010D	1.95				●		●	○
		200-010D	2	3.2			●		●	○
		225-010D	2.25				●		●	○
		230-020D	2.3			0.2	●		●	○
		250-020D	2.5				●		●	○
		275-020D	2.75				●		●	○
		280-020D	2.8				●		●	○
		300-020D	3	4.5			●		●	○
		330-020D	3.3				●		●	○
		350-020D	3.5				●		●	○
		400-020D	4				●		●	○
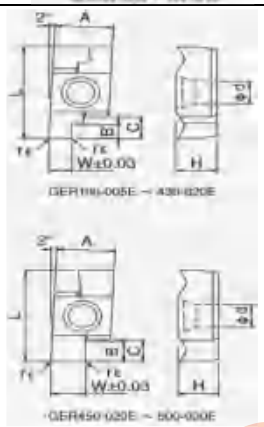	GER/L	100-005E	1	2.5	6.8	0.05	●		●	○
		150-010E	1.5	3		0.1	●		●	○
		170-010E	1.7				●		●	○
		185-010E	1.85				●		●	○
		195-010E	1.95				●		●	○
		200-010E	2	3.2			●		●	○
		225-020E	2.25				●		●	○
		230-020E	2.3			0.2	●		●	○
		250-020E	2.5	4.5			●		●	○
		275-020E	2.75				●		●	○
		280-020E	2.8				●		●	○
		300-020E	3				●		●	○
		330-020E	3.3				●		●	○
		350-020E	3.5	5.5			●		●	○
		400-020E	4				●		●	○
		430-020E	4.3				●		●	○
		450-020E	4.5	6.5			●		●	○
		460-020E	4.6				●		●	○
		500-020E	5				●		●	○
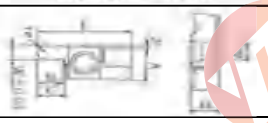	GER	200-100CR	2	2.5	2.7	1	●		●	○
		250-125CR	2.5			1.25	●		●	○
		300-150CR	3			1.5	●		●	○
	GER	200-100DR	2	3.2	4.8	1	●		●	○
		300-150DR	3	4.5		1.5	●		●	○

GER-A/B/C/D/E刀杆

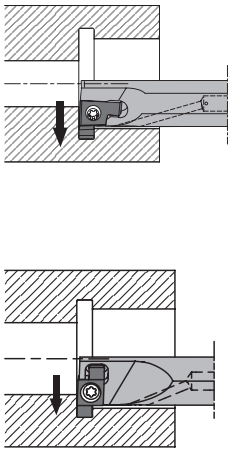

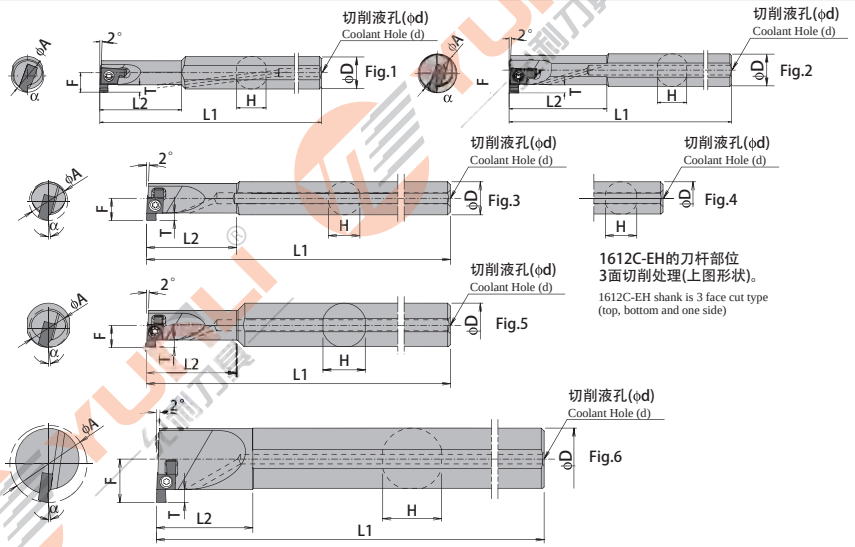

●本图示为右手(R)
Right-hand shown

右手刀杆(R)使用右手刀片(R),左手刀杆(L)使用左手刀片(L)。
R-hand Insert for R-hand Toolholder, L-hand Insert for L-hand Toolholder

型号		库存		最小加工径	尺寸(mm)						
		R	L	DA	DD	H	L1	L2	F	T	Dd
	SIGER/L0808A-EH	●	●	8	8	7.2	100	20	4.8	1.5	3
	SIGER/L1010B-EH	●	●	10	10	9	125	25	6.2	2.2	3
	SIGER/L1210B-EH	●	●	12			125	30	7		
	SIGER/L1412C-EH	●	●	14	12	11.4	150	33	8	2.5	4
	SIGER/L1612C-EH	●	●	16			150	20	8.5		
	SIGER/L1616C-EH	●	●		16	15	160	36	9		5
	SIGER/L2020D-EH	●	●	20	20	19	180	40	12.1	4.5	5
	SIGER/L2525E-EH	●	●	25	25	24	200	45	15.6	6.5	5
	SIGER/L3232E-EH	●	●	32	32	30.4	220	55	19		
	SIGER/L4032E-EH	●	●	40			250	45	23		

◇ 内槽刀片 GVR-SS/S/A/B/C

型号	长	宽	高
GVR/L-SS	9	3.6	3.0
GVR/L-S	11	4.0	4.0
GVR/L-A	12	4.0	5.0
GVR/L-B	15	4.5	5.5
GVR/L-C	21	5.8	6.5

形状		型号		尺寸 Dimension (mm)				材质 Grade recommended			
								Uncoated grade	PVC coating grade		Ceramic
The basic shape of inserts		Type		W	B	r ε	T	YL10	YL740	YL930	YL60
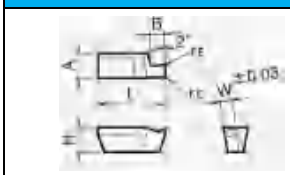	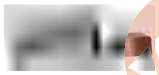	GVR/L	100-020SS	1	2.3	0.2		●		●	○
			125-020SS	1.25				●		●	○
			145-020SS	1.45				●		●	○
			200-020SS	2				●		●	○
			250-020SS	2.5				●		●	○
			300-020SS	3				●		●	○
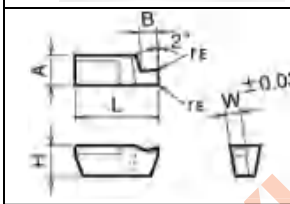		GVR/L	100-020S	1	2.3	0.2		●		●	○
			125-020S	1.25				●		●	○
			145-020S	1.45				●		●	○
			185-020S	1.85				●		●	○
			200-020S	2				●		●	○
			250-020S	2.5				●		●	○
			340-020S	3.4				●		●	○
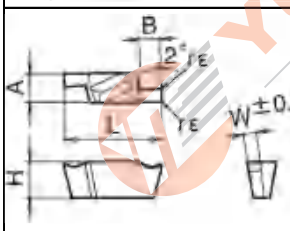	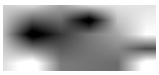	GVR/L	100-020A	1	2.3	0.2		●		●	○
			125-020A	1.25				●		●	○
			145-020A	1.45				●		●	○
			185-020A	1.85				●		●	○
			200-020A	2				●		●	○
			250-020A	2.5				●		●	○
			300-020A	3				●		●	○
			340-020A	3.4				●		●	○
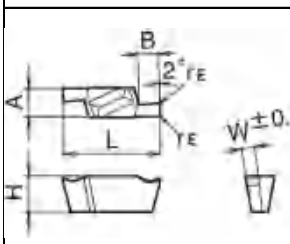	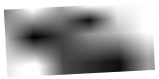	GVR/L	145-020B	1.45	2.8	0.2		●		●	○
			185-020B	1.85				●		●	○
			200-020B	2				●		●	○
			230-020B	2.3	3.2			●		●	○
			250-020B	2.5				●		●	○
			280-020B	2.8				●		●	○
			300-020B	3	4.2			●		●	○
			340-020B	3.4				●		●	○
			400-020B	4				●		●	○
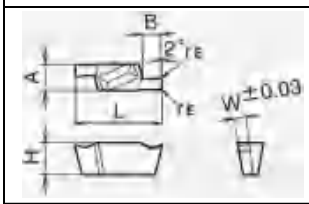		GVR/L	280-020C	2.8	4.5	0.2		●		●	○
			300-020C	3				●		●	○
			340-020C	3.4	5.5			●		●	○
			400-020C	4				●		●	○
			430-020C	4.3	6.3			●		●	○
			460-020C	4.6				●		●	○
			500-020C	5				●		●	○
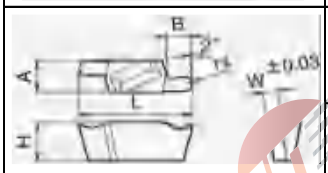		GVR/L	200-100AR	2	2.3	1		●		●	○
			250-125AR	2.5		1.3		●		●	○
			300-150AR	3		1.5		●		●	○
		GVR/L	200-100BR	2	3.2	1		●		●	○
			300-150BR	3	4.2	1.5		●		●	○

GVR-SS/S/A/B/C 刀杆

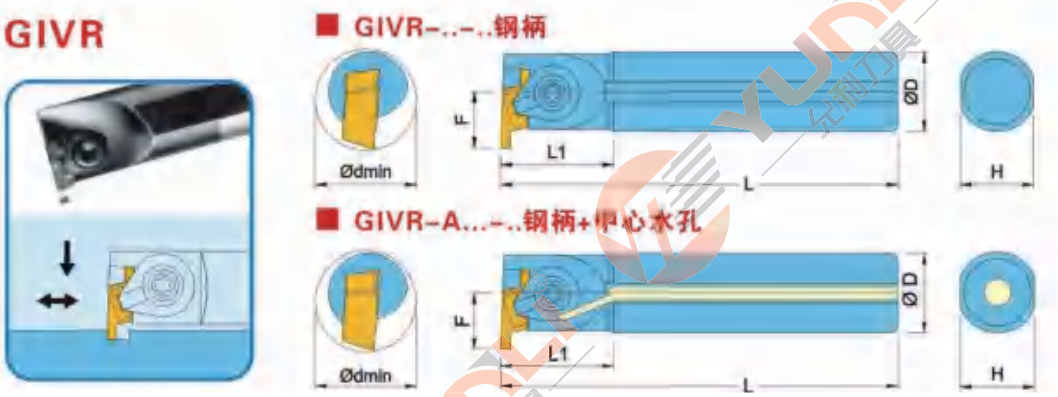

形状	型号		最小加工径	尺寸(mm)						零件				库存	
										押板组		扳手	扳手		
			ΦA	ΦD	H	L1	L2	F	T					R	L
	GIVR/L	1108K-1SS	11	8	7	125	20	6.0	2.2	CPS-4V	-	FT-10	-	●	●
		1116L-1SS	11	16	15	140	20	6.0	2.2	CPS-4V	-	FT-10	-	●	●
		1216-1SS	12	16	15	140	20	6.0	2.2	CPS-4V	-	FT-10	-	●	●
		1310K-1SS	13	10	9	125	25	6.0	2.2	CPS-4V	-	FT-10	-	●	●
		1316L-1S	13	16	15	140	25	6.0	2.2	CPS-4V	-	FT-10	-	●	●
		1420-1S	14	20	19	150	24	7.0	2.2	CPS-5F	-	FT-15	-	●	●
		1516L-1S	15	16	15	140	25	7.1	2.2	CPS-5F	-	FT-15	-	●	●
		1512M-1A	15	12	11	150	30	8.0	2.2	CPS-5F	-	FT-15	-	●	●
		1516-1A	15	16	15	150	25	8.0	2.2	CPS-5F	-	FT-15	-	●	●
		1620-1A	16	20	19	160	28	8.0	2.2	CPS-5V	-	FT-15	-	●	●
		2016Q-1A	20	16	15	180	35	9.0	2.2	CPS-5V	-	FT-15	-	●	●
		2020Q-2B	20	20	19	180	35	9.0	2.2	CPS-5V	-	FT-15	-	●	●
		2025-1B	20	25	23	180	35	10.0	2.8	CPS-5V	-	FT-15	-	●	●
		2025-2B	20	25	23	180	35	10.0	3.2	CPS-5V	-	FT-15	-	●	●
		2520R-1B	25	20	19	200	40	10.0	3.2	CPS-6V	-	FT-16	-	●	●
		2532-1C	25	32	30	200	43	12.5	4.5	-	CPS-6V	-	LW-3	●	●
		3225S-1C	32	25	23	250	40	12.5	4.5					●	●
		3232-1C	32	32	30	220	52	16.0	4.5					●	●
		4032-1C	40	32	30	250	43	21.0	4.5					●	●
		2532-2C	25	32	30	200	43	12.5	5.5					●	●
		3232-2C	32	32	30	220	52	16.0	5.5					●	●
		4032-2C	40	32	30	250	43	22.2	5.5					●	●
	GIVR/L	1412-1SE	14	12	11.4	150	18	7.7	1.7	CPS-5F	-	FT-15	-	●	●
		1612-1AE	16	12	11.4	150	19	8.2	2.2	CPS-5V	-	FT-15	-	●	●
		2016-1BE	20	16	15.2	180	20	11.2	2.8	CPS-5V	-	FT-15	-	●	●
		2016-2BE	20	16	15.2	180	19	11.7	3.2	CPS-5V	-	FT-15	-	●	●
		2520-1CE	25	20	19	200	25	14.5	4.5	-	CPS-6V	-	LW-3	●	●
		3225-1CE	32	25	24	220	24	17.5	4.5					●	●
		4032-1CE	40	32	31	240	29	21.0	4.5					●	●
		2720-2CE	27	20	19	200	25	16.2	5.5					●	●
		3225-2CE	32	25	24	220	24	18.7	5.5					●	●
		4032S-2CE	40	32	31	250	31							●	●
		4032-2CE	40	32	31	240	29	22.2	5.5					●	●
	GIVR/L	1616-1AW	16	16	15	175	48	10.6	2.2	CPS-5V	-	FT-15	-	●	●
		2020-1BW	20	20	19	220	60	14.6	2.8	CPS-5V	-	FT-15	-	●	●
		2020-2BW	20	20	19	220	60	14.6	3.2	CPS-5V	-	FT-15	-	●	●
		2525-1CW	25	25	24	260	70	19.1	4.5	-	CPS-6V	-	LW-3	●	●
		2525-2CW	25	25	24	260	70	19.1	5.5	-	CPS-6V	-	LW-3	●	●

内槽刀片 ML

型状	周途	CW及螺纹距 (mm)	型号	涂层	硬质合金	尺寸(mm)					
				UP20M	UTI20T	L	W1	PDPT	S	RE	BCH
		1.2	MLG1012L	●	●	7	5	1	2.38	-	0.1
		1.5	MLG1015L	●	●	7	5	1	2.38		
		2.0	MLG1020L	●	●	7	5	1	2.38		
		1.0	MLG1410L	●	●	7	5	1	2.38		
		1.5	MLG1415L	●	●	11.8	6.5	2	4.76	-	0.1
		2.0	MLG1420	●	●						
		3.0	MLG1430	●	●						
		2.0	MLG2020	●	●	16.8	9.03	3	6.35		
		3.0	MLG2030	●	●						
		4.0	MLG2040	●	●						
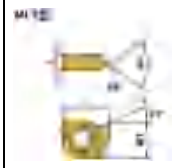		螺距1.5-2.0	MLT1001L	●	●	7	5	-	2.38	0.1	-
		螺距1.5-2.5	MLT1401L	●	●	11.8	6.5		7.76		
		螺距1.5-3.5	MLT2001L	●	●	16.8	9.03		6.35		

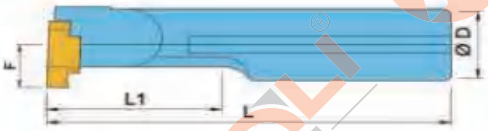

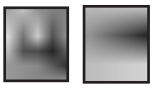

型号 Ordering Code	尺寸 DIMENSION(mm)					刀片 Insert		螺钉 Screw	板手 Wrench
	D	L	L1	F	dmin	槽加工	螺丝加工		
FSL5108R	8	125	25	4.8	10	MLG10**L	MLT10**L	MS2506A	TF9
FSL5110R	10	125	25	5.8	12				
FSL5112R	12	150	36	6.8	14	MLG14**L	MLT14**L	MS3008A	TF9
FSL5114R	14	150	36	7.8	16				
FSL5116R-14-D16	16	180	42	8	17				
FSL5116R	16	180	50	9.7	20	MLG20**L	MLT20**L	MS4011A	TF15
FSL5120R	20	200	50	11.7	24				

切槽刀片 T11N T16N E

形状	型号(Ordering Code)		尺寸 Dimension (mm)				材质 Grade recommended			
							Uncoated grade	PVC coating grade		Ceramic
The basic shape of inserts	Type(N内槽/E外槽)		T	S	L	r e	YL10	YL740	YL930	YL60
	T11N/ T11E	040	3.18	0.40	1.0	0.05	●		●	○
		050		0.50			●		●	○
		060		0.60			●		●	○
		070		0.70	1.2		●		●	○
		080		0.80			●		●	○
		090		1.90	1.5		●		●	○
		100		1.00			●		●	○
		110		1.10			●		●	○
		120		1.20		0.1	●		●	○
		130		1.30			●		●	○
		140		1.40			●		●	○
		150		1.50			●		●	○
		170		1.70	1.4		●		●	○
		180		1.80			●		●	○
		190		1.90	1.3		●		●	○
		200		2.00	1.2		●		●	○
	T16N/ T16E	033	3.65	0.33	1.0	0.05	●		●	○
		040		0.40			●		●	○
		045		0.45			●		●	○
		050		0.50			●		●	○
		055		0.55			●		●	○
		060		0.60			●		●	○
		065		0.65			●		●	○
		070		0.70	1.2		●		●	○
		075		0.75			●		●	○
		080		0.80			●		●	○
		085		0.85			●		●	○
		090		0.90			●		●	○
		095		0.95			●		●	○
		100		1.00	1.5		●		●	○
		105		1.05			●		●	○
		110		1.10			●		●	○
		115		1.15			●		●	○
		120		1.20		0.1	●		●	○
		125		1.25			●		●	○
		130		1.30			●		●	○
		135		1.35			●		●	○
		140		1.40			●		●	○
		145		1.45			●		●	○
		150		1.50			●		●	○
		155		1.55			●		●	○
		160		1.60	1.4		●		●	○
		165		1.65			●		●	○
		170		1.70			●		●	○
		175		1.75			●		●	○
		180		1.80	1.3		●		●	○
		185		1.85			●		●	○
		190		1.90			●		●	○
		195		1.95			●		●	○
		200		2.00	1.2		●		●	○
		205		2.05			●		●	○
		210		2.10			●		●	○
		215		2.15		0.2	●		●	○
		220		2.20			●		●	○
		225		2.25			●		●	○
		230		2.30			●		●	○
		235		2.35			●		●	○
		240		2.40			●		●	○
		245		2.45			●		●	○
		250		2.50			●		●	○
		255		2.55			●		●	○
		260		2.60			●		●	○
		265		2.65			●		●	○
		270		2.70			●		●	○
		275		2.75			●		●	○
		280		2.80			●		●	○
		285		2.85			●		●	○
		290		2.90			●		●	○
		295		2.95			●		●	○
		300		3.00			●		●	○

SNR/L 刀杆

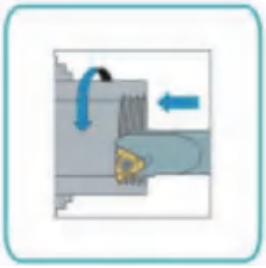

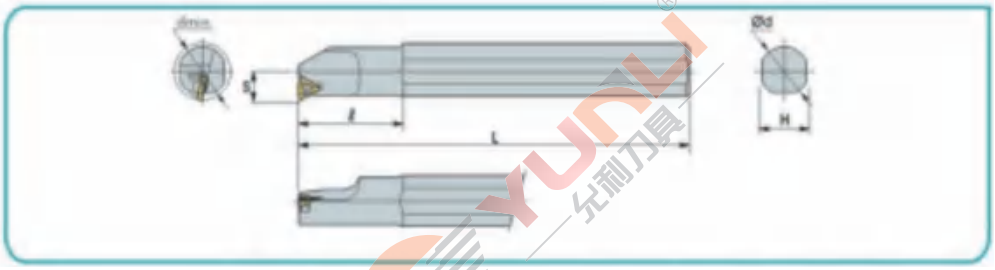

型状 The basic shape of inserts	型号 (Ordering Code)	尺寸(mm)						配件				库存	
		ΦD	L	S	Dmin	L2	H	刀垫	螺钉	螺钉	板手	R	L
	SNR/L 0010K11	10	125	7.3	13	25	9	-	M2.5*8	-	T-8	●	●
	SNR/L 0010K11 A16	16	125	7.3	13	30	15					●	
	SNR/L 0012K11	12	125	8.4	15	28	11					●	●
	SNR/L 0012K11-A16	16	125	8.4	15	36	15					●	●
	SNR/L 0013M16	16	150	10.3	17	32	15		M3.5*9		T-15	●	
	SNR/L 0016Q16	16	180	11.5	20	40	15					●	●
	SNR/L 0020Q16	20	180	13.4	24	40	18	STM16	M3.5*12	M3*6N	T-15	●	●
	SNR/L 0025R16	25	200	16.3	29	45	23					●	●
	SNR/L 0032S16	32	250	19.6	36	50	30					●	●
	SNR/L 0040T16	40	300	23.8	44	55	38					●	
	SNR/L 0050U16	50	350	28.7	56	60	48					●	

KIGBA内槽刀杆

型号		最小加工径ΦA	尺寸(mm)						零件		适用刀片	库存	
			ΦD	H	L1	L2	F	T	押板组	扳手		R	L
	S16N-TGFR/L16	20	16	20	160	25	-	-	LGBA-16L/RS	FT-15	TGF32L/R	●	●
	S20Q-KTGFR/L16	24	20	20	180	25						●	●
	S25R-KTGFR/L16	29	25	23	200	30						●	●
	S32S-KTGFR/L16	36	32	30	250	30						●	●
	S25R-KGBAR/L22	32	25	23	220	30	17.5	2.8	LGBA-16L/RS	FT-15	GBA43L/R型	●	●
	S32S-KGBAR/L22	38	32	30	250	30	23.0	3.0	CPS-5F	FT-15		●	●

型号		最小加工径ΦA	尺寸(mm)						零件				适用刀片	库存	
			ΦD	H	L1	L2	F	T	紧固螺钉		扳手			R	L
	KIGBAR/L3525T-16	35	25	23	220	18	17.5	-	SB-4TR	-	FT-15	-	GBA32L/R	●	●
	KIGBAR/L3525-16	35	25	23	220	30	17.5	2.8	LGBA-16L/RS	FT-15				●	●
	KIGBAR/L4032T-22	45	32	30	250	20	22.0	-	-	GS-50	-	LW-3	GBA43L/R	●	●
	KIGBAR/L4032-22	40	32	30	250	30	23.0	3.0	CPS-5F	FT-15				●	●

整体式内槽刀

- VNGR0410-11
- VNGR0610-11
- VNGR0410-11NB
- VNGR0610-11NB
- PSGR HPGR MGR MGL
- VNGR0420-11
- VNGR0620-11
- VNGR0420-11NB
- VNGR0620-11NB
- VNGR0510-11
- VNGR0510-11NB
- TGF32R/L 0.33-3.0刃宽
- VNGR0520-11
- VNGR0520-11NB
- GBA43R/L 050-4.8 刃宽

以上型号参数请参考分体式小径加工刀具系列L01-L05页

逗号深槽刀片

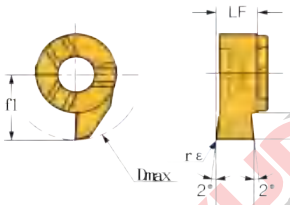

形状	型号	尺寸 Dimension (mm)					库存	
The basic shape of inserts	Type	W	T	f1	r ε	Dmax	YL740	YL10
	MB-07G100-00-10R	1.00	1.8	5.8	0	10	●	●
	MB-07G150-00-10R	1.50	1.8	5.8	0	10	●	●
	MB-07G200-00-10R	2.00	1.8	5.8	0	10	●	●
	MB-07G250-00-10R	2.50	1.8	5.8	0	10	●	●
	MB-07G300-00-10R	3.00	1.8	5.8	0	10	●	●
	MB-07G100-00-11R	1.00	2.8	6.8	0	11	○	○
	MB-07G150-00-11R	1.50	2.8	6.8	0	11	○	○
	MB-07G200-00-11R	2.00	2.8	6.8	0	11	○	○
	MB-07G250-00-11R	2.50	2.8	6.8	0	11	○	○
	MB-07G300-00-11R	3.00	2.8	6.8	0	11	○	○
	MB-07G100-00-12R	1.00	3.4	7.4	0	12	○	○
	MB-07G150-00-12R	1.50	3.4	7.4	0	12	○	○
	MB-07G200-00-12R	2.00	3.4	7.4	0	12	○	○
	MB-07G250-00-12R	2.50	3.4	7.4	0	12	○	○
	MB-07G300-00-12R	3.00	3.4	7.4	0	12	○	○
	MB-09GR100-00-13R	1.00	4	9	0	13	●	●
	MB-09GR150-00-13R	1.50	4	9	0	13	●	●
	MB-09GR200-00-13R	2.00	4	9	0	13	●	●
	MB-09GR250-00-13R	2.50	4	9	0	13	●	●
	MB-09GR300-00-13R	3.00	4	9	0	13	●	●
	MB-09GR100-00-16R	1.00	5.5	10.5	0	16	●	●
	MB-09GR150-00-16R	1.50	5.5	10.5	0	16	●	●
	MB-09GR200-00-16R	2.00	5.5	10.5	0	16	●	●
	MB-09GR250-00-16R	2.50	5.5	10.5	0	16	●	●
	MB-09GR300-00-16R	3.00	5.5	10.5	0	16	●	●
	MB-09GR100-00-17R	1.00	6.5	11.5	0	17	○	○
	MB-09GR150-00-17R	1.50	6.5	11.5	0	17	○	○
	MB-09GR200-00-17R	2.00	6.5	11.5	0	17	○	○
	MB-09GR250-00-17R	2.50	6.5	11.5	0	17	○	○
	MB-09GR300-00-17R	3.00	6.5	11.5	0	17	○	○

订货示例：MB-07G150-00-10R YL740　接受非标定制　　● 为标准库存　○ 为非标准库存

逗号深槽刀片

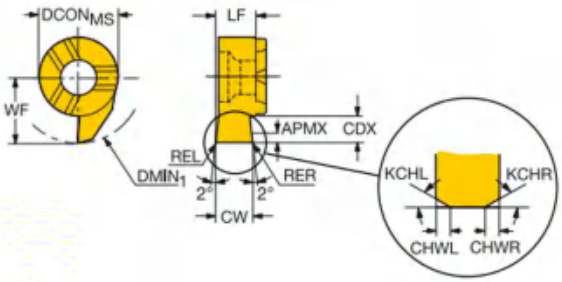

									尺寸，mm					
CZGMS	CW	KCHL	KCHR	CHWL	CHWR	CDX	DMIN1	订货号	DCONMS	LF	WF	YL10	YL740	YL930
07	0.73	45°	45°	0.04	0.04	1.2	10.0	MB-07G070-00-10R/L	7	3.8	5.8	●	●	○
07	0.83	45°	45°	0.04	0.04	1.3	10.0	MB-07G080-00-10R/L	7	3.8	5.8	●	●	○
07	0.93	45°	45°	0.04	0.04	1.5	10.0	MB-07G090-00-10R/L	7	3.8	5.8	●	●	○
07	1.20	45°	45°	0.04	0.04	1.8	10.0	MB-07G120-00-10R/L	7	3.9	5.8	●	●	○
07	1.40	45°	45°	0.04	0.04	1.8	10.0	MB-07G140-00-10R/L	7	3.9	5.8	●	●	○
07	1.70	45°	45°	0.04	0.04	1.8	10.0	MB-07G170-00-10R/L	7	3.9	5.8	●	●	○
09	0.73	45°	45°	0.04	0.04	1.2	14.0	MB-09G070-00-14R/L	9	5.2	9.0	●	●	○
09	0.83	45°	45°	0.04	0.04	1.3	14.0	MB-09G080-00-14R/L	9	5.2	9.0	●	●	○
09	0.93	45°	45°	0.04	0.04	1.5	14.0	MB-09G090-00-14R/L	9	5.2	9.0	●	●	○
09	1.20	45°	45°	0.04	0.04	4.0	14.0	MB-09G120-00-14R/L	9	5.3	9.0	●	●	○
09	1.40	45°	45°	0.04	0.04	4.0	14.0	MB-09G140-00-14R/L	9	5.3	9.0	●	●	○
09	1.70	45°	45°	0.04	0.04	4.0	14.0	MB-09G170-00-14R/L	9	5.3	9.0	●	●	○

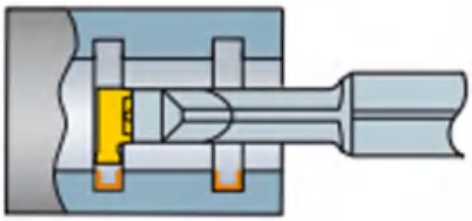

YUNLI 允利刀具

逗号深槽刀片

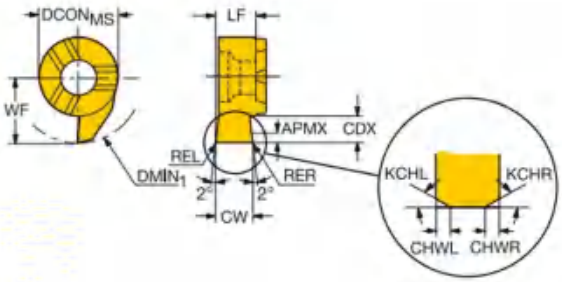

CZGMS	CW	REL	RER	KCHL	KCHR	CHWL	CHWR	CDX	DMIN1	订货号	尺寸，mm DCONMS	LF	WF	YL10	YL740	YL930
09	1.00			45°	45°	0.04	0.04	4.0	14.0	MB-09G100-00-14L	9	5.2	9.0	●	●	○
09	1.00			45°	45°	0.04	0.04	4.0	14.0	MB-09G100-00-14R	9	5.2	9.0	●	●	○
09	1.50			45°	45°	0.04	0.04	4.0	14.0	MB-09G150-00-14L	9	5.3	9.0	●	●	○
09	1.50			45°	45°	0.04	0.04	4.0	14.0	MB-09G150-00-14R	9	5.3	9.0	●	●	○
09	1.50			45°	45°	0.04	0.04	5.5	16.0	MB-09G150-00-16L	9	5.2	10.5	●	●	○
09	1.50			45°	45°	0.04	0.04	5.5	16.0	MB-09G150-00-16R	9	5.2	10.5	●	●	○
09	1.50			45°	45°	0.04	0.04	6.5	17.0	MB-09G150-00-17L	9	5.2	11.5	●	●	○
09	1.50			45°	45°	0.04	0.04	6.5	17.0	MB-09G150-00-17R	9	5.2	11.5	●	●	○
09	1.50	0.20	0.20					4.0	16.0	MB-09G150-02-16L	9	5.3	9.0	●	●	○
09	1.50	0.20	0.20					4.0	16.0	MB-09G150-02-16R	9	5.3	9.0	●	●	○
09	2.00			45°	45°	0.04	0.04	4.0	14.0	MB-09G200-00-14L	9	5.3	9.0	●	●	○
09	2.00			45°	45°	0.04	0.04	4.0	14.0	MB-09G200-00-14R	9	5.3	9.0	●	●	○
09	2.00			45°	45°	0.04	0.04	5.5	16.0	MB-09G200-00-16L	9	5.2	10.5	●	●	○
09	2.00			45°	45°	0.04	0.04	5.5	16.0	MB-09G200-00-16R	9	5.2	10.5	●	●	○
09	2.00			45°	45°	0.04	0.04	6.5	17.0	MB-09G200-00-17L	9	5.2	11.5	●	●	○
09	2.00			45°	45°	0.04	0.04	6.5	17.0	MB-09G200-00-17R	9	5.2	11.5	●	●	○
09	2.00	0.20	0.20					4.0	14.0	MB-09G200-02-14L	9	5.3	9.0	●	●	○
09	2.00	0.20	0.20					4.0	14.0	MB-09G200-02-14R	9	5.3	9.0	●	●	○
09	2.00	0.20	0.20					5.5	16.0	MB-09G200-02-16L	9	5.2	10.5	●	●	○
09	2.00	0.20	0.20					5.5	16.0	MB-09G200-02-16R	9	5.2	10.5	●	●	○
09	2.50			45°	45°	0.04	0.04	4.0	14.0	MB-09G250-00-14L	9	5.3	9.0	●	●	○
09	2.50			45°	45°	0.04	0.04	4.0	14.0	MB-09G250-00-14R	9	5.3	9.0	●	●	○
09	2.50			45°	45°	0.04	0.04	5.5	16.0	MB-09G250-00-16L	9	5.2	10.5	●	●	○
09	2.50			45°	45°	0.04	0.04	5.5	16.0	MB-09G250-00-16R	9	5.2	10.5	●	●	○
09	2.50			45°	45°	0.04	0.04	6.5	17.0	MB-09G250-00-17L	9	5.2	11.5	●	●	○
09	2.50			45°	45°	0.04	0.04	6.5	17.0	MB-09G250-00-17R	9	5.2	11.5	●	●	○
09	2.50	0.20	0.20					5.5	16.0	MB-09G250-02-16L	9	5.2	10.5	●	●	○
09	2.50	0.20	0.20					5.5	16.0	MB-09G250-02-16R	9	5.2	10.5	●	●	○
09	3.00			45°	45°	0.04	0.04	4.0	14.0	MB-09G300-00-14L	9	5.3	9.0	●	●	○
09	3.00			45°	45°	0.04	0.04	4.0	14.0	MB-09G300-00-14R	9	5.3	9.0	●	●	○
09	3.00			45°	45°	0.04	0.04	5.5	16.0	MB-09G300-00-16L	9	5.2	10.5	●	●	○
09	3.00			45°	45°	0.04	0.04	5.5	16.0	MB-09G300-00-16R	9	5.2	10.5	●	●	○
09	3.00			45°	45°	0.04	0.04	6.5	17.0	MB-09G300-00-17L	9	5.2	11.5	●	●	○
09	3.00			45°	45°	0.04	0.04	6.5	17.0	MB-09G300-00-17R	9	5.2	11.5	●	●	○
09	3.00	0.20	0.20					5.5	16.0	MB-09G300-02-16L	9	5.2	10.5	●	●	○
09	3.00	0.20	0.20					5.5	16.0	MB-09G300-02-16R	9	5.2	10.5	●	●	○
09	3.18			45°	45°	0.04	0.04	4.0	14.0	MB-09G318-00-14L	9	5.3	9.0	●	●	○
09	3.18			45°	45°	0.04	0.04	4.0	14.0	MB-09G318-00-14R	9	5.3	9.0	●	●	○
09	3.18	0.20	0.20					4.0	14.0	MB-09G318-02-14L	9	5.3	9.0	●	●	○
09	3.18	0.20	0.20					4.0	14.0	MB-09G318-02-14R	9	5.3	9.0	●	●	○

逗号深槽刀杆

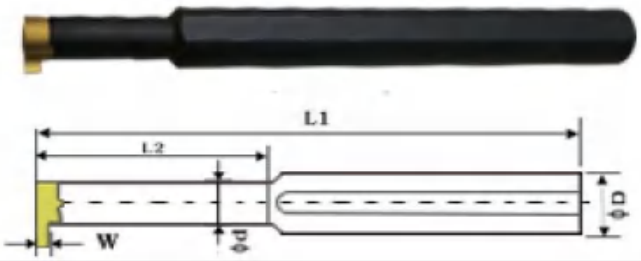

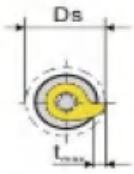

形状	刀杆型号	尺寸（mm）				配件			库存	
		L1	L2	D	d	刀片型号	螺钉	扳手	R	L
	MB-S12-24-07R	125	24	12	7.4	MB-07G	M4	T15		
	MB-S16-24-07R	150	24	16	9.5					
	MB-S20-24-07R	150	24	20	11					
	MB-S12-28-09R	125	28	12	9.5	MB-09G	M4	T15		
	MB-S16-30-09R	150	30	16	9.5					
	MB-S20-30-09R	150	30	20	11					
	MG槽刀杆可适用于CNC车削、铣削加工　注：非标准库存产品可定制									
	（有效槽深可达6.5mm，适用于直径13以上的小内孔深槽加工）									

MB-05G/11G内槽刀片

形状 The basic shape of inserts	型号 Type	尺寸 Dimension (mm)					牌号	
		B	r	f1	a	Dmax	YL740	YL10
 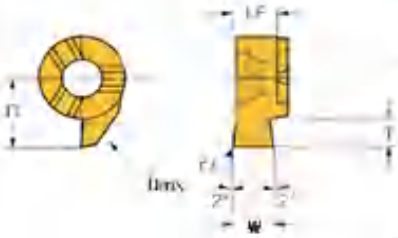	MB-05G100-00-08R	1.0	2.3	5.3	0	8	●	●
	MB-05G150-00-08R	1.5	2.3	5.3	0	8	●	●
	MB-05G200-00-08R	2.0	2.3	5.3	0	8	●	●
	MB-05G100-00-09R	1.0	2.8	5.8	0	9	●	●
	MB-05G150-00-09R	1.5	2.8	5.8	0	9	●	●
	MB-05G200-00-09R	2.0	2.8	5.8	0	9	●	●
	MB-11G150-02-20R	1.5	8.0	14	0.2	20	●	●
	MB-11G200-02-20R	2.0	8.0	14	0.2	20	●	●
	MB-11G250-02-20R	2.5	8.0	14	0.2	20	●	●
	MB-11G300-02-20R	3.0	8.0	14	0.2	20	●	●
	MB-11G350-02-20R	3.5	8.0	14	0.2	20	●	●
	MB-11G400-02-20R	4.0	8.0	14	0.2	20	●	●

MB系列内槽刀杆

形状	刀杆型号	尺寸（mm）				配件		
		L1	L2	D	d	刀片型号	螺钉	扳手
	MB-S10-15-05R	100	15	10	–	MB-05G	M4*10	T15
	MB-S12-15-05R	125	15	12	–	MB-05G	M4*10	T15
	MB-S16-15-05R	150	15	16	–	MB-05G	M4*10	T15
	MB-S16-30-11R	150	30	16	–	MB-11G	M4*10	T15
	MB-S20-30-11R	150	30	20	–	MB-11G	M4*10	T15
	MB-S25-30-11R	150	30	25	–	MB-11G	M4*10	T15

GFQR

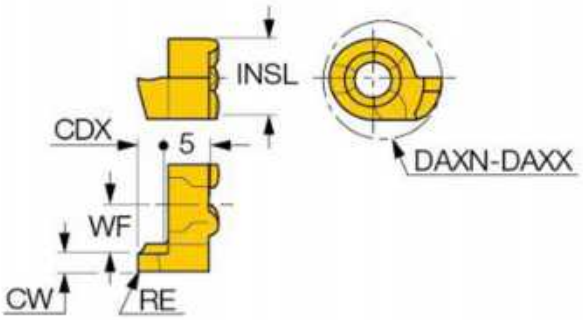

尺寸（mm）											型号			
CW	RE	CWTOL	RETOL	CDX	DAXN	DAXX	WF	INSL	ffg (min)	ffg (max)		YL10	YL740	YL930
1.00	0.05	0.020	0.030	1.50	3.00	16.0	5.50	9.00	0.01	0.04	GFQR 12-1.00-0.05	●	●	○
1.50	0.20	0.020	0.030	2.50	3.00	17.0	5.50	9.00	0.01	0.04	GFQR 12-1.50-0.20	●	●	○
2.00	0.20	0.020	0.030	3.00	3.00	18.0	5.50	9.00	0.02	0.05	GFQR 12-2.00-0.20	●	●	○
2.50	0.20	0.020	0.030	3.00	3.00	19.0	5.50	9.00	0.02	0.05	GFQR 12-2.50-0.20	●	●	○

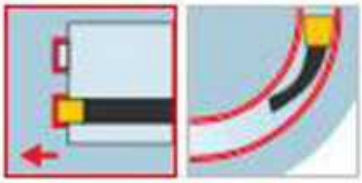

MB-07螺纹刀片

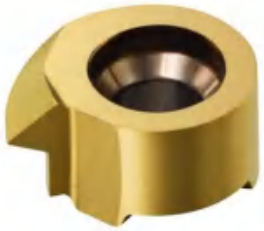

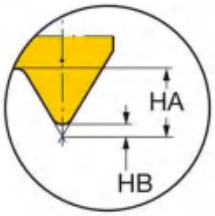

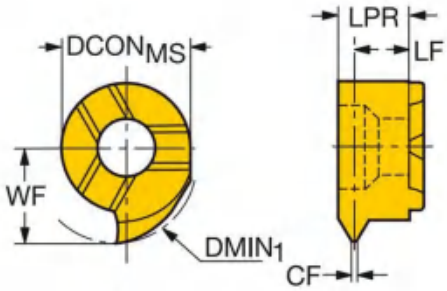

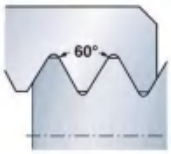

						型号	尺寸，mm									
CZC$_{ISO}$	TPN	TPX	TPIN	TPIX	DMIN$_1$		DCON$_{MS}$	CF	LPR	LF	WF	HA	HB	YL10	YL740	YL930
07	0.50	0.75	34.0	51.0	10.0	MB-07TH050VM-10R	7	0.1	3.8	3.4	5.8	0.5	0.1	●	●	○
07	1.00	1.25	20.0	25.0	10.0	MB-07TH100VM-10R	7	0.1	3.8	3.2	5.8	0.8	0.1	●	●	○
07	1.50	1.75	12.0	17.0	10.0	MB-07TH150VM-10R	7	0.2	3.8	3.0	5.8	1.1	0.2	●	●	○
07	2.00	2.50	10.0	13.0	10.0	MB-07TH200VM-10R	7	0.3	3.8	2.8	5.8	1.6	0.2	●	●	○
07	2.50	3.00	8.0	10.0	10.0	MB-07TH250VM-10R	7	0.3	3.8	2.6	5.8	2.0	0.3	●	●	○

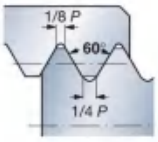

			型号	尺寸，mm									
CZC$_{ISO}$	TP	DMIN$_1$		DCON$_{MS}$	CF	LPR	LF	WF	HA	HB	YL10	YL740	YL930
07	0.5	10.0	MB-07TH050MM-10R	7	0.1	3.8	3.4	5.8	0.5	0.1	●	●	○
07	1.0	10.0	MB-07TH100MM-10R	7	0.1	3.8	3.2	5.8	0.9	0.1	●	●	○
07	1.5	10.0	MB-07TH150MM-10R	7	0.2	3.8	3.0	5.8	1.4	0.2	●	●	○
07	1.8	10.0	MB-07TH175MM-10R	7	0.2	3.8	2.9	5.8	1.1	0.2	●	●	○
07	2.0	10.0	MB-07TH200VM-10R	7	0.3	3.8	2.8	5.8	1.3	0.2	●	●	○

MB-07内槽刀片

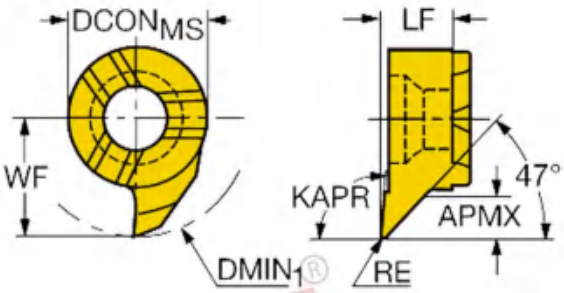

				型号	尺寸，mm						
RE	APMX	OHX	DMIN1		DCONMS	LF	WF	HF	YL10	YL740	YL930
0.2	1.80	3.90	10.0	MB-07TE93-02-10R	7	3.9	5.8	0.0	●	●	○

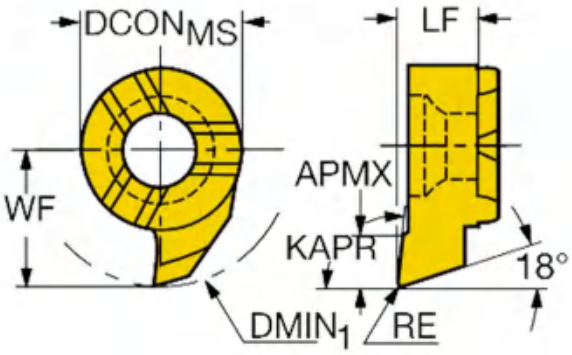

				型号	尺寸，mm						
RE	APMX	OHX	DMIN1		DCONMS	LF	WF	HF	YL10	YL740	YL930
0.2	1.80	3.90	10.0	MB-07T093-02-10R	7	3.9	5.8	0.0	●	●	○

MB-09FA/B端面切槽刀片

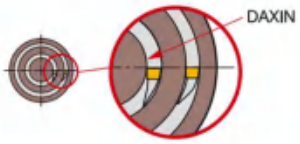

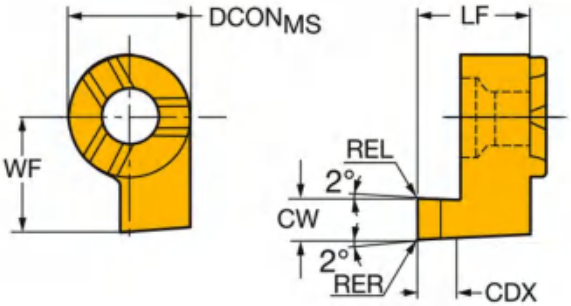

A 曲线

CZC	CW	REL	RER	KCHL	KCHR	CHWL	CDX	DAXIN	OHN	型号	DCONMS	LF	WF	CWTOLL	CWTOLU	RETOLL	RETOLU	YL10	YL740	YL930
											尺寸，mm									
09	1.00			45°	45°	0.4	1.5	12.0		MB-09FA100-00-14R	9	8.3	9.0	0.000	0.050			●	●	○
09	1.50	0.20	0.20				2.5	11.0		MB-09FA150-02-14R	9	8.3	9.0	0.000	0.050	-0.02	0.02	●	●	○
09	2.00	0.20	0.20				5.0	10.0		MB-09FA200-02-14R	9	10.3	9.0	0.000	0.050	-0.02	0.02	●	●	○
09	2.50	0.20	0.20				5.0	9.0		MB-09FA250-02-14R	9	10.3	9.0	0.000	0.050	-0.02	0.02	●	●	○
09	3.00	0.20	0.20				5.0	8.0		MB-09FA300-02-14R	9	10.3	9.0	0.000	0.050	-0.02	0.02	●	●	○

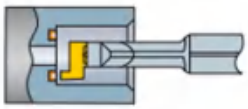

B 曲线

CZC	CW	REL	RER	KCHL	KCHR	CHWL	CDX	DAXIN	OHN	型号	DCONMS	LF	WF	CWTOLL	CWTOLU	RETOLL	RETOLU	YL10	YL740	YL930
											尺寸，mm									
09	1.00			45°	45°	0.4	1.5	10.0		MB-09FB100-00-14R	9	8.3	7.0	0.000	0.050			●	●	○
09	1.50	0.20	0.20				2.5	9.0		MB-09FB150-02-14R	9	8.3	7.5	0.000	0.050	-0.02	0.02	●	●	○
09	2.00	0.20	0.20				5.0	8.0		MB-09FB200-02-14R	9	10.3	8.0	0.000	0.050	-0.02	0.02	●	●	○
09	2.50	0.20	0.20				5.0	7.0		MB-09FB250-02-14R	9	10.3	8.5	0.000	0.050	-0.02	0.02	●	●	○
09	3.00	0.20	0.20				5.0	6.0		MB-09FB300-02-14R	9	10.3	9.0	0.000	0.050	-0.02	0.02	●	●	○

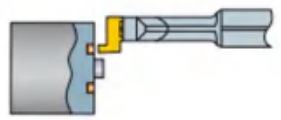

MB-09FA/B刀杆

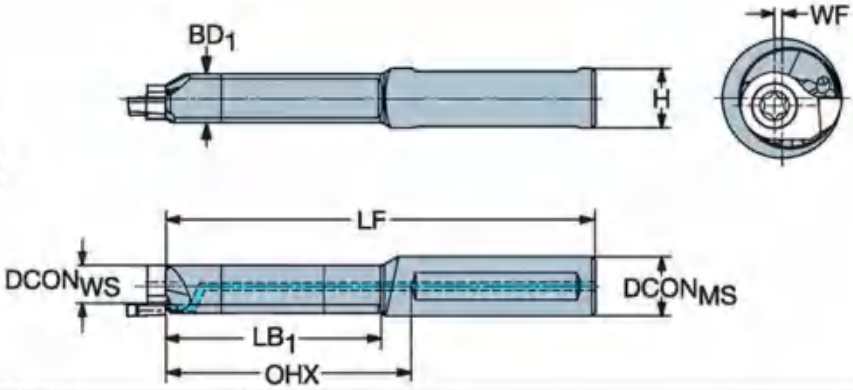

OHN	OHX	DCONMS	DCONWS	HAND	型号	尺寸，mm H	LF	WF	HF	BD	LB
30.7	30.70	12.70	9.0	N	MB-A0625-08-09	11.7	94.7	10.0	0	10.0	28.7
18.0	18.00	15.88	9.0	N	MB-E0500-13-09	14.9	94.7	10.0	0	10.0	14.7
41.7	41.70	12.70	9.0	N	MB-E0500-17-09	11.7	104.7	10.0	0	10.0	39.7
60.7	60.70	12.70	9.0	N	MB-E0500-25-09	11.7	124.7	10.0	0	10.0	58.7
30.7	60.70	15.88	9.0	N	MB-E0625-25-09	14.9	124.7	10.0	0	10.0	58.7
40.2	40.2	15.875	9.0	R	MB-E0625R-16-09	14.875	94.7	-1.0	0	13.0	36.7
30.1	30.10	15.88	9.0	R	MB-E0625R-23-09	14.875	114.7	-1.0	0	13.0	56.7
42.0	42.00	16.00	9.0	R	MB-E16R-42-09	15	94.8	-1.0	0	13.0	36.7
60.0	60.00	16.00	9.0	R	MB-E16R-60-09	15	114.8	-1.0	0	13.0	56.7

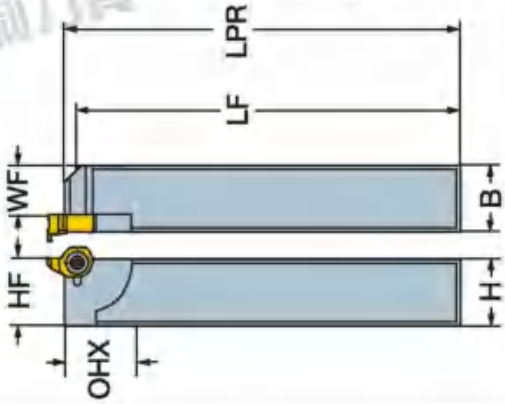

OHX	DCONWS	HAND	型号	尺寸，mm B	H	LPR	LF	WF	HF
20.0	9.0	L	MBG-08A-09L	12.700	12.700	100.0	95.5	15.80	12.700
20.0	9.0	R	MBG-08A-09R	12.700	12.700	100.0	95.5	15.80	12.700
20.0	9.0	L	MBG-10C-09L	15.875	15.875	120.0	115.5	18.97	15.875
20.0	9.0	R	MBG-10C-09R	15.875	15.875	120.0	115.5	18.97	15.875
20.0	9.0	L	MBG-1212-09L	12.000	12.000	100.0	95.5	15.10	12.000
20.0	9.0	R	MBG-1212-09R	12.000	12.000	100.0	95.5	15.10	12.000
20.0	9.0	L	MBG-12C-09L	19.050	19.050	120.0	115.5	22.15	19.050
20.0	9.0	R	MBG-12C-09R	19.050	19.050	120.0	115.5	22.15	19.050
20.0	9.0	L	MBG-1616-09L	16.000	16.000	120.0	115.5	19.10	16.000
20.0	9.0	R	MBG-1616-09R	16.000	16.000	120.0	115.5	19.10	16.000
20.0	9.0	L	MBG-16D-09L	25.400	25.400	150.0	145.5	28.50	25.400
20.0	9.0	R	MBG-16D-09R	25.400	25.400	150.0	145.5	28.50	25.400
20.0	9.0	L	MBG-2020-09L	20.000	20.000	120.0	115.5	23.10	20.000
20.0	9.0	R	MBG-2020-09R	20.000	20.000	120.0	115.5	23.10	20.000
20.0	9.0	L	MBG-2525-09L	25.000	25.000	150.0	145.5	28.10	25.000
20.0	9.0	R	MBG-2525-09R	25.000	25.000	150.0	145.5	28.10	25.000

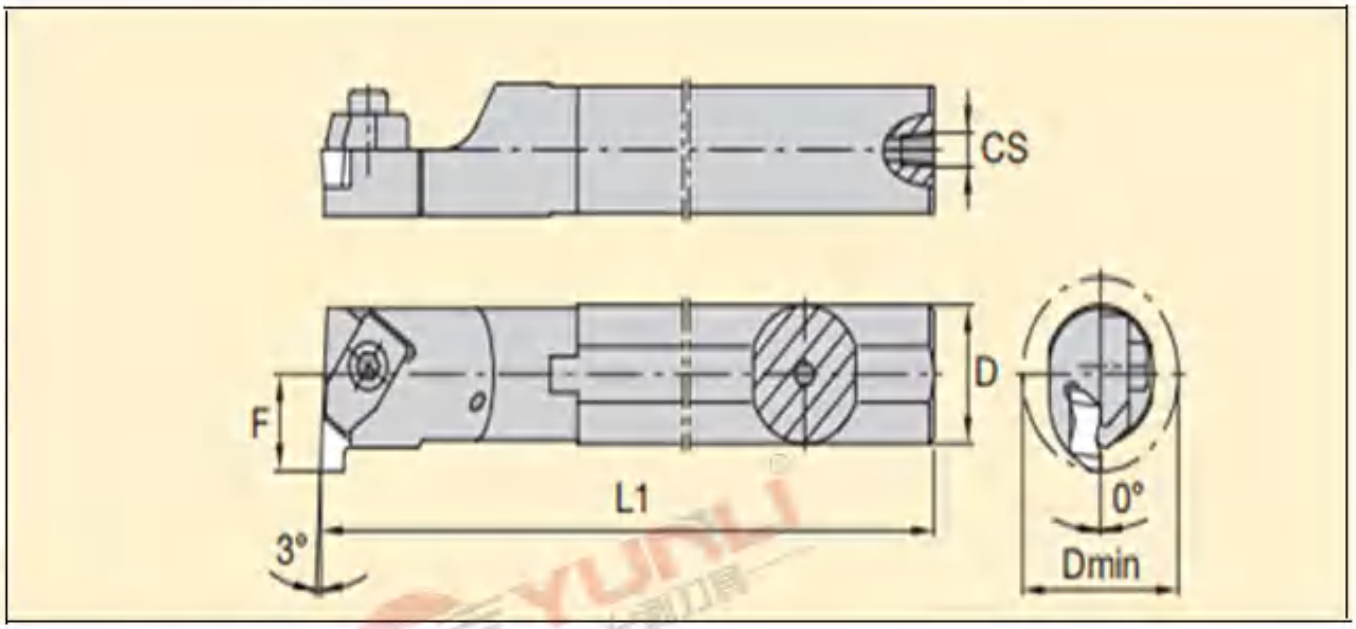

NNTOR内径切槽刀杆

刀片规格	样本代码	Dmin*	D	L1	F	A	CS	压板	压板螺钉	扳手规格
	右手									
N.2L	A12MNNTOR2	18,5	12	150	11	-	1/16-27 NPT	CM147	MS1025	2,5
N.2L	A16MNNTOR2	22	16	150	11	-	1/8-27 NPT	CM75	MS1025	2,5
N.2L	A20QNNTOR2	26	20	180	13	-	1/8-27 NPT	CM75	MS1025	2,5
N.2L	A25RNNTOR2	34	25	200	17	-	1/4-18 NPT	CM75	MS1025	2,5
N.3L	A25RNNTOR3	34	25	200	17	-	1/4-18 NPT	CM73LP	MS2111	25 IP
N.3L	A32SNNTOR3	44	32	250	22	-	1/4-18 NPT	CM73LP	MS2111	25 IP
N.3L	A40TNNTOR3	54	40	300	27	-	1/4-18 NPT	CM73LP	MS2111	25 IP
N.4L	A40TNNTOR4	54	40	300	27	-	1/4-18 NPT	CM73LP	MS2111	25 IP
N.4L	A50UNNTOR4	70	50	350	35	-	1/4-18 NPT	CM73LP	MS2111	25 IP
	左手									
N.2R	A12MNNTOL2	18,5	12	150	11	-	1/16-27 NPT	CM146	MS1025	2,5
N.2R	A16MNNTOL2	22	16	150	11	-	1/8-27 NPT	CM74	MS1025	2,5
N.2R	A20QNNTOL2	26	20	180	13	-	1/8-27 NPT	CM74	MS1025	2,5
N.2R	A25RNNTOL2	34	25	200	17	-	1/4-18 NPT	CM74	MS1025	2,5
N.3R	A25RNNTOL3	34	25	200	17	-	1/4-18 NPT	CM72LP	MS2111	25 IP
N.3R	A32SNNTOL3	44	32	250	22	-	1/4-18 NPT	CM72LP	MS2111	25 IP
N.3R	A40TNNTOL3	54	40	300	27	-	1/4-18 NPT	CM72LP	MS2111	25 IP
N.4R	A40TNNTOL4	54	40	300	27	-	1/4-18 NPT	CM72LP	MS2111	25 IP
N.4R	A50UNNTOL4	70	50	350	35	-	1/4-18 NPT	CM72LP	MS2111	25 IP

327R12三刃旋风铣刀

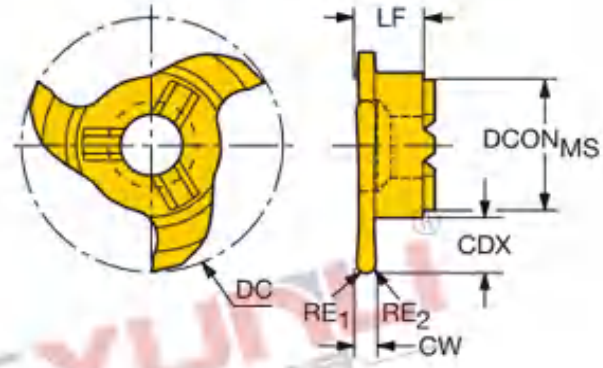

尺寸：mm

CW	RE_1	RE_2	CZC_{MS}	CDX	ZEFP	型号	$DCON_{MS}$	DC	LF	CWTOLL	CWTOLU	RPMX	YL10	YL740	YL930
1.50	0.20	0.20	12.0	4.5	3	327R12-22 15002-GM	12.00	21.70	5.70	0.000	0.020	50000	●	●	○
2.00	0.20	0.20	12.0	4.5	3	327R12-22 20002-GM	12.00	21.70	5.70	0.000	0.020	50000	●	●	○
2.50	0.20	0.20	12.0	4.5	3	327R12-22 25002-GM	12.00	21.70	5.70	0.000	0.020	50000	●	●	○
3.00	0.20	0.20	12.0	4.5	3	327R12-22 30002-GM	12.00	21.70	5.70	0.000	0.020	50000	●	●	○
4.00	0.20	0.20	12.0	4.5	3	327R12-22 40002-GM	12.00	21.70	5.70	0.000	0.020	50000	●	●	○
1.60	0.00	0.00	12.0	4.5	3	327R12-22 16000-GM	12.00	21.70	5.70	0.090	0.110	50000	●	●	○
1.85	0.15	0.15	12.0	4.5	3	327R12-22 18502-GM	12.00	21.70	5.70	0.090	0.110	50000	●	●	○
2.15	0.20	0.20	12.0	4.5	3	327R12-22 21502-GM	12.00	21.70	5.70	0.090	0.110	50000	●	●	○
2.65	0.15	0.15	12.0	4.5	3	327R12-22 26502-GM	12.00	21.70	5.70	0.090	0.110	50000	●	●	○
3.15	0.15	0.15	12.0	4.5	3	327R12-22 31502-GM	12.00	21.70	5.70	0.090	0.110	50000	●	●	○
4.15	0.15	0.15	12.0	4.5	3	327R12-22 41502-GM	12.00	21.70	5.70	0.090	0.110	50000	●	●	○
5.15	0.15	0.15	12.0	4.5	3	327R12-22 51502-GM	12.00	21.70	5.70	0.090	0.110	50000	●	●	○
1.00	0.50	0.50	12.0	4.5	3	327R12-22 10005-RM	12.00	21.70	5.75	0.000	0.030	50000	●	●	○
2.00	1.00	1.00	12.0	4.5	3	327R12-22 20010-RM	12.00	21.70	5.75	0.000	0.030	50000	●	●	○
3.00	1.50	1.50	12.0	4.5	3	327R12-22 30015-RM	12.00	21.70	5.75	0.000	0.030	50000	●	●	○
4.00	2.00	2.00	12.0	4.5	3	327R12-22 40020-RM	12.00	21.70	5.75	0.000	0.030	50000	●	●	○

327R06三刃旋风铣刀

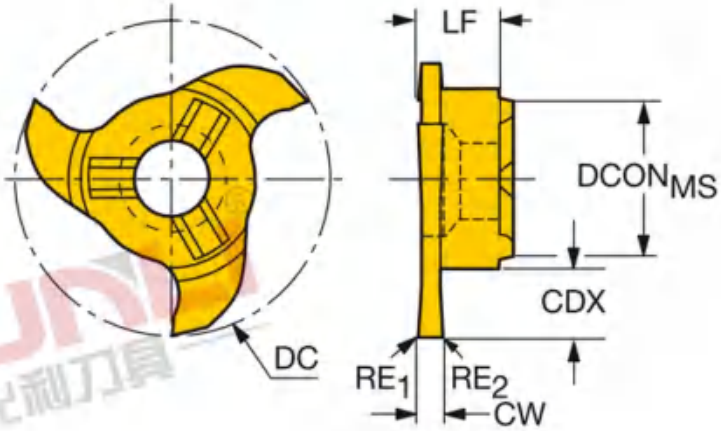

CW	RE$_1$	RE$_2$	CZC$_{MS}$	CDX	ZEFP	型号	尺寸, DCON$_{MS}$	DC	LF	CWTOLL	CWTOLU	RPMX	YL10	YL740	YL930
1.00	0.10	0.10	6.00	1.50	3.00	327R06-10 10001-GM	6.00	9.70	3.50	0.00	0.02	50000	●	●	○
1.10	0.10	0.10	6.00	1.50	3.00	327R06-10 11001-GM	6.00	9.70	3.50	0.00	0.02	50000	●	●	○
1.20	0.10	0.10	6.00	1.50	3.00	327R06-10 12001-GM	6.00	9.70	3.50	0.00	0.02	50000	●	●	○
1.30	0.20	0.20	6.00	1.50	3.00	327R06-10 13002-GM	6.00	9.70	3.50	0.00	0.02	50000	●	●	○
1.40	0.20	0.20	6.00	1.50	3.00	327R06-10 14002-GM	6.00	9.70	3.50	0.00	0.02	50000	●	●	○
1.50	0.20	0.20	6.00	1.50	3.00	327R06-10 15002-GM	6.00	9.70	3.50	0.00	0.02	50000	●	●	○
1.60	0.20	0.20	6.00	1.50	3.00	327R06-10 16002-GM	6.00	9.70	3.50	0.00	0.02	50000	●	●	○
1.70	0.20	0.20	6.00	1.50	3.00	327R06-10 17002-GM	6.00	9.70	3.50	0.00	0.02	50000	●	●	○
1.80	0.20	0.20	6.00	1.50	3.00	327R06-10 18002-GM	6.00	9.70	3.50	0.00	0.02	50000	●	●	○
1.90	0.20	0.20	6.00	1.50	3.00	327R06-10 19002-GM	6.00	9.70	3.50	0.00	0.02	50000	●	●	○
2.00	0.20	0.20	6.00	1.50	3.00	327R06-10 20002-GM	6.00	9.70	3.50	0.00	0.02	50000	●	●	○
2.10	0.20	0.20	6.00	1.50	3.00	327R06-10 21002-GM	6.00	9.70	3.50	0.00	0.02	50000	●	●	○
2.20	0.20	0.20	6.00	1.50	3.00	327R06-10 22002-GM	6.00	9.70	3.50	0.00	0.02	50000	●	●	○
2.30	0.20	0.20	6.00	1.50	3.00	327R06-10 23002-GM	6.00	9.70	3.50	0.00	0.02	50000	●	●	○
2.40	0.20	0.20	6.00	1.50	3.00	327R06-10 24002-GM	6.00	9.70	3.50	0.00	0.02	50000	●	●	○
2.50	0.20	0.20	6.00	1.50	3.00	327R06-10 25002-GM	6.00	9.70	3.50	0.00	0.02	50000	●	●	○
2.60	0.20	0.20	6.00	1.50	3.00	327R06-10 26002-GM	6.00	9.70	3.50	0.00	0.02	50000	●	●	○
2.70	0.20	0.20	6.00	1.50	3.00	327R06-10 27002-GM	6.00	9.70	3.50	0.00	0.02	50000	●	●	○
2.80	0.20	0.20	6.00	1.50	3.00	327R06-10 28002-GM	6.00	9.70	3.50	0.00	0.02	50000	●	●	○
2.90	0.20	0.20	6.00	1.50	3.00	327R06-10 29002-GM	6.00	9.70	3.50	0.00	0.02	50000	●	●	○
3.00	0.20	0.20	6.00	1.50	3.00	327R06-10 30002-GM	6.00	9.70	3.50	0.00	0.02	50000	●	●	○

327R06三刃旋风铣刀

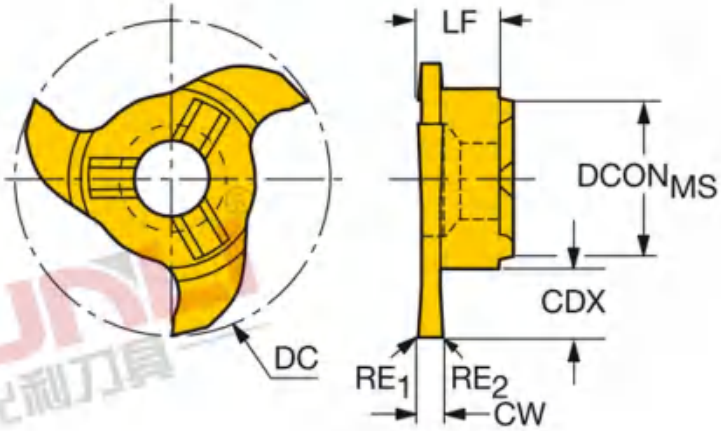

CW	RE$_1$	RE$_2$	CZC$_{MS}$	CDX	ZEFP	型号	尺寸, DCON$_{MS}$	DC	LF	CWTOLL	CWTOLU	RPMX	YL10	YL740	YL930
1.00	0.10	0.10	6.00	1.50	3.00	327R06-12 10001-GM	6.00	9.70	3.50	0.00	0.02	50000	●	●	○
1.10	0.10	0.10	6.00	1.50	3.00	327R06-12 11001-GM	6.00	9.70	3.50	0.00	0.02	50000	●	●	○
1.20	0.10	0.10	6.00	1.50	3.00	327R06-12 12001-GM	6.00	9.70	3.50	0.00	0.02	50000	●	●	○
1.30	0.10	0.10	6.00	1.50	3.00	327R06-12 13001-GM	6.00	9.70	3.50	0.00	0.02	50000	●	●	○
1.40	0.20	0.20	6.00	1.50	3.00	327R06-12 14002-GM	6.00	9.70	3.50	0.00	0.02	50000	●	●	○
1.50	0.20	0.20	6.00	1.50	3.00	327R06-12 15002-GM	6.00	9.70	3.50	0.00	0.02	50000	●	●	○
1.60	0.20	0.20	6.00	1.50	3.00	327R06-12 16002-GM	6.00	9.70	3.50	0.00	0.02	50000	●	●	○
1.70	0.20	0.20	6.00	1.50	3.00	327R06-12 17002-GM	6.00	9.70	3.50	0.00	0.02	50000	●	●	○
1.80	0.20	0.20	6.00	1.50	3.00	327R06-12 18002-GM	6.00	9.70	3.50	0.00	0.02	50000	●	●	○
1.90	0.20	0.20	6.00	1.50	3.00	327R06-12 19002-GM	6.00	9.70	3.50	0.00	0.02	50000	●	●	○
2.00	0.20	0.20	6.00	1.50	3.00	327R06-12 20002-GM	6.00	9.70	3.50	0.00	0.02	50000	●	●	○
2.10	0.20	0.20	6.00	1.50	3.00	327R06-12 21002-GM	6.00	9.70	3.50	0.00	0.02	50000	●	●	○
2.20	0.20	0.20	6.00	1.50	3.00	327R06-12 22002-GM	6.00	9.70	3.50	0.00	0.02	50000	●	●	○
2.30	0.20	0.20	6.00	1.50	3.00	327R06-12 23002-GM	6.00	9.70	3.50	0.00	0.02	50000	●	●	○
2.40	0.20	0.20	6.00	1.50	3.00	327R06-12 24002-GM	6.00	9.70	3.50	0.00	0.02	50000	●	●	○
2.50	0.20	0.20	6.00	1.50	3.00	327R06-12 25002-GM	6.00	9.70	3.50	0.00	0.02	50000	●	●	○
2.60	0.20	0.20	6.00	1.50	3.00	327R06-12 26002-GM	6.00	9.70	3.50	0.00	0.02	50000	●	●	○
2.70	0.20	0.20	6.00	1.50	3.00	327R06-12 27002-GM	6.00	9.70	3.50	0.00	0.02	50000	●	●	○
2.80	0.20	0.20	6.00	1.50	3.00	327R06-12 28002-GM	6.00	9.70	3.50	0.00	0.02	50000	●	●	○
2.90	0.20	0.20	6.00	1.50	3.00	327R06-12 29002-GM	6.00	9.70	3.50	0.00	0.02	50000	●	●	○
3.00	0.20	0.20	6.00	1.50	3.00	327R06-12 30002-GM	6.00	9.70	3.50	0.00	0.02	50000	●	●	○

327R08三刃旋风铣刀

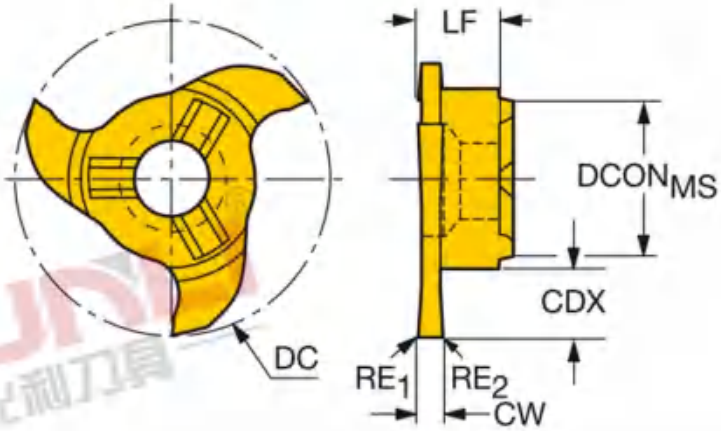

CW	RE$_1$	RE$_2$	CZC$_{US}$	CDX	ZEFP	型号	尺寸, DCON$_{MS}$	DC	LF	CWTOLL	CWTOLU	RPMX	YL10	YL740	YL930
1.00	0.10	0.10	8.00	2.50	3.00	327R08-16 10001-GM	8.00	16.00	3.50	0.00	0.02	50000	●	●	○
1.20	0.10	0.10	8.00	2.50	3.00	327R08-16 12001-GM	8.00	16.00	3.50	0.00	0.02	50000	●	●	○
1.30	0.10	0.10	8.00	2.50	3.00	327R08-16 13001-GM	8.00	16.00	3.50	0.00	0.02	50000	●	●	○
1.40	0.10	0.10	8.00	2.50	3.00	327R08-16 14002-GM	8.00	16.00	3.50	0.00	0.02	50000	●	●	○
1.50	0.20	0.20	8.00	2.50	3.00	327R08-16 15002-GM	8.00	16.00	3.50	0.00	0.02	50000	●	●	○
1.60	0.20	0.20	8.00	2.50	3.00	327R08-16 16002-GM	8.00	16.00	3.50	0.00	0.02	50000	●	●	○
1.70	0.20	0.20	8.00	2.50	3.00	327R08-16 17002-GM	8.00	16.00	3.50	0.00	0.02	50000	●	●	○
1.80	0.20	0.20	8.00	2.50	3.00	327R08-16 18002-GM	8.00	16.00	3.50	0.00	0.02	50000	●	●	○
1.90	0.20	0.20	8.00	2.50	3.00	327R08-16 19002-GM	8.00	16.00	3.50	0.00	0.02	50000	●	●	○
2.00	0.20	0.20	8.00	2.50	3.00	327R08-16 20002-GM	8.00	16.00	3.50	0.00	0.02	50000	●	●	○
2.10	0.20	0.20	8.00	2.50	3.00	327R08-16 21002-GM	8.00	16.00	3.50	0.00	0.02	50000	●	●	○
2.20	0.20	0.20	8.00	2.50	3.00	327R08-16 22002-GM	8.00	16.00	3.50	0.00	0.02	50000	●	●	○
2.30	0.20	0.20	8.00	2.50	3.00	327R08-16 23002-GM	8.00	16.00	3.50	0.00	0.02	50000	●	●	○
2.40	0.20	0.20	8.00	2.50	3.00	327R08-16 24002-GM	8.00	16.00	3.50	0.00	0.02	50000	●	●	○
2.50	0.20	0.20	8.00	2.50	3.00	327R08-16 25002-GM	8.00	16.00	3.50	0.00	0.02	50000	●	●	○
2.60	0.20	0.20	8.00	2.50	3.00	327R08-16 26002-GM	8.00	16.00	3.50	0.00	0.02	50000	●	●	○
2.70	0.20	0.20	8.00	2.50	3.00	327R08-16 27002-GM	8.00	16.00	3.50	0.00	0.02	50000	●	●	○
2.80	0.20	0.20	8.00	2.50	3.00	327R08-16 28002-GM	8.00	16.00	3.50	0.00	0.02	50000	●	●	○
2.90	0.20	0.20	8.00	2.50	3.00	327R08-16 29002-GM	8.00	16.00	3.50	0.00	0.02	50000	●	●	○
3.00	0.20	0.20	8.00	2.50	3.00	327R08-16 30002-GM	8.00	16.00	3.50	0.00	0.02	50000	●	●	○
3.10	0.20	0.20	8.00	2.50	3.00	327R08-16 31002-GM	8.00	16.00	3.50	0.00	0.02	50000	●	●	○
3.20	0.20	0.20	8.00	2.50	3.00	327R08-16 32002-GM	8.00	16.00	3.50	0.00	0.02	50000	●	●	○
3.30	0.20	0.20	8.00	2.50	3.00	327R08-16 33002-GM	8.00	16.00	3.50	0.00	0.02	50000	●	●	○
3.40	0.20	0.20	8.00	2.50	3.00	327R08-16 34002-GM	8.00	16.00	3.50	0.00	0.02	50000	●	●	○
3.50	0.20	0.20	8.00	2.50	3.00	327R08-16 35002-GM	8.00	16.00	3.50	0.00	0.02	50000	●	●	○
3.60	0.20	0.20	8.00	2.50	3.00	327R08-16 36002-GM	8.00	16.00	3.50	0.00	0.02	50000	●	●	○
3.70	0.20	0.20	8.00	2.50	3.00	327R08-16 37002-GM	8.00	16.00	3.50	0.00	0.02	50000	●	●	○
3.80	0.20	0.20	8.00	2.50	3.00	327R08-16 38002-GM	8.00	16.00	3.50	0.00	0.02	50000	●	●	○
3.90	0.20	0.20	8.00	2.50	3.00	327R08-16 39002-GM	8.00	16.00	3.50	0.00	0.02	50000	●	●	○
4.00	0.20	0.20	8.00	2.50	3.00	327R08-16 40002-GM	8.00	16.00	3.50	0.00	0.02	50000	●	●	○

327R09三刃旋风铣刀

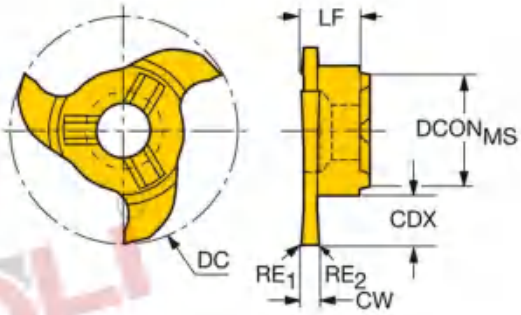

CW	RE_1	RE_2	CZC_{MS}	CDX	ZEFP	型号	尺寸								
							$DCON_{MS}$	DC	LF	CWTOLL	CWTOLU	RPMX	YL10	YL740	YL930
1.00	0.10	0.10	9.00	3.50	3.00	327R09-18 10001-GM	9.00	17.70	5.75	0.00	0.02	50000	●	●	○
1.20	0.10	0.10	9.00	3.50	3.00	327R09-18 12001-GM	9.00	17.70	5.75	0.00	0.02	50000	●	●	○
1.30	0.10	0.10	9.00	3.50	3.00	327R09-18 13001-GM	9.00	17.70	5.75	0.00	0.02	50000	●	●	○
1.40	0.20	0.10	9.00	3.50	3.00	327R09-18 14002-GM	9.00	17.70	5.75	0.00	0.02	50000	●	●	○
1.50	0.20	0.20	9.00	3.50	3.00	327R09-18 15002-GM	9.00	17.70	5.75	0.00	0.02	50000	●	●	○
1.60	0.20	0.20	9.00	3.50	3.00	327R09-18 16002-GM	9.00	17.70	5.75	0.00	0.02	50000	●	●	○
1.70	0.20	0.20	9.00	3.50	3.00	327R09-18 17002-GM	9.00	17.70	5.75	0.00	0.02	50000	●	●	○
1.80	0.20	0.20	9.00	3.50	3.00	327R09-18 18002-GM	9.00	17.70	5.75	0.00	0.02	50000	●	●	○
1.90	0.20	0.20	9.00	3.50	3.00	327R09-18 19002-GM	9.00	17.70	5.75	0.00	0.02	50000	●	●	○
2.00	0.20	0.20	9.00	3.50	3.00	327R09-18 20002-GM	9.00	17.70	5.75	0.00	0.02	50000	●	●	○
2.10	0.20	0.20	9.00	3.50	3.00	327R09-18 21002-GM	9.00	17.70	5.75	0.00	0.02	50000	●	●	○
2.20	0.20	0.20	9.00	3.50	3.00	327R09-18 22002-GM	9.00	17.70	5.75	0.00	0.02	50000	●	●	○
2.30	0.20	0.20	9.00	3.50	3.00	327R09-18 23002-GM	9.00	17.70	5.75	0.00	0.02	50000	●	●	○
2.40	0.20	0.20	9.00	3.50	3.00	327R09-18 24002-GM	9.00	17.70	5.75	0.00	0.02	50000	●	●	○
2.50	0.20	0.20	9.00	3.50	3.00	327R09-18 25002-GM	9.00	17.70	5.75	0.00	0.02	50000	●	●	○
2.60	0.20	0.20	9.00	3.50	3.00	327R09-18 26002-GM	9.00	17.70	5.75	0.00	0.02	50000	●	●	○
2.70	0.20	0.20	9.00	3.50	3.00	327R09-18 27002-GM	9.00	17.70	5.75	0.00	0.02	50000	●	●	○
2.80	0.20	0.20	9.00	3.50	3.00	327R09-18 28002-GM	9.00	17.70	5.75	0.00	0.02	50000	●	●	○
2.90	0.20	0.20	9.00	3.50	3.00	327R09-18 29002-GM	9.00	17.70	5.75	0.00	0.02	50000	●	●	○
3.00	0.20	0.20	9.00	3.50	3.00	327R09-18 30002-GM	9.00	17.70	5.75	0.00	0.02	50000	●	●	○
3.10	0.20	0.20	9.00	3.50	3.00	327R09-18 31002-GM	9.00	17.70	5.75	0.00	0.02	50000	●	●	○
3.20	0.20	0.20	9.00	3.50	3.00	327R09-18 32002-GM	9.00	17.70	5.75	0.00	0.02	50000	●	●	○
3.30	0.20	0.20	9.00	3.50	3.00	327R09-18 33002-GM	9.00	17.70	5.75	0.00	0.02	50000	●	●	○
3.40	0.20	0.20	9.00	3.50	3.00	327R09-18 34002-GM	9.00	17.70	5.75	0.00	0.02	50000	●	●	○
3.50	0.20	0.20	9.00	3.50	3.00	327R09-18 35002-GM	9.00	17.70	5.75	0.00	0.02	50000	●	●	○
3.60	0.20	0.20	9.00	3.50	3.00	327R09-18 36002-GM	9.00	17.70	5.75	0.00	0.02	50000	●	●	○
3.70	0.20	0.20	9.00	3.50	3.00	327R09-18 37002-GM	9.00	17.70	5.75	0.00	0.02	50000	●	●	○
3.80	0.20	0.20	9.00	3.50	3.00	327R09-18 38002-GM	9.00	17.70	5.75	0.00	0.02	50000	●	●	○
3.90	0.20	0.20	9.00	3.50	3.00	327R09-18 39002-GM	9.00	17.70	5.75	0.00	0.02	50000	●	●	○
4.00	0.20	0.20	9.00	3.50	3.00	327R09-18 40002-GM	9.00	17.70	5.75	0.00	0.02	50000	●	●	○
4.10	0.20	0.20	9.00	3.50	3.00	327R09-18 41002-GM	9.00	17.70	5.75	0.00	0.02	50000	●	●	○
4.20	0.20	0.20	9.00	3.50	3.00	327R09-18 42002-GM	9.00	17.70	5.75	0.00	0.02	50000	●	●	○
4.30	0.20	0.20	9.00	3.50	3.00	327R09-18 43002-GM	9.00	17.70	5.75	0.00	0.02	50000	●	●	○
4.40	0.20	0.20	9.00	3.50	3.00	327R09-18 44002-GM	9.00	17.70	5.75	0.00	0.02	50000	●	●	○
4.50	0.20	0.20	9.00	3.50	3.00	327R09-18 45002-GM	9.00	17.70	5.75	0.00	0.02	50000	●	●	○
4.60	0.20	0.20	9.00	3.50	3.00	327R09-18 46002-GM	9.00	17.70	5.75	0.00	0.02	50000	●	●	○
4.70	0.20	0.20	9.00	3.50	3.00	327R09-18 47002-GM	9.00	17.70	5.75	0.00	0.02	50000	●	●	○
4.80	0.20	0.20	9.00	3.50	3.00	327R09-18 48002-GM	9.00	17.70	5.75	0.00	0.02	50000	●	●	○
4.90	0.20	0.20	9.00	3.50	3.00	327R09-18 49002-GM	9.00	17.70	5.75	0.00	0.02	50000	●	●	○
5.00	0.20	0.20	9.00	3.50	3.00	327R09-18 50002-GM	9.00	17.70	5.75	0.00	0.02	50000	●	●	○

327R14三刃旋风铣刀

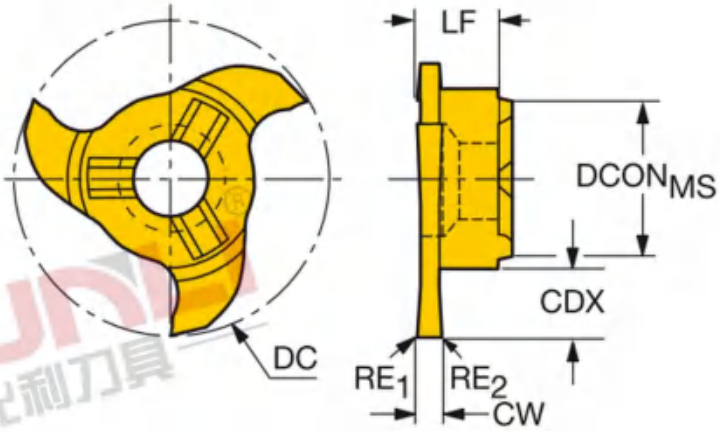

CW	RE$_1$	RE$_2$	CZC$_{MS}$	CDX	ZEFP	型号	DCON$_{MS}$	DC	LF	CWTOLL	CWTOLU	RPMX	YL10	YL740	YL930
						尺寸，mm									
1.50	0.00	0.00	14.0	6.5	3	327R14-28 15000-GM	14.30	27.70	6.50	0.000	0.020	5000	●	●	○
2.00	0.20	0.20	14.0	6.5	3	327R14-28 20002-GM	14.30	27.70	6.50	0.000	0.020	5000	●	●	○
2.50	0.20	0.20	14.0	6.5	3	327R14-28 25002-GM	14.30	27.70	6.50	0.000	0.020	5000	●	●	○
3.00	0.20	0.20	14.0	6.5	3	327R14-28 30002-GM	14.30	27.70	6.50	0.000	0.020	5000	●	●	○
3.50	0.20	0.20	14.0	6.5	3	327R14-28 35002-GM	14.30	27.70	6.50	0.000	0.020	5000	●	●	○
4.00	0.20	0.20	14.0	6.5	3	327R14-28 40002-GM	14.30	27.70	6.50	0.000	0.020	5000	●	●	○
4.50	0.20	0.20	14.0	6.5	3	327R14-28 45002-GM	14.30	27.70	6.50	0.000	0.020	5000	●	●	○
5.00	0.20	0.20	14.0	6.5	3	327R14-28 50002-GM	14.30	27.70	6.50	0.000	0.020	5000	●	●	○
5.50	0.20	0.20	14.0	6.5	3	327R14-28 55002-GM	14.30	27.70	6.50	0.000	0.020	5000	●	●	○
6.00	0.20	0.20	14.0	6.5	3	327R14-28 60002-GM	14.30	27.70	6.50	0.000	0.020	5000	●	●	○

327R14六刃旋风铣刀

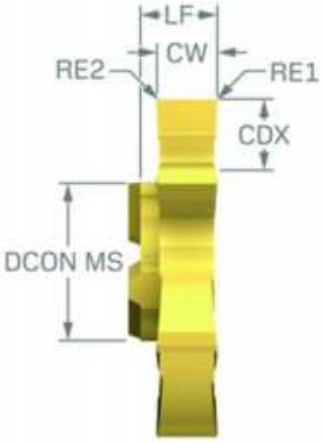

CW	RE_1	RE_2	CZC_{MS}	CDX	ZEFP	型号	尺寸，mm $DCON_{MS}$	DC	LF	CWTOLL	CWTOLU	RPMX	YL10	YL740	YL930
1.50	0.10	0.10	14.0	10.0	6	327R14-35 15001-GMM	14.30	34.70	6.25	0.000	0.020	5000	●	●	○
2.00	0.20	0.20	14.0	10.0	6	327R14-35 20002-GMM	14.30	34.70	6.25	0.000	0.020	5000	●	●	○
2.50	0.20	0.20	14.0	10.0	6	327R14-35 25002-GMM	14.30	34.70	6.25	0.000	0.020	5000	●	●	○
3.00	0.20	0.20	14.0	10.0	6	327R14-35 30002-GMM	14.30	34.70	6.25	0.000	0.020	5000	●	●	○
3.50	0.20	0.20	14.0	10.0	6	327R14-35 35002-GMM	14.30	34.70	6.25	0.000	0.020	5000	●	●	○
4.00	0.20	0.20	14.0	10.0	6	327R14-35 40002-GMM	14.30	34.70	6.25	0.000	0.020	5000	●	●	○
4.50	0.20	0.20	14.0	10.0	6	327R14-35 45002-GMM	14.30	34.70	6.25	0.000	0.020	5000	●	●	○
5.00	0.20	0.20	14.0	10.0	6	327R14-35 50002-GMM	14.30	34.70	6.25	0.000	0.020	5000	●	●	○

327R三刃旋风铣刀

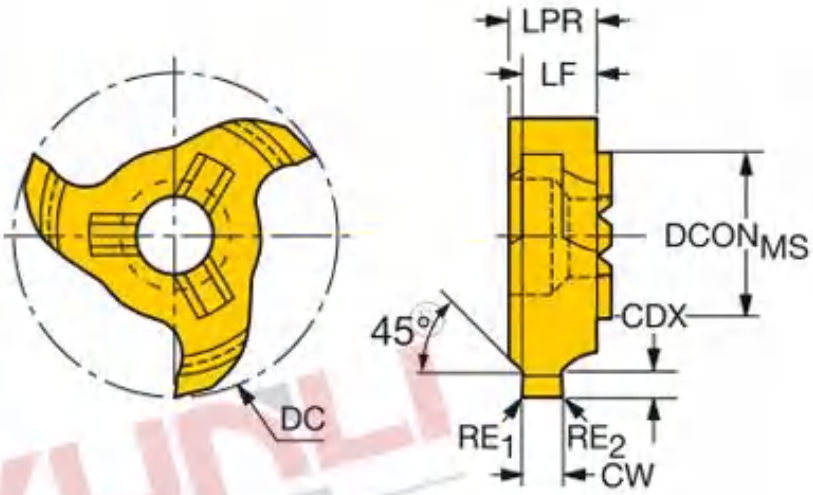

带倒角的簧环槽

CW	RE_1	RE_2	CZC_{ap}	CDX	ZEFP	型号	$DCON_{ap}$	DC	LF	LPR	CWTOLL	CWTOLU	RPMX	YL10	YL740	YL930
							尺寸，mm									
1.10	0.00	0.00	12.0	0.5	3	327R12-22 11045-GC	12.00	21.70	5.00	5.80	0.090	0.110	50000	●	●	○
1.30	0.00	0.00	12.0	0.7	3	327R12-22 13045-GC	12.00	21.70	5.20	5.80	0.090	0.110	50000	●	●	○
1.60	0.00	0.00	12.0	1.0	3	327R12-22 16045-GC	12.00	21.70	5.00	5.80	0.090	0.110	50000	●	●	○
1.85	0.15	0.15	12.0	1.3	3	327R12-22 18545-GC	12.00	21.70	5.20	5.80	0.090	0.110	50000	●	●	○
2.15	0.15	0.15	12.0	1.5	3	327R12-22 21545-GC	12.00	21.70	5.30	5.85	0.090	0.110	50000	●	●	○
2.65	0.15	0.15	12.0	1.5	3	327R12-22 26545-GC	12.00	21.70	5.00	5.80	0.090	0.110	50000	●	●	○
3.15	0.20	0.20	12.0	1.8	3	327R12-22 31545-GC	12.00	21.70	5.30	5.80	0.090	0.110	50000	●	●	○
4.15	0.20	0.20	12.0	2.0	3	327R12-22 41545-GC	12.00	21.70	5.30	5.85	0.090	0.110	50000	●	●	○
1.30	0.00	0.00	12.0	0.8	3	327R12-221304508-GC	12.00	21.70	5.20	5.80	0.090	0.110	50000	●	●	○
1.60	0.00	0.00	12.0	0.8	3	327R12-221604508-GC	12.00	21.70	5.00	5.80	0.090	0.110	50000	●	●	○
2.65	0.15	0.15	12.0	1.8	3	327R12-222654518-GC	12.00	21.70	5.00	5.80	0.090	0.110	50000	●	●	○
4.15	0.20	0.20	12.0	2.5	3	327R12-224154525-GC	12.00	21.70	5.30	5.85	0.090	0.110	50000	●	●	○

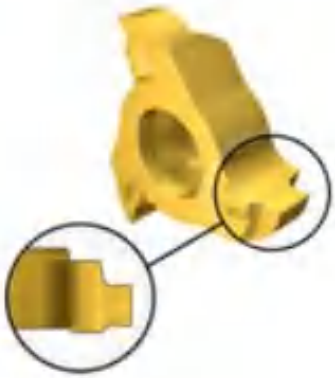

327R三刃旋风铣刀

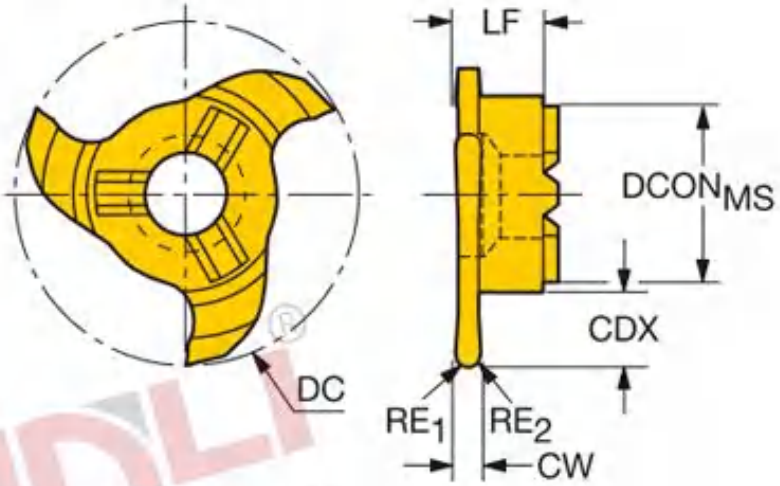

适用于全半径切槽

CW	RE_1	RE_2	$C2C_{MS}$	CDX	ZEFP	型号	$DCON_{MS}$	DC	LF	CWTOLL	CWTOLU	RPMX	YL10	YL740	YL930
						尺寸，mm									
2.20	1.10	1.10	6.0	2.5	3	327R06-12 22011-RM	6.00	11.70	3.50	0.000	0.030	50000	●	●	○
2.20	1.10	1.10	9.0	3.5	3	327R09-18 22011-RM	9.00	17.70	5.75	0.000	0.030	50000	●	●	○
1.00	0.50	0.50	12.0	4.5	3	327R12-22 10005-RM	12.00	21.70	5.75	0.000	0.030	50000	●	●	○
2.00	1.00	1.00	12.0	4.5	3	327R12-22 20010-RM	12.00	21.70	5.75	0.000	0.030	50000	●	●	○
3.00	1.50	1.50	12.0	4.5	3	327R12-22 30015-RM	12.00	21.70	5.75	0.000	0.030	50000	●	●	○
4.00	2.00	2.00	12.0	4.5	3	327R12-22 40020-RM	12.00	21.70	5.75	0.000	0.030	50000	●	●	○

327R三刃旋风铣刀

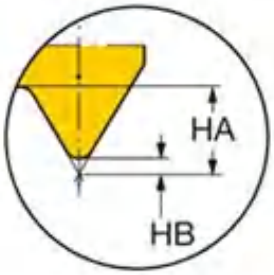

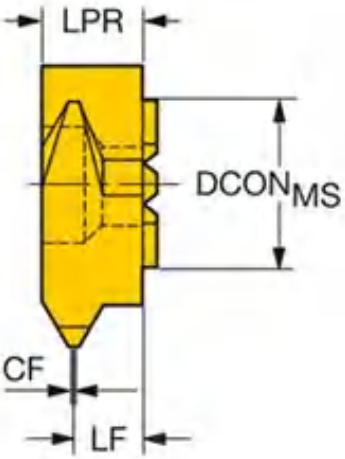

V 牙形 60°

TPN	TPX	TPIN	TPIX	DC	CZCMS	ZEFP	型号	DCONMS	CF	HA	HB	LF	LPR	YL10	YL740	YL930
								尺寸，mm								
1.0	2.0	12.0	24.0	11.70	6.0	3	327R06-12 100VM-TH	6.00	0.1	1.36	0.11	2.8	3.60	●	●	○
1.0	2.0	12.0	24.0	17.70	9.0	3	327R09-18 100VM-TH	9.00	0.1	1.30	0.11	4.7	5.85	●	●	○
1.0	2.0	12.0	24.0	17.70	9.0	6	327R09-18 100VM-THM	9.00	0.1	1.30	0.11	5.0	5.85	●	●	○
1.0	2.0	12.0	24.0	21.70	12.0	3	327R12-22 100VM-TH	12.00	0.1	1.30	0.11	4.6	5.80	●	●	○
1.0	2.0	12.0	24.0	21.70	12.0	6	327R12-22 100VM-THM	12.00	0.1	1.36	0.11	5.1	6.35	●	●	○
2.5	3.0	8.0	10.0	11.70	6.0	3	327R06-12 250VM-TH	6.00	0.3	2.00	0.22	2.2	3.60	●	●	○
2.5	3.5	7.0	10.0	17.70	9.0	3	327R09-18 250VM-TH	9.00	0.3	2.88	0.22	4.2	5.85	●	●	○
2.5	3.5	7.0	10.0	17.70	9.0	6	327R09-18 250VM-THM	9.00	0.3	2.88	0.22	4.3	5.85	●	●	○
2.5	4.5	5.0	10.0	21.70	12.0	3	327R12-22 250VM-TH	12.00	0.3	2.92	0.22	3.7	5.60	●	●	○
2.5	4.5	5.0	10.0	21.70	12.0	6	327R12-22 250VM-THM	12.00	0.3	2.92	0.22	4.2	6.05	●	●	○

327R三刃旋风铣刀

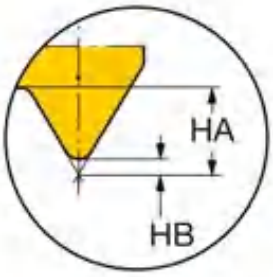

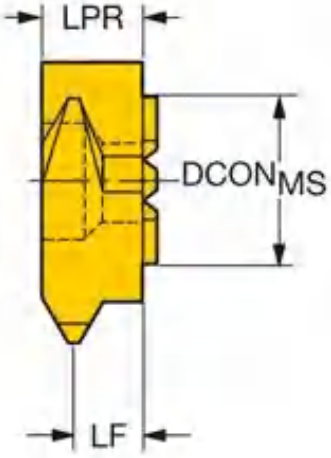

公制 60° 全牙型

TP	DC	CZC_{MS}	ZEFP	型号	尺寸，mm $DCON_{MS}$	HA	HB	LF	LPR	YL10	YL740	YL930
1.50	17.70	9.0	3	327R09-18 150MM-TH	9.00	0.97	0.16	4.8	5.85	●	●	○
1.50	17.70	9.0	6	327R09-18 150MM-THM	9.00	0.97	0.16	5.0	5.85	●	●	○
2.00	17.70	9.0	3	327R09-18 200MM-TH	9.00	1.30	0.22	4.6	5.85	●	●	○
2.00	17.70	9.0	6	327R09-18 200MM-THM	9.00	1.30	0.22	4.8	5.85	●	●	○
3.00	17.70	9.0	3	327R09-18 300MM-TH	9.00	1.95	0.32	4.3	5.85	●	●	○
3.00	17.70	9.0	6	327R09-18 300MM-THM	9.00	1.95	0.32	4.6	5.85	●	●	○
3.50	17.70	9.0	3	327R09-18 350MM-TH	9.00	2.27	0.38	4.0	5.85	●	●	○
3.50	17.70	9.0	6	327R09-18 350MM-THM	9.00	2.27	0.38	4.0	5.85	●	●	○
1.50	21.70	12.0	3	327R12-22 150MM-TH	12.00	0.97	0.16	4.8	5.80	●	●	○
1.75	21.70	12.0	3	327R12-22 175MM-TH	12.00	1.14	0.19	4.7	5.80	●	●	○
2.00	21.70	12.0	3	327R12-22 200MM-TH	12.00	1.30	0.22	4.6	5.80	●	●	○
3.00	21.70	12.0	3	327R12-22 300MM-TH	12.00	1.95	0.32	4.3	5.80	●	●	○
3.50	21.70	12.0	3	327R12-22 350MM-TH	12.00	2.27	0.38	4.0	5.80	●	●	○
4.00	21.70	12.0	3	327R12-22 400MM-TH	12.00	2.60	0.43	3.9	5.80	●	●	○
4.50	21.70	12.0	3	327R12-22 450MM-TH	12.00	2.92	0.49	3.7	5.70	●	●	○

327R三刃旋风铣刀

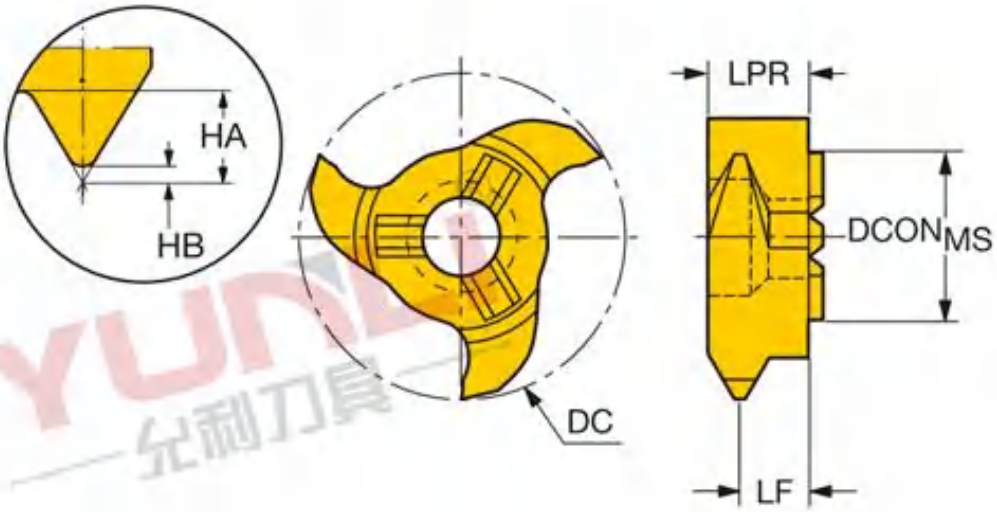

惠氏 55° 全牙形

TPI	DC	CZC_{MS}	ZEFP	型号	尺寸，mm $DCON_{MS}$	HA	HB	LF	LPR	YL10	YL740	YL930
19	11.70	6.0	3	327R06-12 19WH-TH	6.00	1.07	0.21	2.5	3.60	●	●	○
19	17.70	9.0	3	327R09-18 19WH-TH	9.00	1.07	0.21	4.9	5.85	●	●	○
14	11.70	6.0	3	327R06-12 14WH-TH	6.00	1.45	0.29	2.3	3.60	●	●	○
14	17.70	9.0	3	327R09-18 14WH-TH	9.00	1.45	0.29	4.6	5.85	●	●	○
11	11.70	6.0	3	327R06-12 11WH-TH	6.00	1.85	0.37	2.0	3.60	●	●	○
11	17.70	9.0	3	327R09-18 11WH-TH	9.00	1.85	0.37	4.4	5.85	●	●	○

327R三刃旋风铣刀

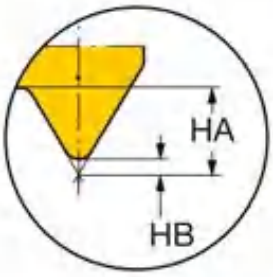

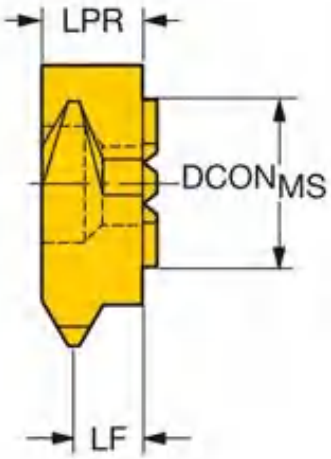

UN 60° 全牙型

TPI	DC	CZC_{GS}	APMX	ZEFP	型号	尺寸，mm $DCON_{MS}$	HA	HB	LF	LPR	YL10	YL740	YL930
20	17.70	9.0	0.69	3	327R09-18 20UN-TH	9.00	0.82	0.14	5.2	5.85	●	●	○
18	17.70	9.0	0.76	3	327R09-18 18UN-TH	9.00	0.92	0.15	5.0	5.85	●	●	○
16	17.70	9.0	0.86	3	327R09-18 16UN-TH	9.00	1.03	0.17	5.0	5.85	●	●	○
16	17.70	9.0	0.86	6	327R09-18 16UN-THM	9.00	1.03	0.17	5.0	5.85	●	●	○
14	17.70	9.0	0.99	3	327R09-18 14UN-TH	9.00	1.18	0.20	5.0	5.85	●	●	○
14	17.70	9.0	0.99	6	327R09-18 14UN-THM	9.00	1.18	0.20	5.0	5.85	●	●	○
12	17.70	9.0	1.14	3	327R09-18 12UN-TH	9.00	1.37	0.23	4.9	5.85	●	●	○
12	17.70	9.0	1.14	6	327R09-18 12UN-THM	9.00	1.37	0.23	4.9	5.85	●	●	○
11	17.70	9.0	1.24	3	327R09-18 11UN-TH	9.00	1.50	0.25	4.8	5.85	●	●	○
11	17.70	9.0	1.24	6	327R09-18 11UN-THM	9.00	1.50	0.25	4.8	5.85	●	●	○
10	17.70	9.0	1.37	3	327R09-18 10UN-TH	9.00	1.65	0.27	4.7	5.85	●	●	○
8	17.70	9.0	1.73	3	327R09-18 08UN-TH	9.00	2.06	0.34	4.4	5.85	●	●	○
8	17.70	9.0	1.73	6	327R09-18 08UN-THM	9.00	2.06	0.34	4.4	5.85	●	●	○

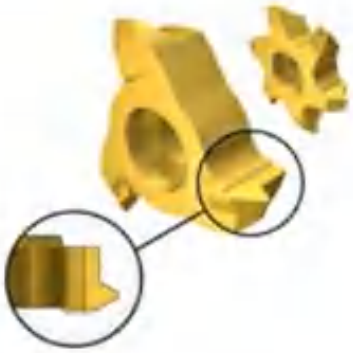

327R12三刃旋风铣刀刀杆

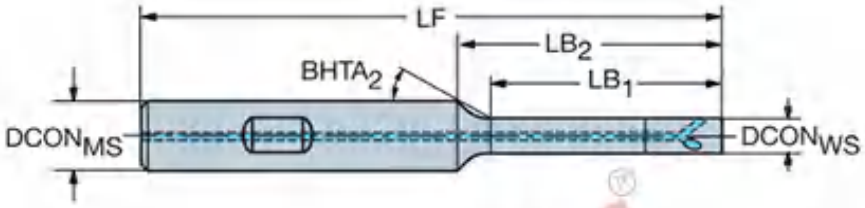

CZC$_{MS}$	CZC$_{WS}$	CNSC	CXSC	型号	尺寸：mm DCON$_{MS}$	DCON$_{WS}$	LSC	LF	LB$_1$	LB$_2$	BD$_1$	BHTA$_2$	BAR	NM	KG	RPMX
12	06	1	1	327-12B15SC-06	12.0	6.0	46	70.5	11.5	17.2	6.0	30°	20	1.80	0.07	40000
	06	1	1	327-12B21EC-06	12.0	6.0	46	76.5	17.5	23.2	6.0	30°	20	1.80	0.13	40000
	06	1	1	327-12B30EC-06	12.0	6.0	46	86.5	26.5	32.2	6.0	30°	20	1.80	0.13	40000
	06	1	1	327-12B42EC-06	12.0	6.0	46	96.5	38.5	44.2	6.0	30°	20	1.80	0.13	40000
16	09	1	1	327-16B18SC-09	16.0	9.0	49	74.3	12.2	18.8	9.0	30°	20	4.30	0.19	40000
	12	1	1	327-16B24SC-12	16.0	12.0	49	74.3	18.3	22.3	12.0	30°	20	6.50	0.10	40000
	09	1	1	327-16B32EC-09	16.0	9.0	49	94.3	26.2	32.8	9.0	30°	20	4.30	0.27	40000
	09	1	1	327-16B45EC-09	16.0	9.0	49	104.3	39.2	45.8	9.0	30°	20	4.30	0.20	40000
	09	1	1	327-16B64EC-09	16.0	9.0	49	124.3	58.2	64.8	9.0	30°	20	4.30	0.30	40000
	12	1	1	327-16B42EC-12	16.0	12.0	49	94.3	36.3	40.3	12.0	30°	20	6.50	0.28	40000
	12	1	1	327-16B60EC-12	16.0	12.0	49	124.3	54.3	58.3	12.0	30°	20	6.50	0.34	35000
	12	1	1	327-16B85EC-12	16.0	12.0	49	154.3	79.3	83.3	12.0	30°	20	6.50	0.39	30000
	14	1	1	327-16B42EC-14	16.0	14.3	49	93.5	35.5	37.5	14.3	30°	20	6.50	0.30	40000
	14	1	1	327-16B60EC-14	16.0	14.3	49	123.5	53.5	55.5	14.3	30°	20	6.50	0.37	35000
	14	1	1	327-16B85EC-14	16.0	14.3	49	153.5	78.5	80.5	14.3	30°	20	6.50	0.47	27000
20	14	1	1	327-20B35SC-14	20.0	14.3	51	93.5	28.5	33.2	14.0	30°	20	6.50	0.28	40000

● LBMAR槽刀杆

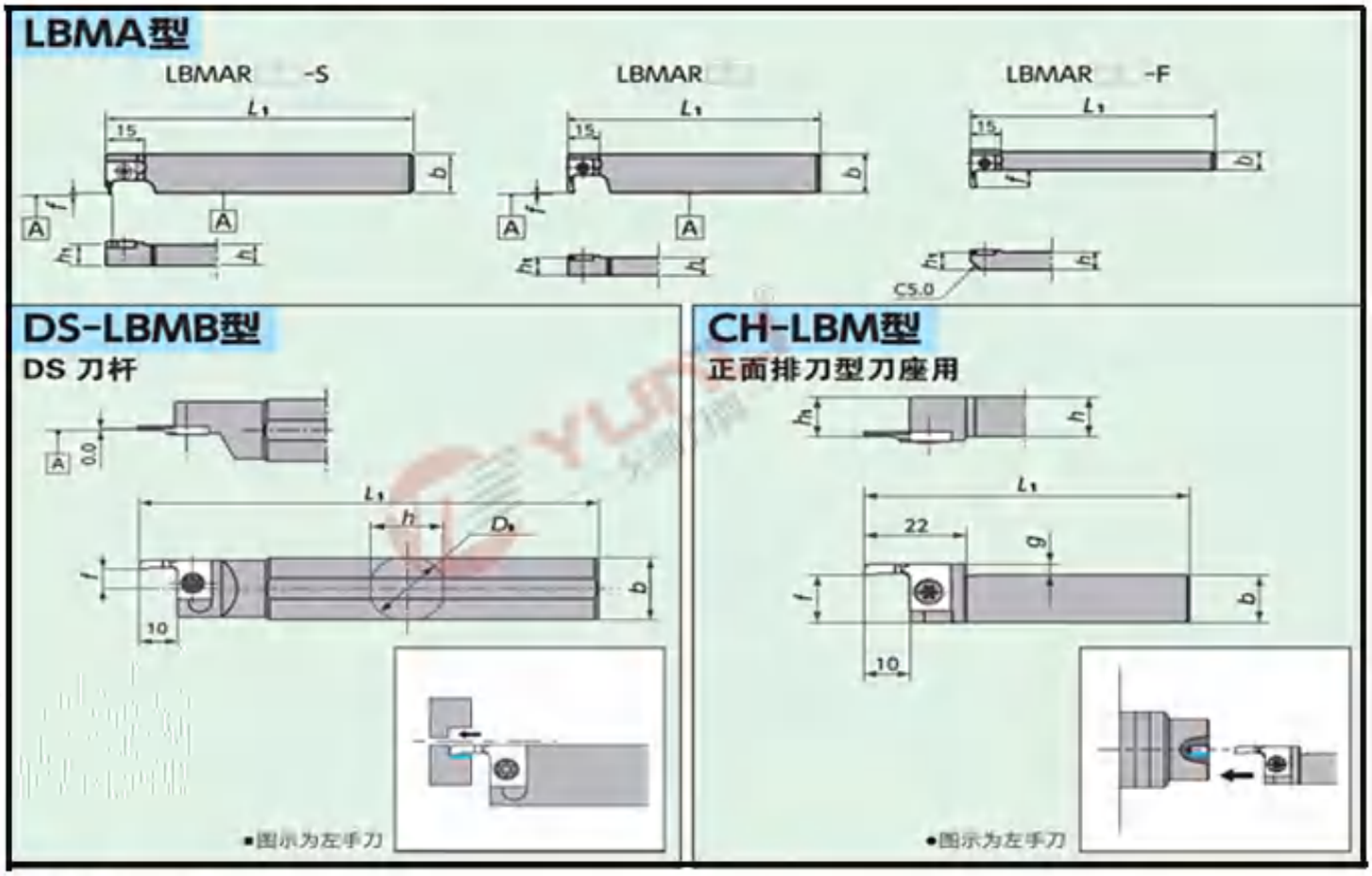

● 刀杆尺寸

刀杆形状	刀杆型号	尺寸(mm) D_m	h	b	L_1	h_1	f	适用刀片	零部件 紧固螺丝	零部件 扳手
	LBMAR 10 SGX	—	10	18	85	10	0.0	短刀片型	M4*10	T15
	LBMAR 10 S	—	10	18	120	10	0.0			
	LBMAR 12 S	—	12	18	120	12	0.0			
	LBMAR 08	—	8	21.5	120	8	0.0※5	长刀·短刀片型		
	LBMAR 10	—	10	21.5	120	10	0.0※5			
	LBMAR 12	—	12	21.5	120	12	0.0※5			
	LBMAR 16	—	16	21.5	120	16	0.0※5			
	LBMAR 10-F	—	10	10.0	120	10	10.0※5	长刀·短刀片型		
	DS-LBMBL 14 F	14	13	13	80※2	—	※3	长刀·短刀片型		
	DS-LBMBL 15 H	15.875	15	15	100※2	—	※3			
	DS-LBMBL 16 X※1	16	15	15	95※2	—	※3			
	DS-LBMBL 19	19.05	18	18	120※2	—	※3			
	DS-LBMBL 20	20	19	19	120※2	—	※3			
	DS-LBMBL 22※1	22	21	21	120※2	—	※3			
	DS-LBMBL 25 -MET	25	24	24	120※2	—	※3			
	DS-LBMBL 25	25.4	24	24	150※2	—	※3			
	CH-LBML 1012 H	—	10	12	100	10	※4	长刀·短刀片型		
	CH-LBML 1212 H	—	12	12	100	12	※4			

LBMD-S型
短刀片型

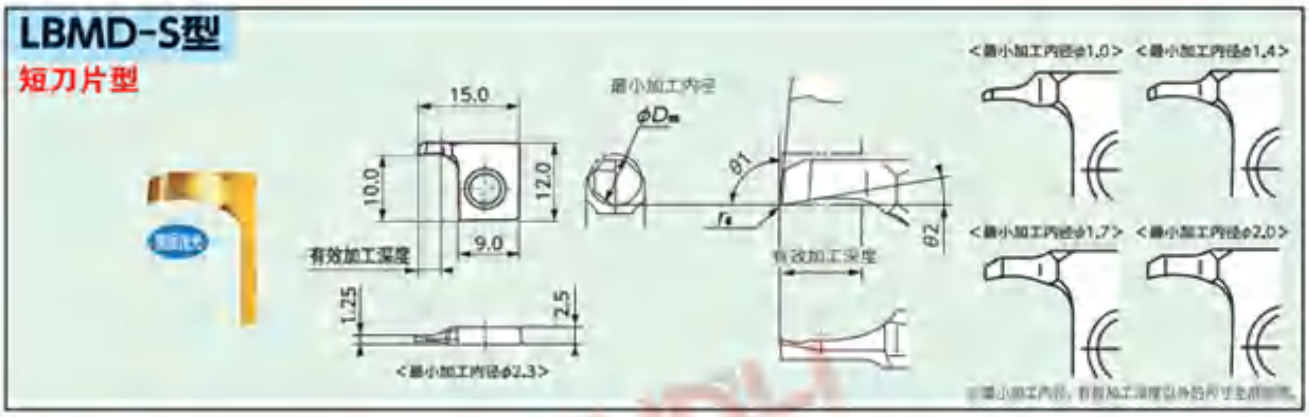

LBM型
长刀片型

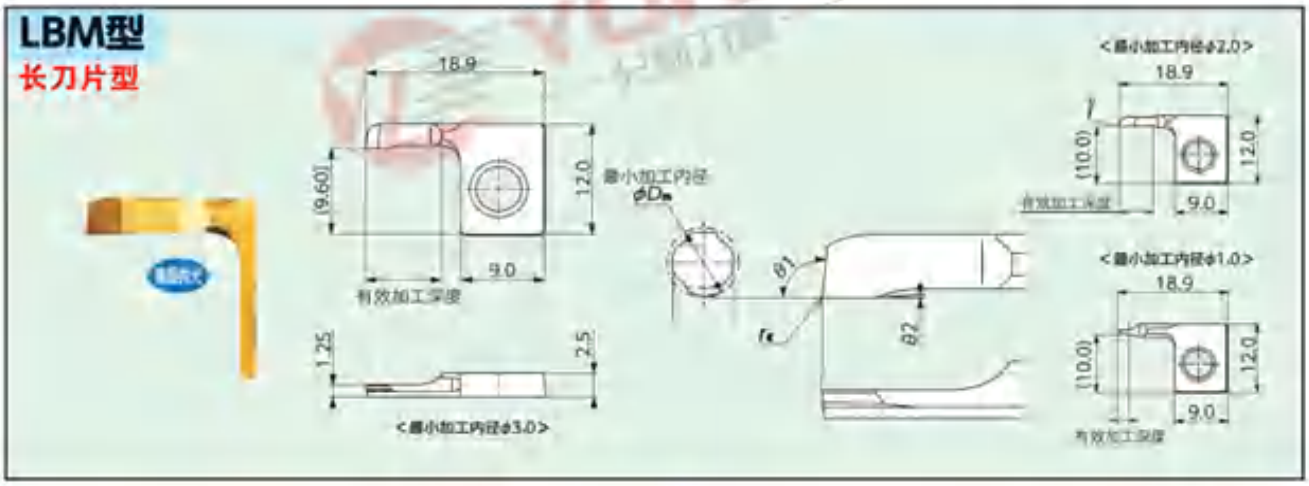

刀片类型	刀片型号	排屑槽	尺寸(mm) 最小加工直径φDm	有效加工深度	θ1	θ2	rε	涂层 YL10	YL740	YL930
短刀片型	LBMD 1020 FLVB S	有	1.0	2.0	95°	10°	0.00	●	○	●
	LBMD 1020 FLPB 05S	有	1.0	2.0	95°	10°	0.05	●	○	●
	LBMD 1430 FLVB S	有	1.4	3.0	95°	10°	0.00	●	○	●
	LBMD 1430 FLPB 05S	有	1.4	3.0	95°	10°	0.05	●	○	●
	LBMD 1730 FLVB S	有	1.7	3.0	95°	10°	0.00	●	○	●
	LBMD 1730 FLPB 05S	有	1.7	3.0	95°	10°	0.05	●	○	●
	LBMD 2035 FLVB S	有	2.0	3.5	95°	10°	0.00	●	○	●
	LBMD 2035 FLPB 05S	有	2.0	3.5	95°	10°	0.05	●	○	●
	LBMD 2335 FLVB S	有	2.3	3.5	95°	10°	0.00	●	○	●
	LBMD 2335 FLPB 05S	有	2.3	3.5	95°	10°	0.05	●	○	●
长刀片型	LBMD 1020 FLVB	有	1.0	2.0	95°	10°	0.00	●	○	●
	LBMD 1020 FLPB 05	有	1.0	2.0	95°	10°	0.05	●	○	●
	LBMD 2060 FLVB	有	2.0	6.0	95°	10°	0.00	●	○	●
	LBMD 2060 FLPB 05	有	2.0	6.0	95°	10°	0.05	●	○	●
	LBME 2060 FLV	无	2.0	6.0	105°	2°	0.00	●	○	●
	LBME 2060 FLP 05	无	2.0	6.0	105°	2°	0.05	●	○	●
	LBME 2060 FLVB	有	2.0	6.0	105°	2°	0.00	●	○	●
	LBME 2060 FLPB 05	有	2.0	6.0	105°	2°	0.05	●	○	●
	LBMC 3080 FLV	无	3.0	8.0	95°	2°	0.00	●	○	●
	LBMC 3080 FLP 05	无	3.0	8.0	95°	2°	0.05	●	○	●
	LBMC 3080 FLVB	有	3.0	8.0	95°	2°	0.00	●	○	●
	LBMC 3080 FLPB 05	有	3.0	8.0	95°	2°	0.05	●	○	●
	LBM 3080 FLVB	有	3.0	8.0	90°	2°	0.00	●	○	●
	LBM 3080 FLPB 05	有	3.0	8.0	90°	2°	0.05	●	○	●

SGITR内径浅槽刀杆

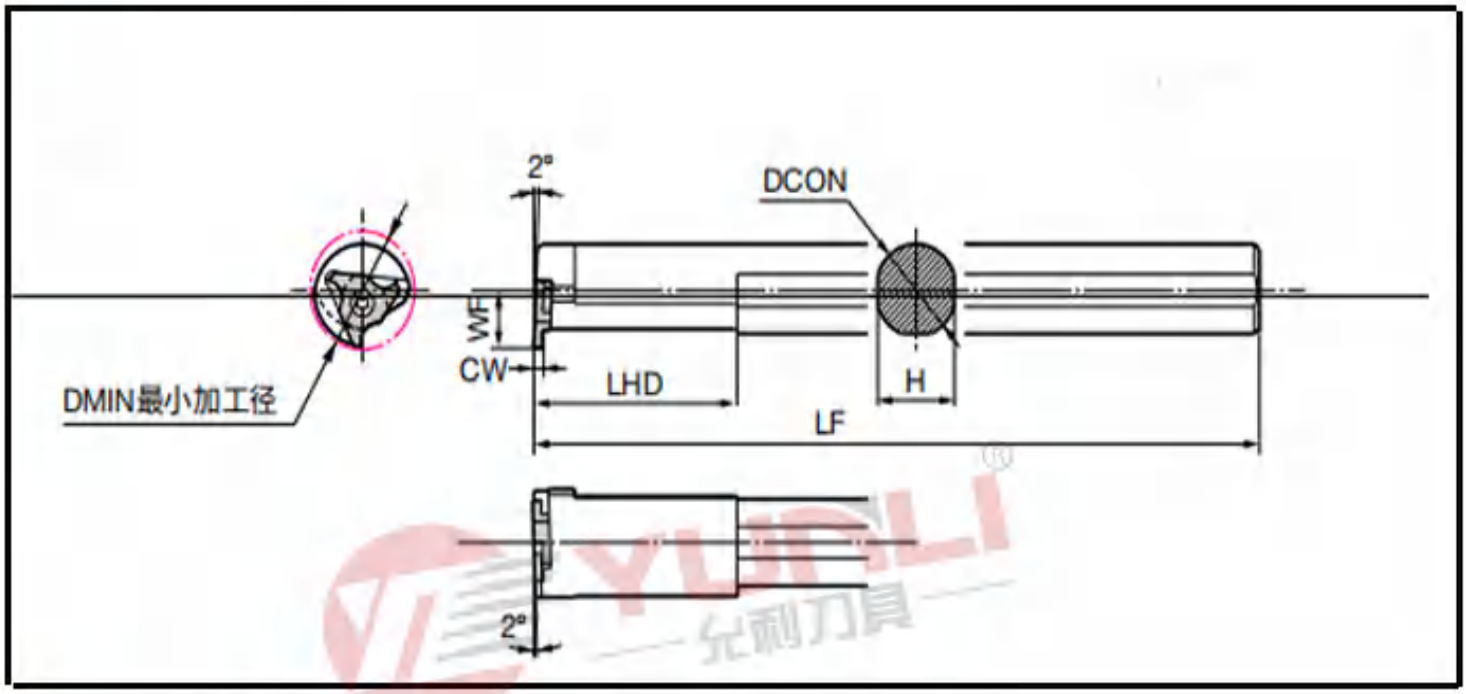

刀杆尺寸

型 号	直径 DCON	高度 H	全长 LF	刀头距离 WF	头部 LHD	最小加工径	刃宽 CW	最大槽深		平头螺钉	扳手
											RT08  RT10
SGIT R08	8	7.0	125	5.0	20	10.0	0.50~2.00	0.8°	GITL3○○○	BFTX02506NS	RT08
SGIT R10	10	9.0	150	6.0	25	12.0	0.50~2.00	0.8°			
SGIT R12	12	11.0	180	7.0	30	14.0	1.00~2.00	1.8	GITL5○○○	BFTX0307NS	RT10
SGIT R14	14	13.0	180	8.0	35	16.0	1.00~2.00	1.8			
SGIT R16	16	15.0	200	10.0	40	20.0	1.50~2.00	2.8	GITL6○○○	BFTX0307NS	RT10
SGIT R20	20	19.0	200	12.0	40	25.0	1.50~2.00	2.8			

GITL内径槽刀片

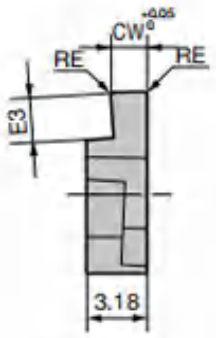

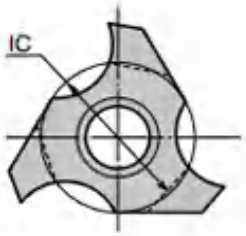

刀片尺寸

型　号	刃宽 CW	刀头距离 E3	刀尖半径 RE	内切圆 IC	适用刀杆	YL10	YL740	YL930
GIT L3050	0.50	1.2	0.05	5.56	SGIT R08 SGIT R10	●	●	○
GIT L3065	0.65	1.2	0.05	5.56		●	●	○
GIT L3075	0.75	1.2	0.05	5.56		●	●	○
GIT L3100	1.00	1.2	0.05	5.56		●	●	○
GIT L3125	1.25	1.2	0.20	5.56		●	●	○
GIT L3145	1.45	1.2	0.20	5.56		●	●	○
GIT L3150	1.50	1.2	0.05	5.56		●	●	○
GIT L3200	2.00	1.2	0.10	5.56		●	●	○
GIT L5100	1.00	2.2	0.05	7.94	SGIT R12 SGIT R14	●	●	○
GIT L5145	1.45	2.2	0.20	7.94		●	●	○
GIT L5150	1.50	2.2	0.05	7.94		●	●	○
GIT L5175	1.75	2.2	0.20	7.94		●	●	○
GIT L5200	2.00	2.2	0.10	7.94		●	●	○
GIT L6150	1.50	3.2	0.20	9.525	SGIT R16 SGIT R20	●	●	○
GIT L6175	1.75	3.2	0.20	9.525		●	●	○
GIT L6200	2.00	3.2	0.20	9.525		●	●	○

KGIAR内槽刀杆

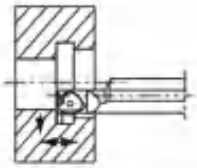

一体型

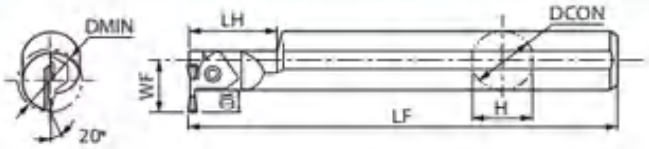

Fig. 1

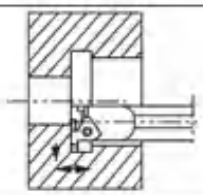

分体式

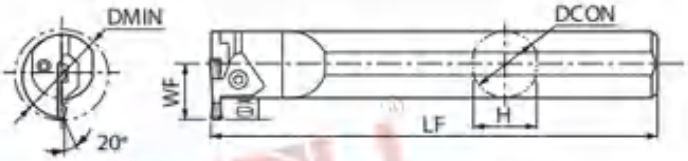

Fig. 2

• 本图为右手(R)

型号		最小加工径 DMIN	尺寸(mm) DCON	H	LF	LH	WF	CDX	形状	压板	紧固螺栓	扳手
KGIAR	3232B-3	32	32	30.4	200	45	26.5	10	Fig. 1	CGIA-3R	HH5X15	LW-4
	4332B-3	43	32	30	200	-	26.3		Fig. 2			
	5140B-3	51	40	38	250	-	30.3					
	3232B-4	32	32	30.4	200	45	26.5	10	Fig. 1	CGIA-4R		
	4332B-4	43	32	30	200	-	26.3		Fig. 2			
	5140B-4	51	40	38	250	-	30.3					
	5640B-5	56	40	38	250	-	35.3	15	Fig. 2	CGIA-5R		
	6650B-5	66	50	48	250	-	40.3					

KIGM内径切槽刀杆

	型号	DMIN	DCON	H	LF	适用刀片	紧固螺栓	扳手
	KIGMR/L2016B-3V	20	16	15	200	GMM	HH5X15	LW-4
	KIGMR/L2520B-3V	25	20	19	200	GMM		
	KIGMR/L3525B-3V	35	25	23.5	200	GMM		
	KIGMR/L3525B-4V	35	25	23.5	200	GMM		
	KIGMR/L4032B-4V	40	32	30	200	GMM		

GVF

形状		型号		尺寸 Dimension (mm)			材质 Grade recommended			
							Uncoated grade	PVC coating grade		Ceramic
图示方向为右手（R）刀		Type		W	B	r ε	YL10	YL740	YL930	YL60
		GVFR/L	100-005AA	1.00	2.2	0.05	●	○	●	○
			150-005AA	1.50			●	○	●	○
			200-005AA	2.00			●	○	●	○
			250-005AA	2.50			●	○	●	○
			300-005AA	3.00			●	○	●	○
		GVFR/L	200-020A	2.00	2.3	0.2	●	○	●	○
			230-020A	2.30	2.3	0.2	●	○	●	○
			250-020A	2.50	2.3	0.2	●	○	●	○
			270-020A	2.70	2.3	0.2	●	○	●	○
			290-020A	2.90	2.3	0.2	●	○	●	○
			340-020A	3.40	2.3	0.2	●	○	●	○
	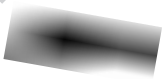	GVFR/L	200-020B	2.00	4.8	0.2	●	○	●	○
			250-020B	2.50	4.8	0.2	●	○	●	○
			300-020B	3.00	4.8	0.2	●	○	●	○
			350-020B	3.50	4.8	0.2	●	○	●	○
			400-020B	4.00	5.3	0.2	●	○	●	○
			430-020B	4.30	5.3	0.2	●	○	●	○
			460-020B	4.60	5.3	0.2	●	○	●	○
			490-020B	4.90	5.3	0.2	●	○	●	○
		GVFR/L	300-040C	3.00	6.8	0.4	●	○	●	○
			350-040C	3.50	6.8	0.4	●	○	●	○
			400-040C	4.00	6.8	0.4	●	○	●	○
			450-040C	4.50	6.8	0.4	●	○	●	○
			500-040C	5.00	8.3	0.4	●	○	●	○
			550-040C	5.50	8.3	0.4	●	○	●	○
			600-040C	6.00	8.3	0.4	●	○	●	○
		GVFR/L	200-100AR	2.00	2.3	1.00	●	○	●	○
			250-125AR	2.50	2.3	1.25	●	○	●	○
			300-150AR	3.00	2.3	1.50	●	○	●	○
			300-150BR	3.00	4.8	1.50	●	○	●	○
			400-200BR	4.00	5.3	2.00	●	○	●	○
			300-150CR	3.00	6.8	1.50	●	○	●	○
			400-200CR	4.00	6.8	2.00	●	○	●	○

GIFV 型

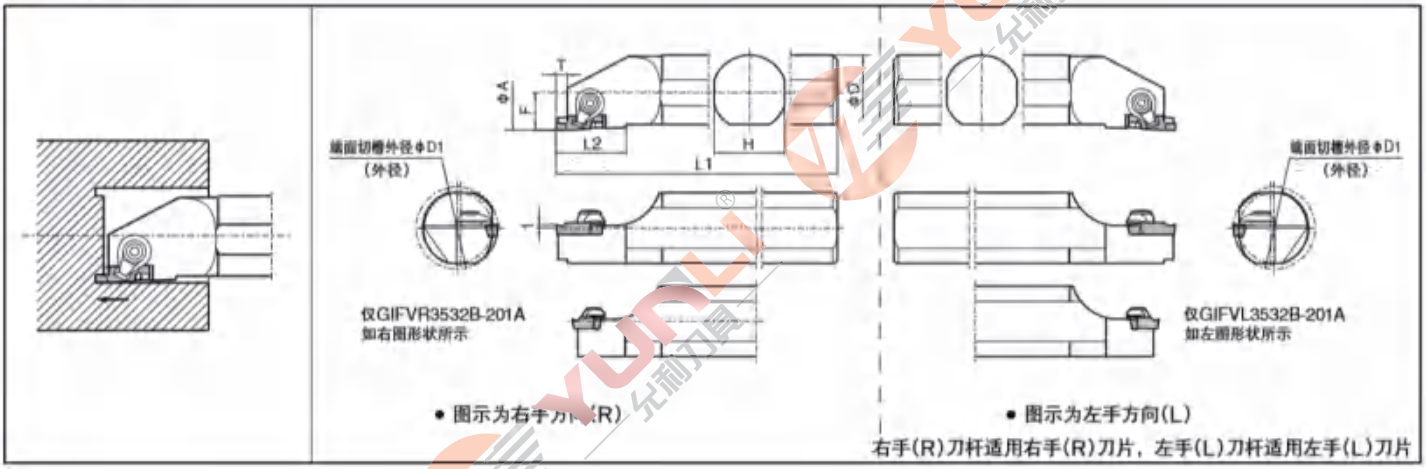

型号			尺寸(mm)							端面切槽外径 ΦD1		零件			适用刀片	库存	
												紧固螺钉		扳手			
The basic shape of inserts			ΦA	ΦD	H	L1	L2	F	T	MIN.	MAX.					R	L
	GIFVR/L	1612M-201A	16	12	11	150	23	16	2.2	35(12)	∞	CPS-5V	-	FT-15	GVFR/L.....A GVFR/L.....AR	●	●
		2016Q-201A	20	16	15	180										●	●
		2220Q-201A	22	20	18	180										●	●
		2825R-201A	28	25	23	200										●	●
		3532B-201A	35	32	30	250										●	●
	GIFVR/L	2016Q-201B	20	16	15	180	30	16	4.6	35	50	-	CPS-6V	FT-16	GVFR/L250-350-020B GVFR/L300-150BR	●	●
		2220Q-201B	22	20	18	180										●	●
		2825R-201B	28	25	23	200										●	●
		3532B-351B	35	32	30	250										●	●
	GIFVR/L	3532B-352B	35	32	30	250	30	16	5.1	35	50	-	CPS-8V	FT-17	GVFR/L400-490-020B	●	●
										(25)	(∞)				GVFR/L400-200BR	●	●
	GIFVR/L	5032B-501B	50	32	30	250	30	16	4.6	50	70	-	CPS-8V	FT-17	GVFR/L250-350-020B	●	●
										(25)	(∞)				GVFR/L300-150BR	●	●
	GIFVR/L	5032B-502B	50	32	30	250	30	16	5.1	50	70	-	CPS-8V	FT-17	GVFR/L400-490-020B	●	●
										(25)	(∞)				GVFR/L400-200BR	●	●
	GIFVR/L	5032B-501C	50	32	35	250	35	16	6.6	50	70	-	CPS-8V	FT-17	GVFR/L350-450-040C	●	●
										(25)	(∞)					●	●
	GIFVR/L	5032B-502C	50	32	35	250	35	16	8.1	50	70	-	CPS-8V	FT-17	GVFR/L500-600-040C	●	●
										(25)	(∞)					●	●

GFV 型

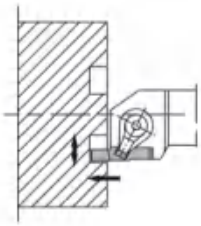

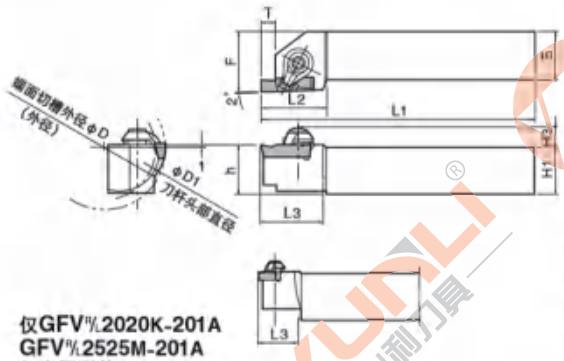

仅GFV%2020K-201A
GFV%2525M-201A
如右图形状。

• 图示为右手方向(R)

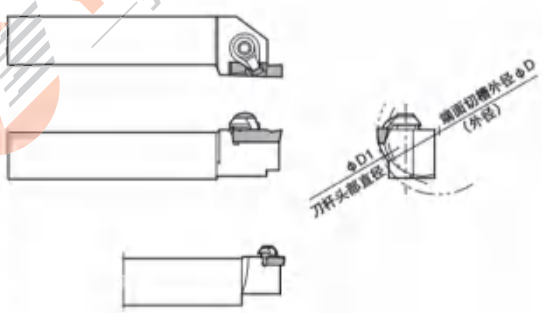

• 图示为左手方向(L)

右手(R)刀杆适用右手(R)刀片，左手(L)刀杆适用左手(L)刀片

GFVS 型

通过更换刀板该刀杆可以对应各种端面切槽直径

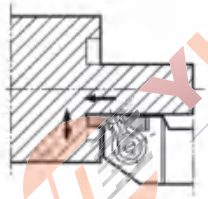

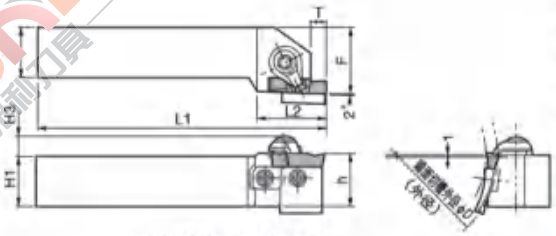

• 图示为右手方向(R)

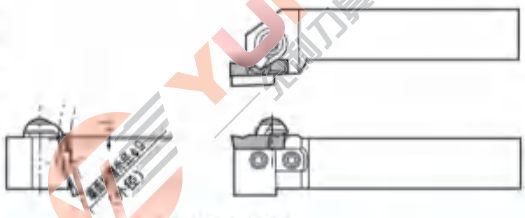

• 图示为左手方向(L)

右手(R)刀杆适用左手(L)刀片，左手(L)刀杆适用右手(R)刀片

GFVT 型

通过更换刀板该刀杆可以对应各种端面切槽直径

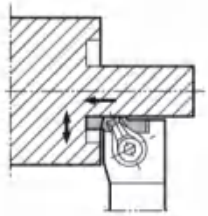

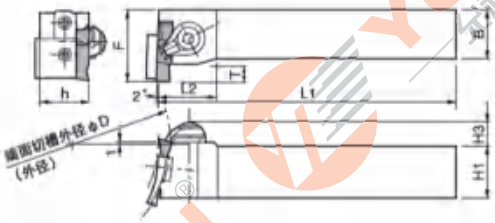

• 图示为右手方向(R)

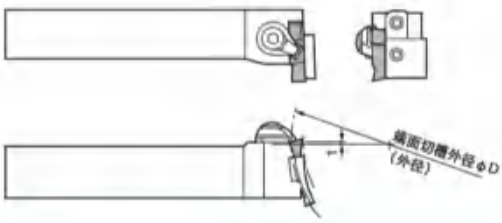

• 图示为左手方向(L)

右手(R)刀杆适用左手(L)刀片，左手(L)刀杆适用右手(R)刀片

型号			尺寸(mm)										端面切槽外径 ΦD		库存	
The basic shape of inserts			H1	h	H3	B	L1	L2	L3	F	T	ΦD1	MIN	MAX	R	L
	GFVR/L	1210K-201A	12	13	6.5	10	125	20	9	16	2.2	40	20	∞	●	●
		1212K-201A	12	13	6.5	12	125	20	11	18	2.2		(10)	∞	●	●
		1616K-201A	16	17	6.5	16	125	20	15	20	2.2		20	∞	●	●
		2020K-201A	20	21	6.5	20	125	20	19	25	2.2		20	∞	●	●
		2525M-201A	25	26	6.5	25	150	23	22	32	2.2		(12)		●	●
	GFVR/L	1212K-351B	12	13	8.0	12	125	28	22	21	4.6	35	35	50	●	●
		1616K-351B	16	17	8.0	16	125	28	24	23	4.6				●	●
		2020K-351B	20	21	8.0	20	125	28	26	25	4.6				●	●
		2525M-351B	25	26	8.0	25	150	30	28	32	4.6				●	●
		2020K-352B	20	21	8.0	20	125	28	26	25	5.1		(25)	(∞)	●	●
		2525M-352B	25	26	8.0	25	150	30	28	32	5.1				●	●
		2020K-501B	20	21	8.0	20	125	28	26	25	4.6	50	50	70	●	●
		2525M-501B	25	26	8.0	25	150	30	28	32	4.6				●	●
		2020K 502B	20	21	8.0	20	125	28	26	25	5.1		(25)	(∞)	●	●
		2525M-502B	25	26	8.0	25	150	30	28	32	5.1				●	●
		2020K-701B	20	21	8.0	20	125	28	26	25	4.6	70	70	100	●	●
		2525M-701B	25	26	8.0	25	150	30	28	32	4.6				●	●
		2020K-702B	20	21	8.0	20	125	28	26	25	5.1		(25)	(∞)	●	●
		2525M-702B	25	26	8.0	25	150	30	28	32	5.1				●	●
	GFVR/L	2020K-501C	20	21	9.5	20	125	32	30	32	6.6	50	50	70	●	●
		2525M-501C	25	26	9.5	25	150	35	33	32	6.6				●	●
		2020K-502C	20	21	9.5	20	125	32	30	32	8.1		(25)	(∞)	●	●
		2525M-502C	25	26	9.5	25	150	35	33	32	8.1				●	●
		2020K-701C	20	21	9.5	20	125	32	30	32	6.6	70	70	100	●	●
		2525M-701C	25	26	9.5	25	150	35	33	32	6.6				●	●
		2020K-702C	20	21	9.5	20	125	32	30	32	8.1		(25)	(∞)	●	●
		2525M-702C	25	26	9.5	25	150	35	33	32	8.1				●	●
		2020K-1001C	20	21	9.5	20	125	32	30	32	6.6	100	100	150	●	●
		2525M-1001C	25	26	9.5	25	150	35	35	32	6.6				●	●
		2020K-1002C	20	21	9.5	20	125	32	32	32	8.1		(25)	(∞)	●	●
		2525M-1002C	25	26	9.5	25	150	35	35	32	8.1				●	●
		2020K-1501C	20	21	9.5	20	125	32	32	32	6.6	150	150	250	●	●
		2525M-1501C	25	26	9.5	25	150	35	35	32	6.6				●	●
		2020K-1502C	20	21	9.5	20	125	32	32	32	8.1		(25)	(∞)	●	●
		2525M-1502C	25	26	9.5	25	150	35	35	32	8.1				●	●

YUNLI 允利刀具

型号			尺寸(mm)								端面切槽外径 ΦD		库存	
			H1	h	H3	B	L1	L2	F	T	MIN	MAX	R	L
	GFVSR/L	2020K-351B	20	21	8.0	20	125	30	25	5.1	35	50	●	●
		2525M-351B	25	26		25	150	32	32	(4.6)			●	●
		2020K-352B	20	21		20	125	30	25	5.1	(25)	(∞)	●	●
		2525M-352B	25	26		25	150	32	32	(5.1)			●	●
		2020K-501B	20	21		20	125	30	25	5.0	50	70	●	●
		2525M-501B	25	26		25	150	32	32	(4.6)			●	●
		2020K-502B	20	21		20	125	30	25	5.1	(25)	(∞)	●	●
		2525M-502B	25	26		25	150	32	32	(5.1)			●	●
		2020K-701B	20	21		20	125	30	25	5.1	70	100	●	●
		2525M-701B	25	26		25	150	32	32	(4.6)			●	●
		2020K-702B	20	21		20	125	30	25	5.1	(25)	(∞)	●	●
		2525M-702B	25	26		25	150	32	32	(5.1)			●	●
	GFVSR/L	2525M-501C	25	26	9.5	25	150	32	32	8.1(6.6)	50	70	●	●
		2525M-502C								8.1(8.1)	(25)	(∞)	●	●
		2525M-701C								8.1(6.6)	70	100	●	●
		2525M-702C								8.1(8.1)	(25)	(∞)	●	●
		2525M-1001C								8.1(6.6)	100	150	●	●
		2525M-1002C								8.1(8.1)	(25)	(∞)	●	●
		2525M-1501C								8.1(6.6)	150	250	●	●
		2525M-1502C								8.1(8.1)	(25)	(∞)	●	●
	GFVSR/L	2020K-08AA	20	20	5.5	20	125	18	25	2.2	8	∞	●	●
		2525M-08AA	25	25		25	150	18	32		(0)	(∞)	●	●
	GFVTR/L	1212JX-351B	12	12	8.0	12	120	14	30	4.6	35	50	●	●
		1616JX-351B	16	16		16	120	18	30	5.1			●	●
		2020K-351B	20	21		20	125	22	30	5.1			●	●
		2525M-351B	25	26		25	150	25	35	(4.6)			●	●
		1616JX-352B	16	17		16	120	18	30	5.1	(25)	(∞)	●	●
		2020K-352B	20	21		20	125	22	30	5.1			●	●
		2525M-352B	25	26		25	150	25	35	(5.1)			●	●
		2020K-501B	20	21		20	125	22	30	5.1	50	70	●	●
		2525M-501B	25	26		25	150	25	35	(4.6)			●	●
		2020K-502B	20	21		20	125	22	30	5.1	(25)	(∞)	●	●
		2525M-502B	25	26		25	150	25	35	(5.1)			●	●
		2020K-701B	20	21		20	125	22	30	5.1	70	100	●	●
		2525M-701B	25	26		25	150	25	35	(4.6)			●	●
		2020K-702B	20	21		20	125	22	30	5.1	(25)	(∞)	●	●
		2525M-702B	25	26		25	150	25	35	(5.1)			●	●
	GFVTR/L	2020M-501C	20	21	8.0	20	150	22	33	8.1(6.6)	50	70	●	●
		2020M-502C								8.1(8.1)	(25)	(∞)	●	●
		2020M-701C								8.1(6.6)	70	100	●	●
		2020M-702C								8.1(8.1)	(25)	(∞)	●	●
		2020M-1001C								8.1(6.6)	100	150	●	●
		2020M-1002C								8.1(8.1)	(25)	(∞)	●	●
		2020M-1501C								8.1(6.6)	150	250	●	●
		2020M-1502C								8.1(8.1)	(25)	(∞)	●	●
	GFVTR/L	2525M-501C	25	26	9.5	25	150	27	38	8.1(6.6)	50	70	●	●
		2525M-502C								8.1(8.1)	(25)	(∞)	●	●
		2525M-701C								8.1(6.6)	70	100	●	●
		2525M-702C								8.1(8.1)	(25)	(∞)	●	●
		2525M-1001C								8.1(6.6)	100	150	●	●
		2525M-1002C								8.1(8.1)	(25)	(∞)	●	●
		2525M-1501C								8.1(6.6)	150	250	●	●
		2525M-1502C								8.1(8.1)	(25)	(∞)	●	●
	GFVTR/L	1010F-08AA	10	10	5.5	10	80	14	25	2.2	8	(∞)	●	●
		1212H-08AA	12	12		12	100	14	25			(∞)	●	●
		1616K-08AA	16	16		16	125	14	25			(∞)	●	●
		2020K-08AA	20	20		20	125	14	25		(0)	(∞)	●	●
		2020K-08AA	20	20		20	125	14	25			∞	●	●
		2525M-08AA	25	25		25	150	14	32			(∞)	●	●

YUNLI 允利刀具

FGV

形状	型号	有效加工深度	最小加工径	尺寸（mm）			库存	
				厚度	w	r ε	R	L
 图示方向为右手（R）刀	FGV100RB00D6	1.5	6.00	2.38	1.0	0.00	●	●
	FGV100RB05D6					0.05	●	●
	FGV150RB00D6	2.0			1.5	0.00	●	●
	FGV150RB05D6					0.05	●	●
	FGV200RB00D6	3.0			2.0	0.00	●	●
	FGV200RB05D6					0.05	●	●
	FGV100LB00D6	1.5	6.00	2.38	1.0	0.00	●	●
	FGV100LB05D6					0.05	●	●
	FGV150LB00D6	2.0			1.5	0.00	●	●
	FGV150LB05D6					0.05	●	●
	FGV200LB00D6	3.0			2.0	0.00	●	●
	FGV200LB05D6					0.05	●	●

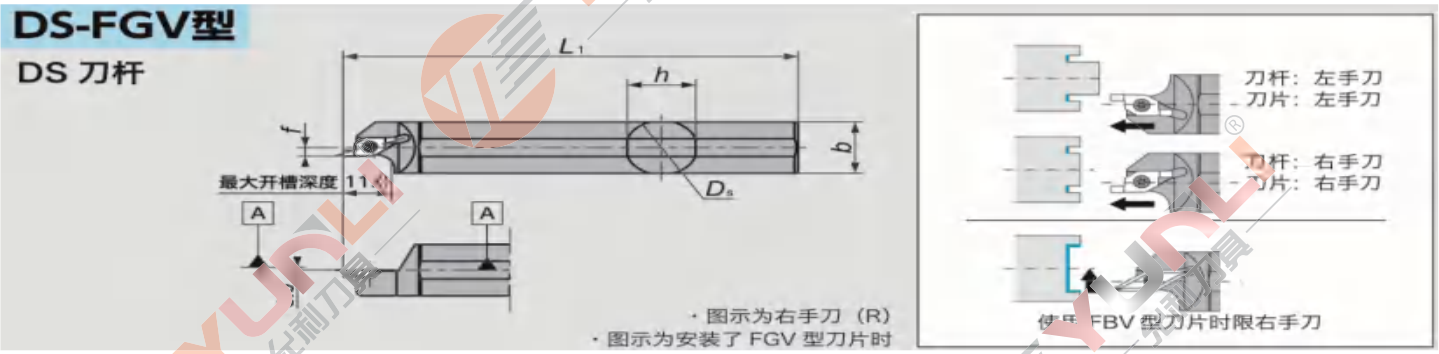

刀杆型号		尺寸（mm）							适用刀片	零部件		库存	
		Ds	h	b	L1	h2	f	L2		紧固螺丝	扳手	R	L
CH-FGVR/L	1010	-	10	10	120	10	10.5	18	FGV FBV	LRIS-2.5X7	CLR-15S	●	●
	1212		12	12		12	12.5					●	●
	1616		16	16		16	16.5					●	●
FGVR/L	1016	-	10	10	120	0	0	20	FGV...L	LRIS-2.5X7	CLR-15S	●	●
	1216		12	12								●	●
	1616		16	16								●	●
DS-FGVR/L	16-012	19.05	15	15	80	-	3	-	FGV FBV	LRIS-2.5X7	CLR-15S	●	●
	19	19.05	18	18	120							●	●
	20	20.00	19	19	120							●	●
	22	22.00	21	21	120							●	●
	25-MFT	25.00	24	24	150							●	●

型号		尺寸(mm)							端面切槽外径 ΦD1		零件		适用刀片	库存	
											紧固螺钉	扳手			
The basic shape of inserts		ΦA	ΦD	H	L	L1	f	T	MIN.	MAX.				R	L
	SGIVFR12M11	13	12	10.4	150	25	6	2.0 - 2.5	13	(∞)	DTS5-3.5	T15	GVFR__	●	●
	SGIVFR14M11	15	14	12.4	150	25	7		15	(∞)				●	●
	SGIVFR16N11	17	16	14.4	160	25	8		17	(∞)				●	●
	SGIVFR16N16	17	16	14.8	160	30	8	2.3 - 4.3	18	(∞)	M4*10	T15	GVFR__	●	●
	SGIVFR20Q16	21	20	18.4	180	30	10		22	(∞)				●	●
	SGIVFR25R16	26	25	23.4	200	30	12.5		27	(∞)				●	●
	SGIVFR32R16	34	32	30.4	200	35	16		35	(∞)				●	●

GER-DM

形状	型号	适用刀杆	端面圆尺寸	尺寸(mm)			库存	
			Dmin-Dmax	S±0.02	B	R	YL10	YL930
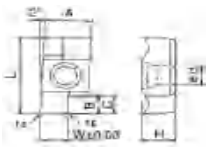	GER100DM06-D	SEGEL1010F-D SEGEL1212H-D SEGEL1616H-D SEGEL2020K-D SEGEL2525M-D	6～∞	1.00	2.5	0.05	●	●
	GER150DM10-D		10～∞	1.50	2.8	0.1	●	●
	GER200DM10-D			2.00	3.5		●	●
	GER250DM15-D		15～∞	2.50	4.5	0.2	●	●
	GER300DM15-D			3.00	4.5		●	●
	GER400DM15-D			4.00	4.5		●	●
	GER150DM10R075-D		10～∞	1.50	2.5	0.75	●	●
	GER200DM10R100-D			2.00	3.5	1.0	●	●
	GER250DM10R125-D		15～∞	2.50	4.5	1.25	●	●
	GER300DM10R150-D			3.00	4.5	1.5	●	●
图示方向为右手（R）刀	GER400DM10R200-D			4.00	4.5	2.0	●	●

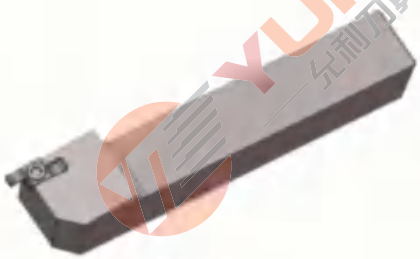

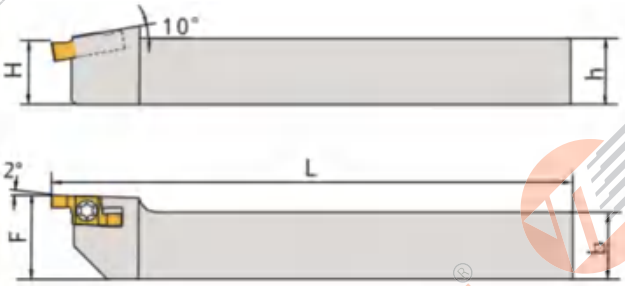

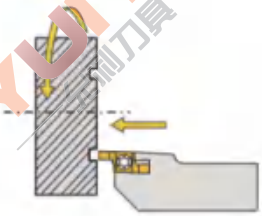

图为左手刀具
Right Cutting Tools(see picture)

注意：左手刀具配GER系列刀片，右手刀具配GEL系列刀片
Note:Left tools match with right inserts;Right tools match with left inserts.

形状	左刀杆	适用刀片	最小加工直径	尺寸(mm)					刀片螺钉	扳手	库存
		右刀片	Dmin	h	b	L	F	H			
	SEGEL1010F-D	GER....-D GER....DM15-D	10	10	10	125	10	10	L60M3.0*8.0	T8	●
	SEGEL1212H-D		12	12	12	125	12	12			●
	SEGEL1616H-D		16	16	16	100	20	16			●
	SEGEL2020K-D		20	20	20	125	25	20			●
	SEGEL2525M-D		25	25	25	150	32	25			●

HFPR3003/4004

形状	型号	规格尺寸（mm）				库存	
		W	M	R	l	YL10	YL930
 图示方向为右手（R）刀	HFPR3003	3.00	2.3	0.30	16.00	●	●
	HFPR4004	4.00	2.8	0.40	16.00	●	●

FGGR4020-04

形状	型号	尺寸（mm）					库存	
		W	r ε	M	L	H	YL10	YL930
	FGGR/L4020-04	4.0	0.4	3.3	20.0	4.3	●	●

VNFGR　TWFGL　TWFGTR/L整体式

- VNFGR0810-10
- VNFGR0820-10
- VNFGR0830-10
- VNFGR0820-10NG
- VNFGR0830-10NB

以上型号参数请参考分体式小径加工刀具系列X19页

- TWFGTR/L050 /080 /100 /125 /150
- TWFGL050 /100 /125 /150 /180 /200

以上型号参数请参考分体式小径加工刀具系列X23页

MIFHR

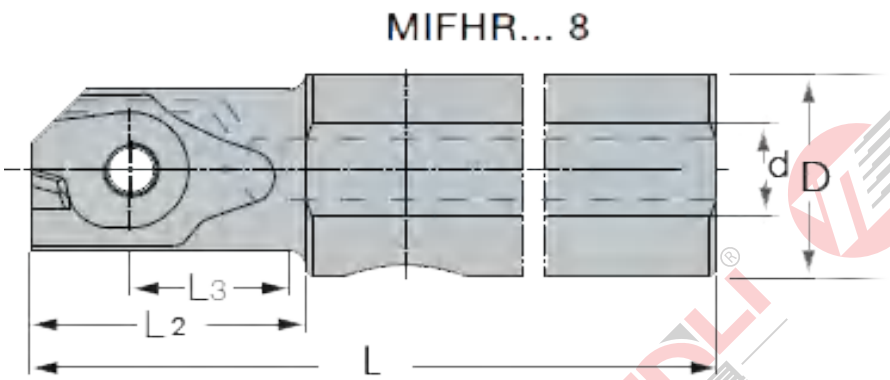

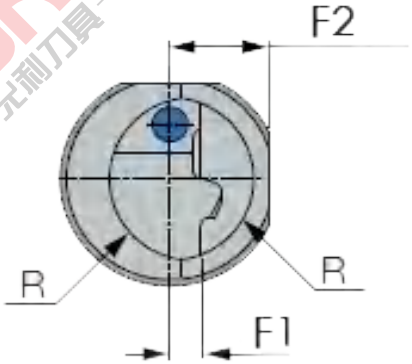

型号	尺寸										
	D	d	f1	f2	L	L3	L2	R	刀片 (Insert)	螺钉 (Screw1)	扳手 (Key)
MIFHR8SC-8-SRK(1)	8.00	1.2	1.4	3.70	75.00	7.40	11.7	3.80	MI.R8	M2.5	T8
MIFHR10C-8	10.00	4.0	1.4	4.50	102.50	7.40	12.5	3.80	MI.R8	M2.5	T8
MIFHR12C-8	12.00	5.0	1.4	5.50	102.50	7.40	12.5	3.80	MI.R8	M2.5	T8
MIFHR12C-10	12.00	6.0	2.4	5.50	90.00	11.20	17.2	4.60	MI.R10	M3.5	T10
MIFHR16C-10	16.00	6.0	2.4	7.50	90.00	11.20	17.2	4.60	MI.R10	M3.5	T10

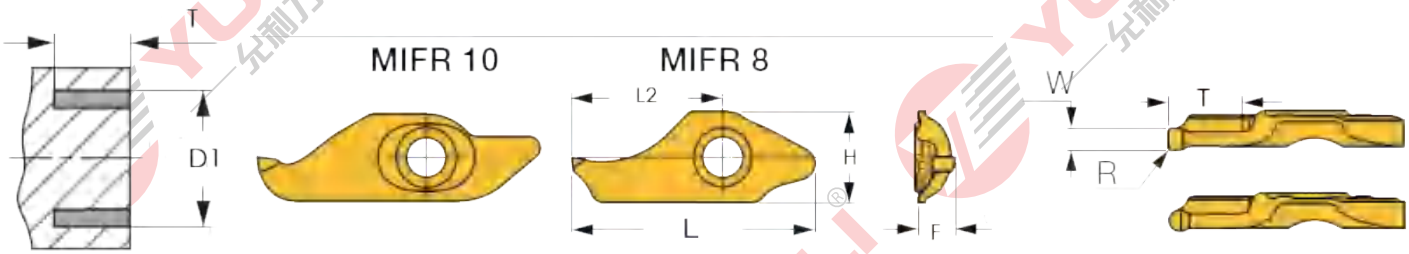

型号	尺 寸									材质	
	L	W±0.02	R±0.02	F	H	D1 min	D1 max	T	L2	YL930	YL10
MIFR8-1.50-0.20	17.7	1.50	0.20	2.6	6.5	8.0	11.5	5.70	11.00	●	●
MIFR8-1.6-0.80	17.7	1.60	0.80	2.6	6.5	8.0	12.1	5.70	11.00	●	●
MIFR8-2.00-0.20	17.7	2.00	0.20	2.8	6.5	8.0	15.1	5.70	11.00	●	●
MIFR8-2.20-0.20	17.7	2.20	0.20	2.9	6.5	8.0	17.0	5.70	11.00	●	●
MIFR10-2.00-1.00	25.1	2.00	1.00	2.4	6.5	10.0	30.0	9.00	14.80	●	●
MIFR10-2.50-0.20	25.1	2.50	0.20	3.1	7.6	10.0	30.0	9.00	14.80	●	●
MIFR10-3.00-0.20	25.1	3.00	0.20	3.4	7.6	10.0	25.0	9.00	14.80	●	●
MIFR10-3.00-1.50	25.1	3.00	1.50	3.3	7.6	10.0	35.0	9.00	14.80	●	●
订货示例：MIFR8-1.6-0.80 YL930　接受非标定制　● 为标准库存　○ 为非标准库存											

FC1604R端面槽刀片

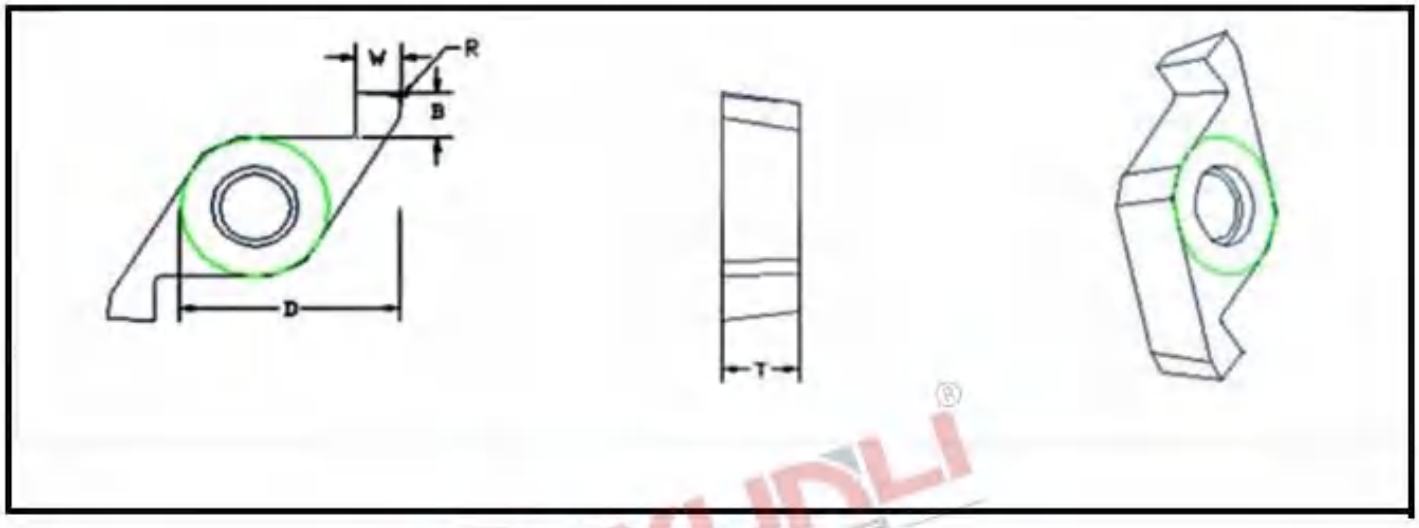

刀片尺寸

型号	槽宽	切深	R角	尺寸大小	刀片宽度	YL10	YL740	YL930
FC1604R/L100	1.0	1.5	0.2	14.150	4.98	●	○	●
FC1604R/L150	1.5	1.6	0.2	14.150	4.98	●	○	●
FC1604R/L200	2.0	1.8	0.2	14.150	4.98	●	○	●
FC1604R/L250	2.5	2.3	0.2	14.150	4.98	●	○	●
FC1604R/L300	3.0	3.0	0.2	14.150	4.98	●	○	●

GRIP

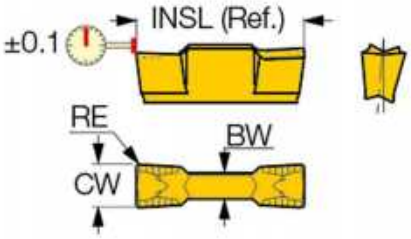

尺寸 (mm)												型号			
CW	RE	CWTOL	RETOL	INSL	BW	ap (min)	ap (max)	ft (min)	ft (max)	fg (min)	fg (max)		YL10	YL740	YL930
3.00	0.20	0.050	0.050	15.80	2.30	0.25	1.80	0.14	0.18	0.07	0.11	GRIP 3002Y	●	●	○
3.00	0.30	0.050	0.050	15.80	2.30	0.40	1.80	0.15	0.19	0.07	0.11	GRIP 3003Y	●	●	○
4.00	0.40	0.050	0.050	19.00	2.80	0.50	2.40	0.18	0.24	0.09	0.15	GRIP 4004Y	●	●	○
5.00	0.50	0.050	0.050	19.00	3.30	0.60	3.00	0.20	0.30	0.11	0.20	GRIP 5005Y	●	●	○
6.00	0.50	0.050	0.050	19.00	4.20	0.60	3.60	0.22	0.36	0.13	0.23	GRIP 6005Y	●	●	○

单头PSB型 内径加工(整体型)

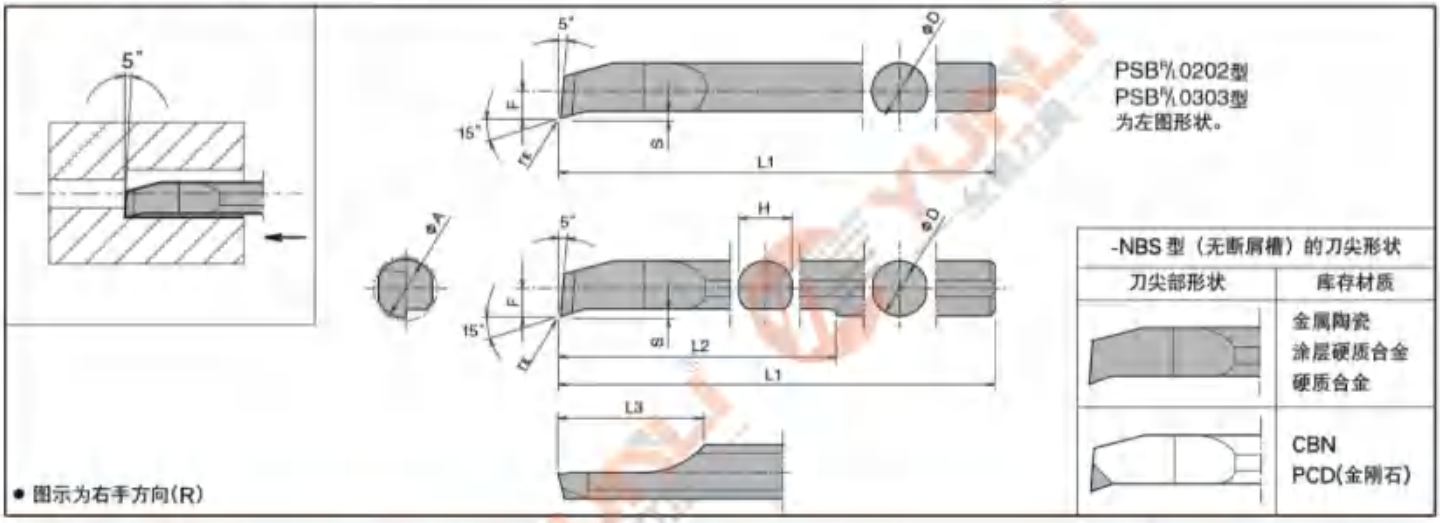

型状 The basic shape of inserts	型号 Ordering Code	最小加工径 ØA	尺寸Dimensions(mm) ±*	ØD	H	L1	L2	L3	F	S	材质Grade YL10	YG80	YG40
	PSBR/L0202-005	2	±0.13 0.05	1.8	-	50	-	5	0.9	0.25	●	●	●
	PSBR/L0303-005	3		2.8	-	50	-	7	1.4	0.3	●	●	●
	PSBR/L0404-005	4		3.8	3.6	60	30	10	1.9	0.5	●	●	●
	PSBR/L0505-005	5		4.8	4.4	70	40	12	2.4	0.5	●	●	●
	PSBR/L0606-005	6		5.8	5.2	70	45	12	2.9	0.5	●	●	●
	PSBR/L0707-005	7		6.8	6.2	80	50	12	3.4	0.5	●	●	●
	PSBR/L0202-005NB	2		1.8	-	50	-	5	0.9	0.25	●	●	●
	PSBR/L0303-005NB	3		2.8	-	50	-	7	1.4	0.3	●	●	●
	PSBR/L0404-005NB	4		3.8	3.6	60	30	10	1.9	0.5	●	●	●
	PSBR/L0505-005NB	5		4.8	4.4	70	40	12	2.4	0.5	●	●	●
	PSBR/L0606-005NB	6		5.8	5.2	70	45	12	2.9	0.5	●	●	●
	PSBR/L0707-005NB	7		6.8	6.2	80	50	12	3.4	0.5	●	●	●
	PSBTR/L0404-005	4	$^{+0}_{-0.02}$ 0.05	3.8	3.6	60	20	8	1.9	1.0	●	●	●
	PSBTR/L0505-005	5		4.8	4.6	70	20	8	2.4	1.3	●	●	●

刀套详情和选择，请转到L15页。

双头HPB型 内径加工(整体型)

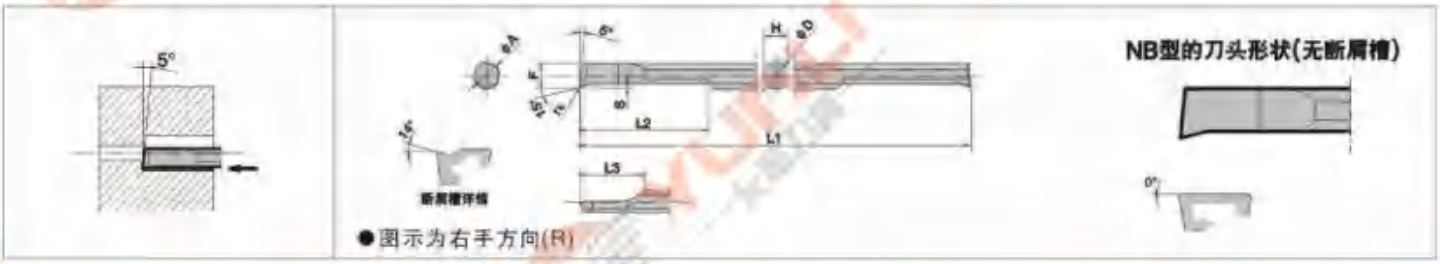

型状 The basic shape of inserts	型号 Ordering Code	最小加工径 ØA	尺寸Dimensions(mm) ±*	ØD	H	L1	L2	L3	F	S	材质Grade YL10	YG80	YG40
	HPBR/L0202-005	2	±0.13 0.05	2	1.7	50	10	5	1.75	0.25	●	●	●
	HPBR/L0303-005	3		3	2.5	50	15	7	2.7	0.3	●	●	●
	HPBR/L0404-005	4		4	3.35	60	20	10	3.65	0.5	●	●	●
	HPBR/L0505-005	5		5	4.3	70	25	12	4.55	0.5	●	●	●
	HPBR/L0606-005	6		6	5.2	70	25	12	5.5	0.5	●	●	●
	HPBR/L0707-005	7		7	6.2	80	25	12	6.45	0.5	●	●	●
	HPBR/L0202-005NB	2		2	1.7	50	10	5	1.75	0.25	●	●	●
	HPBR/L0303-005NB	3		3	2.5	50	15	7	2.7	0.3	●	●	●
	HPBR/L0404-005NB	4		4	3.35	60	20	10	3.65	0.5	●	●	●
	HPBR/L0505-005NB	5		5	4.3	70	25	12	4.55	0.5	●	●	●
	HPBR/L0606-005NB	6		6	5.2	70	25	12	5.5	0.5	●	●	●
	HPBR/L0707-005NB	7		7	6.2	80	25	12	6.45	0.5	●	●	●
	HPBTR/L0404-005	4	$^{+0}_{-0.02}$ 0.05	4	3.35	60	21	8	3.65	1.0	●	●	●
	HPBTR/L0505-005	5		5	4.3	70	26	8	4.55	1.3	●	●	●

刀套详情和选择，请转到L15页。

EZB-HP型 内径加工

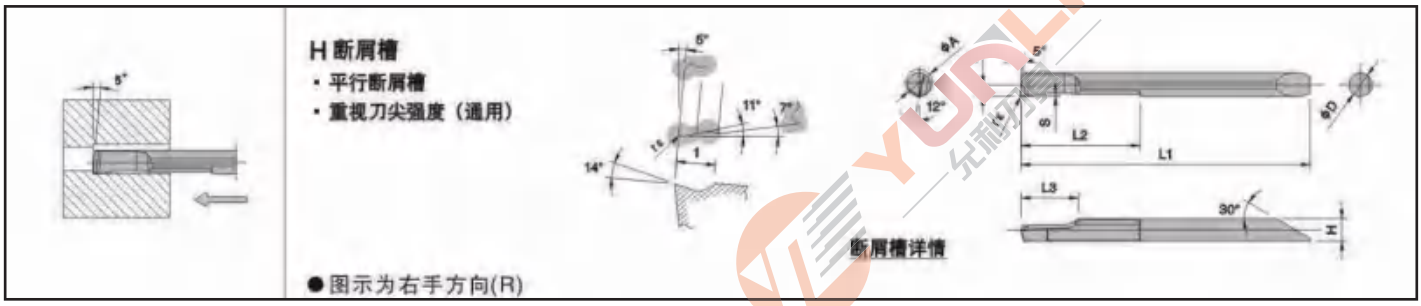

型状 The basic shape of inserts	型号 Ordering Code	最小加工径	尺寸Dimensions(mm)								材质Grade		
		ØA	r_ε	ØD	H	L1	L2	L3	F	S	YL10	YL930	YL740
	EZBR020020HP-008H	2	0.08±0.015	2	1.8	32	8	4.9	0.85	0.25	●	●	●
	EZBR025025HP-008H	2.5	0.08±0.015	2.5	2.3	35	10.5	4.9	1.1	0.25	●	●	●
	EZBR025025HP-015H		0.15±0.02								●	●	●
	EZBR030030HP-008H	3	0.08±0.015	3	2.7	38.9	13	6.9	1.35	0.3	●	●	●
	EZBR030030HP-015H		0.15±0.02								●	●	●
	EZBR035035HP-008H	3.5	0.08±0.015	3.5	3.2	41.9	15	6.9	1.6	0.4	●	●	●
	EZBR035035HP-015H		0.15±0.02								●	●	●
	EZBR040040HP-008H	4	0.08±0.015	4	3.6	48.8	20	9.8	1.85	0.4	●	●	●
	EZBR040040HP-015H		0.15±0.02								●	●	●
	EZBR050050HP-008H	5	0.08±0.015	5	4.6	58.1	25	9.8	2.35	0.5	●	●	●
	EZBR050050HP-015H		0.15±0.02								●	●	●
	EZBR060060HP-008H	6	0.08±0.015	6	5.6	66.1	30	11.8	2.85	0.6	●	●	●
	EZBR060060HP-015H		0.15±0.02								●	●	●
	EZBR020020HP-005F	2	0.15±0.01	2	1.8	32	8	4.9	0.85	0.25	●	●	●
	EZBR025025HP-005F	2.5	0.15±0.01	2.5	2.3	35	10.5	4.9	1.1	0.3	●	●	●
	EZBR025025HP-015F		0.15±0.02								●	●	●
	EZBR030030HP-005F	3	0.15±0.01	3	2.7	38.9	13	6.9	1.35	0.4	●	●	●
	EZBR030030HP-015F		0.15±0.02								●	●	●
	EZBR035035HP-005F	3.5	0.15±0.01	3.5	3.2	41.9	15	6.9	1.6	0.5	●	●	●
	EZBR035035HP-015F		0.15±0.02								●	●	●
	EZBR040040HP-005F	4	0.15±0.01	4	3.6	48.8	20	9.8	1.85	0.5	●	●	●
	EZBR040040HP-015F		0.15±0.02								●	●	●
	EZBR050050HP-005F	5	0.15±0.01	5	4.6	58.1	25	9.8	2.35	0.7	●	●	●
	EZBR050050HP-015F		0.15±0.02								●	●	●
	EZBR060060HP-005F	6	0.15±0.01	6	5.6	66.1	30	11.8	2.85	0.9	●	●	●
	EZBR060060HP-015F		0.15±0.02								●	●	●

刀套详情和选择，请转到L15页。

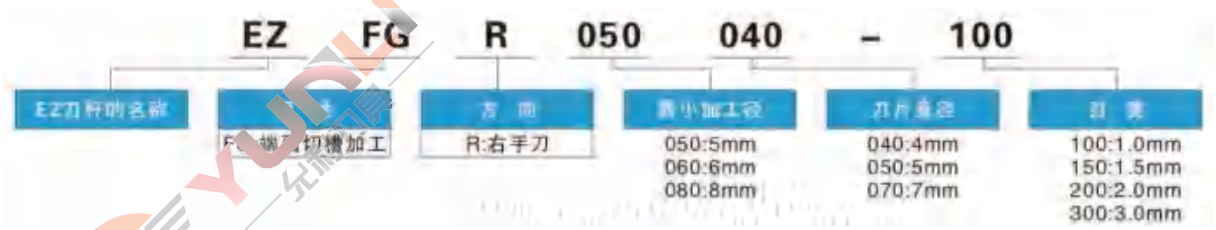

EZB-ST型 内径加工

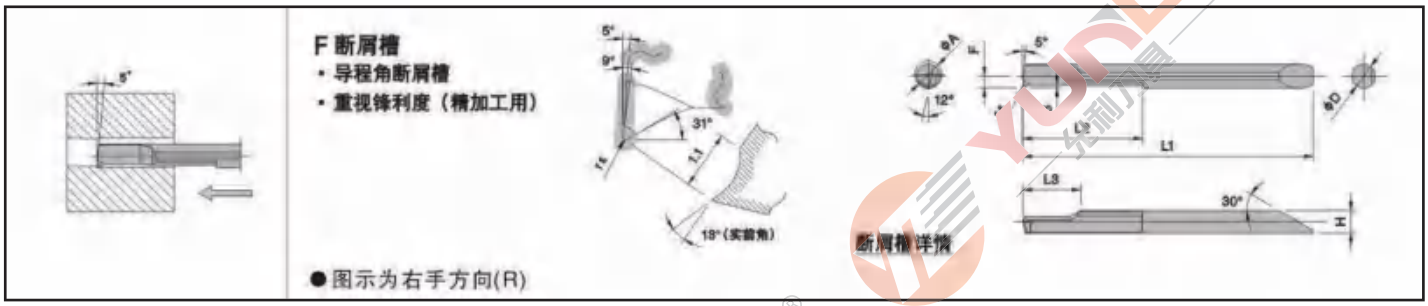

型状 The basic shape of inserts	型号 Ordering Code	最小加工径	尺寸Dimensions(mm)								材质Grade		
		⌀A	r ε	⌀D	H	L1	L2	L3	F	S	YL10	YL930	YL740
	EZBR020017ST-008H	2.0	0.08±0.015	1.7	1.5	27.3	7	4.7	0.79	0.19	●	●	●
	EZBR025020ST-008H	2.5	0.08±0.015	2.0	1.82	32	8	4.8	0.94	0.16	●	●	●
	EZBR025020ST-015H		0.15±0.02								●	●	●
	EZBR030025ST-008H	3.0	0.08±0.015	2.5	2.3	35	10.5	4.8	0.19	0.15	●	●	●
	EZBR030025ST-015H		0.15±0.02								●	●	●
	EZBR035030ST-008H	3.5	0.08±0.015	3.0	2.8	39	13	6.8	1.44	0.18	●	●	●
	EZBR035030ST-015H		0.15±0.02								●	●	●
	EZBR040035ST-008H	4.0	0.08±0.015	3.5	3.3	42	15	6.7	1.69	0.24	●	●	●
	EZBR040035ST-015H		0.15±0.02								●	●	●
	EZBR045040ST-008H	4.5	0.08±0.015	4.0	3.8	49	20	9.7	1.94	0.27	●	●	●
	EZBR045040ST-015H		0.15±0.02								●	●	●
	EZBR055050ST-008H	5.5	0.08±0.015	5.0	4.8	58.2	25	9.7	2.44	0.33	●	●	●
	EZBR055050ST-015H		0.15±0.02								●	●	●
	EZBR065060ST-008H	6.5	0.15±0.01	6.0	5.8	66.2	30	11.8	2.94	0.38	●	●	●
	EZBR065060ST-015H		0.15±0.01								●	●	●
	EZBR075070ST-008H	7.5	0.15±0.02	7.0	6.8	74.2	35	11.7	3.44	0.44	●	●	●
	EZBR075070ST-008H		0.15±0.01								●	●	●
	EZBR020017ST-005F	2.0	0.15±0.02	1.7	1.5	27.3	7	4.7	0.79	0.2	●	●	●
	EZBR025020ST-005F	2.5	0.15±0.01	2.0	1.85	32	8	4.8	0.94	0.16	●	●	●
	EZBR025020ST-015F		0.15±0.02								●	●	●
	EZBR030025ST-005F	3.0	0.15±0.01	2.5	2.3	35	10.5	4.8	0.19	0.2	●	●	●
	EZBR030025ST-015F		0.15±0.02								●	●	●
	EZBR035030ST-005F	3.5	0.15±0.01	3.0	2.8	39	13	6.8	1.44	0.26	●	●	●
	EZBR035030ST-015F		0.15±0.02								●	●	●
	EZBR040035ST-005F	4.0	0.15±0.01	3.5	3.3	42	15	6.7	1.69	0.33	●	●	●
	EZBR040035ST-015F		0.15±0.02								●	●	●
	EZBR045040ST-005F	4.5	0.08±0.015	4.0	3.8	49	20	9.7	1.94	0.31	●	●	●
	EZBR045040ST-015F		0.15±0.02								●	●	●
	EZBR055050ST-005F	5.5	0.08±0.015	5.0	4.8	58.2	25	9.7	2.44	0.45	●	●	●
	EZBR055050ST-015F		0.15±0.02								●	●	●
	EZBR065060ST-005F	6.5	0.08±0.015	6.0	5.8	66.2	30	11.8	2.94	0.59	●	●	●
	EZBR065060ST-015F		0.15±0.02								●	●	●
	EZBR075070ST-005F	7.5	0.08±0.015	7.0	6.8	74.2	35	11.7	3.44	0.65	●	●	●
	EZBR075070ST-015F		0.15±0.02								●	●	●

刀套详情和选择，请转到L15页。

EZB-NB型 内径加工

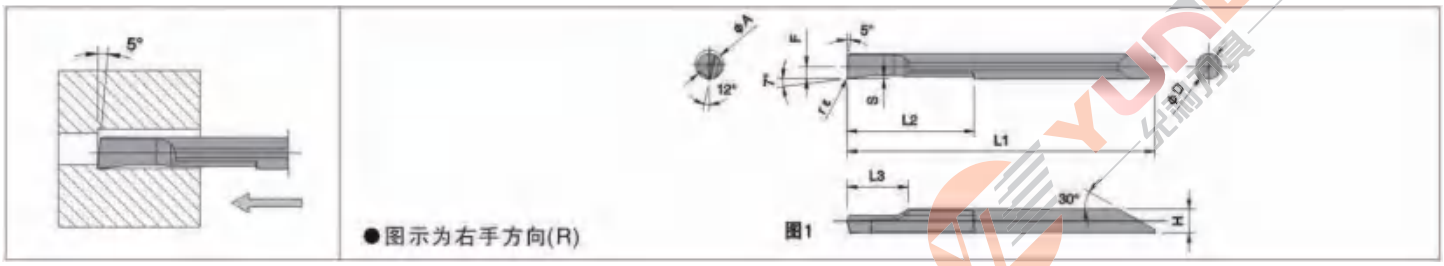

型状 The basic shape of inserts	型号 Ordering Code	最小加工径	尺寸Dimensions(mm)								材质Grade		
		⌀A	r ε	⌀D	H	L1	L2	L3	F	S	YL10	YL930	YL740
	BZBR020017-005NB	2	±0.13 0.05	1.7	1.5	27.3	7	4.7	0.79	0.2	●	●	●
	EZBR025020-005NB	2.5		2	1.82	32	8	4.8	0.94	0.16	●	●	●
	EZBR030025-005NB	3		2.5	2.3	35	10.5	4.8	1.19	0.16	●	●	●
	EZBR035030-005NB	3.5		3	2.8	39	13	6.8	1.44	0.19	●	●	●
	EZBR040035-005NB	4		3.5	3.3	42	15	6.7	1.69	0.25	●	●	●
	EZBR045040-005NB	4.5		4	3.8	49	20	9.7	1.94	0.28	●	●	●
	EZBR055050-005NB	5.5		5	4.8	58.2	25	9.7	2.44	0.33	●	●	●
	EZBR065060-005NB	6.5		6	5.8	66.2	30	11.7	2.94	0.39	●	●	●
	EZBR075070-005NB	7.5		7	6.8	74	35	11.7	3.44	0.45	●	●	●

刀套详情和选择，请转到L15页。

PST-S 整体型刀具

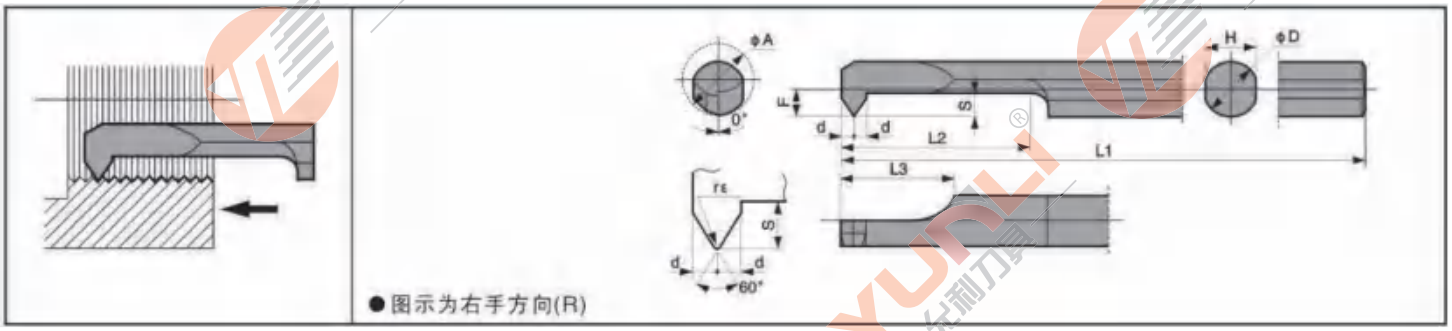

型状 The basic shape of inserts	型号 Ordering Code	最小加工径	尺寸Dimensions(mm)									材质Grade		
		⌀A	r ε	⌀D	H	L1	L2	L3	F	S	D	YL10	YL930	YL740
	PSTR0403-50S	3.5	±0.01 0.05	2.8	2.6	50	15	5.9	1.44	1.20	0.60	●	●	●
	PSTR0604-50S	4.5		3.8	3.6	50	15	6.4	1.94	1.30	0.65	●	●	●
	PSTR0805-60S	5.5		4.8	4.6	60	20	7.4	2.44	1.60	0.80	●	●	●
	PSTR1006-60S	6.5		5.8	5.6	60	20	8.4	2.94	2.00	1.00	●	●	●
	PSTR1007-70S	7.5		6.8	6.6	70	25	8.9	3.44	2.00	1.00	●	●	●

刀套详情和选择，请转到L15页。

HPT型 小内径螺纹加工

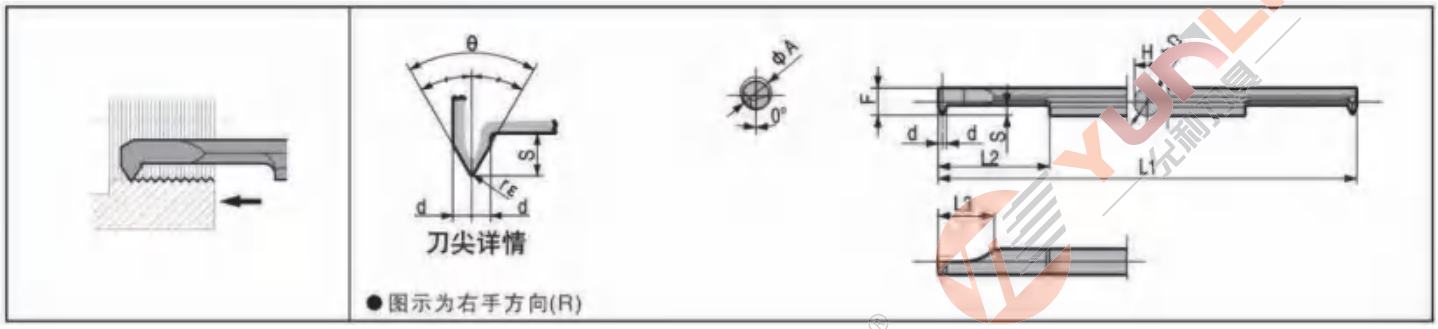

型号		最小预钻孔径ΦA	尺寸(mm) ΦD	H	L1	L2	L3	F	S	d	rε	θ	适用螺纹 公制螺纹 螺纹称呼	螺距（mm）	英制螺纹 螺纹称呼	螺距（牙/英寸）	库存 YL10	YL930
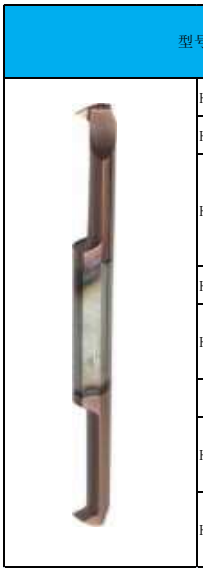	HPTR 04003-60-005	3.5	3	2.7	60	15	6	2.9	1.2	0.5	+0 -0.02 0.05	60°					●	●
	HPTR 04504-60-005	4.5	4	3.7	60	15	8	3.9	1.3	0.6			M6以上	P0.75～P1.25	1/4-20UNC1/4-28UNF以上	28～20	●	●
	HPTR 06005-60-005	6	5	4.6	70	21	8	4.9	1.6	0.75			M8以上 M10以上	P0.75～P1.50 P0.75～P1.50	5/16-18UNC 5/16-24UNF以上	24～18	●	●
	HPTR 06506-60-005	6.5	6	5.6	70		10	5.9	2	0.75							●	●
	HPTR 07507-60-005	7.5	7	6.4	70	26	10	6.9	2.0	0.8					3/8-16UNF 3/8-24UNF以上	24～16	●	●
													惠氏螺纹		管用平行螺纹 锥度管螺纹		●	●
	HPTR 06005-55-010	6	5	4.6	70	21	8	4.9	1.6	0.8	+0 -0.02	55°	W10牙24以上	24～20	G1/16以上 R1/16以上	28	●	●
	HPTR 08007-55-010	8	7	6.4	80	26	10	6.9	2.0	1.0	0.1		W11牙20以上	20～18	G1/18以上 R1/18以上	28,19	●	●

刀套详情和选择，请转到L15页。

EZT型

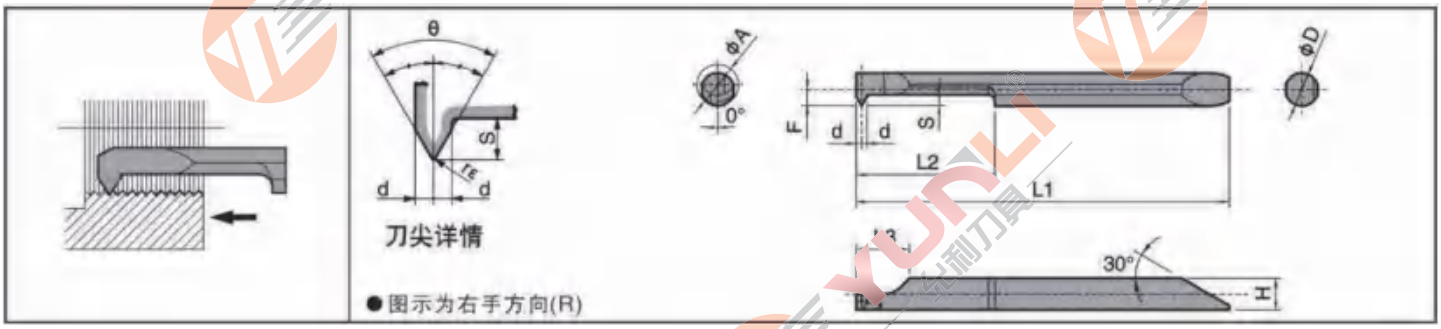

型状 The basic shape of inserts	型号 Ordering Code	最小加工径 ⌀A	尺寸Dimensions(mm) rε	⌀D	H	L1	L2	L3	F	S	D	θ	材质Grade YL10	YL930	YL740
	EZTR030025-60-002	3.0	±0.01 0.05	2.5	2.3	35.0	6.5	5.4	1.19	1.0	0.50	60°	●	●	●
	EZTR035030-60-002	3.5		3.0	2.8	39.0	9.0	5.9	1.44	1.2	0.60		●	●	●
	EZTR040035-60-004	4.0	±0.01 0.04	3.5	3.3	42.0	11.0	5.9	1.69	1.2	0.60		●	●	●
	EZTR050040-60-004	5.0		4.0	3.85	45.0	16.0	6.4	1.94	1.3	0.65		●	●	●
	EZTR060050-60-004	6.0		5.0	4.8	53.2	20.0	7.4	2.44	1.6	0.80		●	●	●
	EZTR070060-60-004	7.0		6.0	5.8	61.2	25.0	8.4	2.94	2.0	1.00		●	●	●
	EZTR060050-55-008	6.0	±0.01 0.08	5.0	4.8	53.2	20.0	7.4	2.44	1.6	0.80	55°	●	●	●
	EZTR080070-55-008	8.0		7.0	6.8	64.2	25.0	8.9	3.44	2.0	1.00		●	●	●
	EZTR04504-60-005	4.5	±0.01 0.05	4.0	3.7	60.0	16.0	8.0	3.90	1.3	0.60	60°	●	●	●
	EZTR06005-60-005	6.0		5.0	4.6	70.0	21.0	8.0	4.90	1.6	0.80		●	●	●
	EZTR06007-60-005	7.5		7.0	6.4	80.0	26.0	10.0	6.90	2.0	1.00		●	●	●
	EZTR06005-55-010	6.0	±0.01 0.01	5.0	4.6	70.0	21.0	8.0	4.90	1.6	0.80	55°	●	●	●
	EZTR08007-55-010	8.0		7.0	6.4	80.0	26.0	10.0	6.90	2.0	1.00		●	●	●

刀套详情和选择，请转到L15页。

小内径切槽PSG型 小口内径端面切槽加工

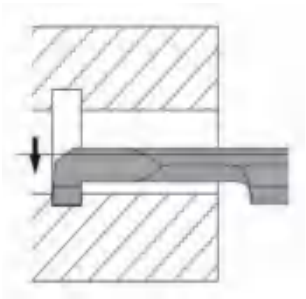

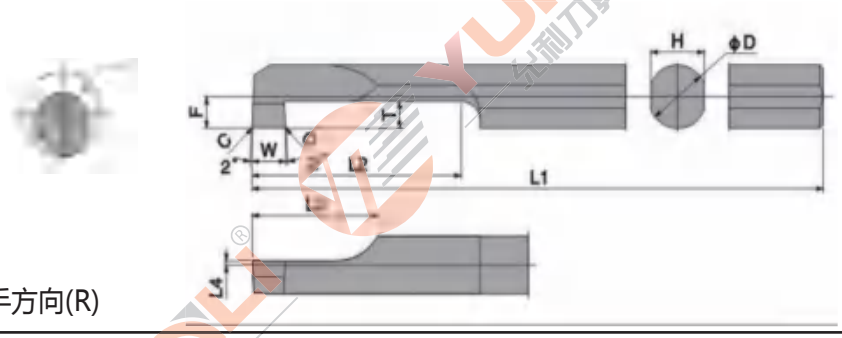

● 图示为右手方向(R)

型状 The basic shape of inserts	型号 Ordering Code	最小加工径	尺寸Dimensions(mm)										材质Grade		
		⌀A	W±0.03	C	⌀D	H	L1	L2	L3	L4	F	T	YL10	YL930	YL740
	PSG0510-60S	5	1.0	0.05	3.8	3.6	60	15	8	0.1	1.86	1.5	●	●	●
	PSG0520-60S		2.0	0.1									●	●	●
	PSG0610-70S	6	1.0	0.05	4.8	4.4	70	20		0.3	2.36	2.0	●	●	●
	PSG0620-70S		2.0	0.05									●	●	●
	PSG0710-70S	7	1.0	0.1	5.8	5.2	70	20	10	0.3	2.86	2.0	●	●	●
	PSG0720-70S		2.0	0.05									●	●	●
	PSG0810-70S	8	1.0	0.1	6.8	6.2	80	25			3.38		●	●	●
	PSG0820-70S		2.0	0.1									●	●	●

刀套详情和选择，请转到L15页。

小内径切槽HPG型 小内径切槽加工

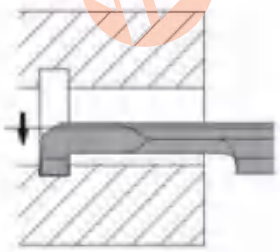

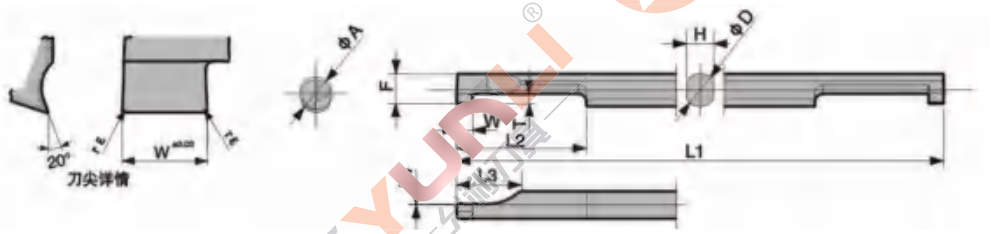

● 图示为右手方向(R)

型状 The basic shape of inserts	型号 Ordering Code	最小加工径	尺寸Dimensions(mm)										材质Grade		
		⌀A	W±0.03	r ε	⌀D	H	L1	L2	L3	L4	F	T	YL10	YL930	YL740
	HPGR/L0404-10	4	1	+0 -0.02 0.05	4	3.35	60	15	8	0	3.35	1	●	●	●
	HPGR/L0404-20		2										●	●	●
	HPGR/L0505-10	5	1		5	4.3	70	20			4.3	1.5	●	●	●
	HPGR/L0505-20		2										●	●	●
	HPGR/L0606-10	6	1		6	5.2			10		5.2	2	●	●	●
	HPGR/L0606-20		2										●	●	●
	HPGR/L0707-10	7	1		7	6.2	80	25			6.2		●	●	●
	HPGR/L0707-20		2										●	●	●

刀套详情和选择，请转到L15页。

PSFG-S型 整体型刀具

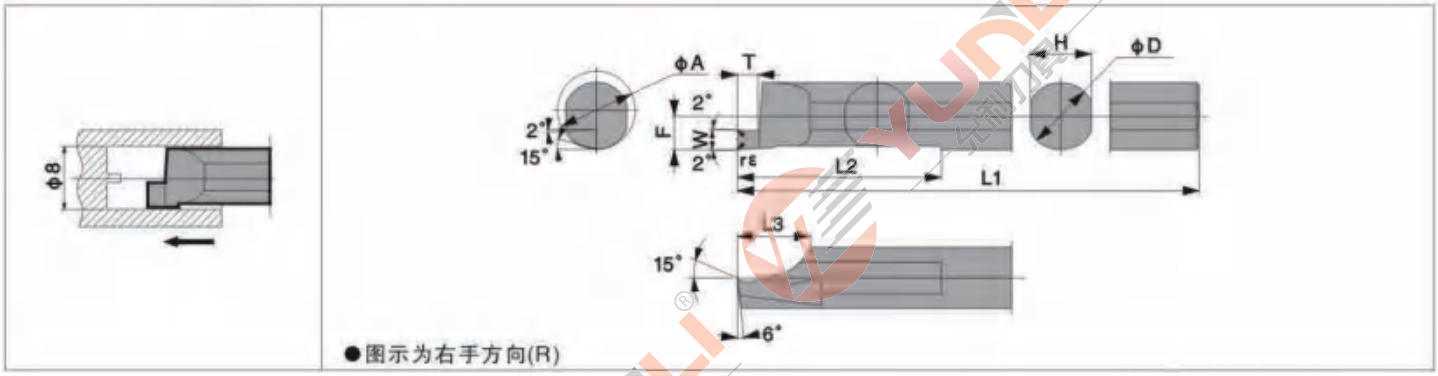

型状 The basic shape of inserts	型号 Ordering Code	最小加工径⌀A		尺寸Dimensions(mm)									材质Grade		
		min	max	W±0.03	rε	⌀D	H	L1	L2	L3	F	T	YL10	YL930	YL740
	PSFG/L0810-20S	8(0)	8(∞)	1	0.05	6.8	6.2	80	25.5	7	3.4	2	●	●	●
	PSFG/L0820-21S			2									●	●	●
	PSFG/L0830-22S			3									●	●	●

刀套详情和选择，请转到L15页。

HPFG型 整体型刀具

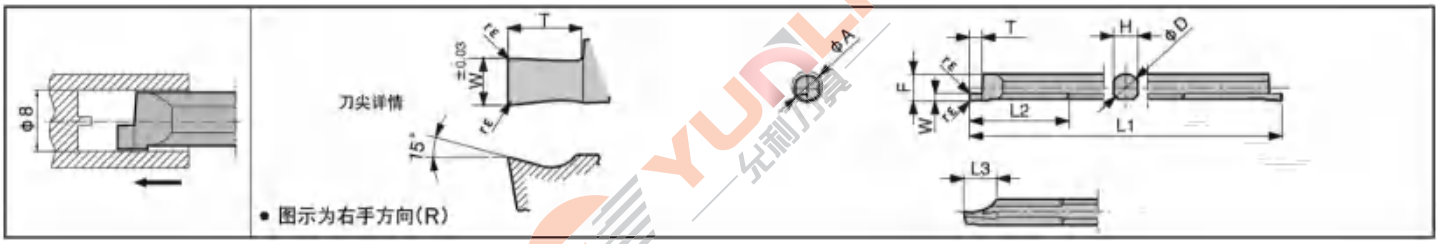

型状 The basic shape of inserts	型号 Ordering Code	最小加工径⌀A		尺寸Dimensions(mm)									材质Grade		
		min	max	W±0.03	rε	⌀D	H	L1	L2	L3	F	T	YL10	YL930	YL740
	HPFG/L0807-10	8(0)	8(∞)	1	+0 -0.02 0.05	7	6.2	80	25	8.5	6.9	2	●	●	●
	HPFG/L0807-20			2								3	●	●	●
	HPFG/L0807-30			3									●	●	●

刀套详情和选择，请转到L15页。

双头小型镗刀

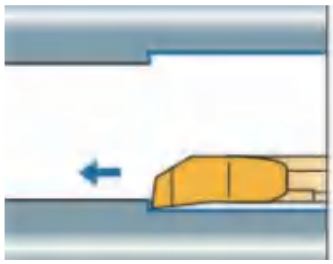

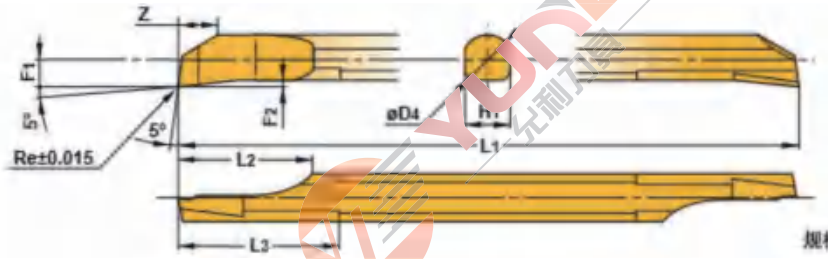

形状	型号	最小加工直径（mm）		刀柄尺寸（mm）								
		I/d≦3	I/d＞3	Re	D4	L1	L2	L3	F1	F2	H1	Z
	CB02RS	2.2	3.6	0.05	2	50	5	6	1	0.25	1.8	1.4
	02RS-B	2.2	3.9	0.05	2	50	5	6	1	0.25	1.8	1.4
	02RS-01	2.2	3.6	0.1	2	50	5	6	1	0.25	1.8	1.4
	02RS-01B	2.2	4.2	0.1	2	50	5	6	1	0.25	1.8	1.4
	02RS-02	2.2	3.6	0.2	2	50	5	6	1	0.25	1.8	1.4
	02RS-02B	2.2	4.9	0.2	2	50	5	6	1	0.25	1.8	1.4
	03RS	3.2	4.2	0.05	3	50	7.5	9	1.5	0.35	2.7	2.3
	03RS-B	3.2	4.4	0.05	3	50	7.5	9	1.5	0.35	2.7	2.3
	03RS-01	3.2	4.2	0.1	3	50	7.5	9	1.5	0.35	2.7	2.3
	03RS-01B	3.2	4.5	0.1	3	50	7.5	9	1.5	0.35	2.7	2.3
	03RS-02	3.2	4.2	0.2	3	50	7.5	9	1.5	0.35	2.7	2.3
	03RS-02B	3.2	4.8	0.2	3	50	7.5	9	1.5	0.35	2.7	2.3
	04RS	4.2	5.1	0.05	4	60	10	12	2	0.45	3.6	3.1
	04RS-B	4.2	5.2	0.05	4	60	10	12	2	0.45	3.6	3.1
	04RS-01	4.2	5.1	0.1	4	60	10	12	2	0.45	3.6	3.1
	04RS-01B	4.2	5.3	0.1	4	60	10	12	2	0.45	3.6	3.1
	04RS-02	4.2	5.1	0.2	4	60	10	12	2	0.45	3.6	3.1
	04RS-02B	4.2	5.5	0.2	4	60	10	12	2	0.45	3.6	3.1
	05RS	5.2	6	0.05	5	70	12.5	15	2.5	0.55	4.5	3.9
	05RS-B	5.2	6.1	0.05	5	70	12.5	15	2.5	0.55	4.5	3.9
	05RS-02	5.2	6	0.2	5	70	12.5	15	2.5	0.55	4.5	3.9
	05RS-02B	5.2	6.4	0.2	5	70	12.5	15	2.5	0.55	4.5	3.9
	CB06RS	6.2	7.2	0.05	6	75	12.5	18	3	0.65	5.4	4.7
	06RS-B	6.2	7.3	0.05	6	75	12.5	18	3	0.65	5.4	4.7
	06RS-02	6.2	7.2	0.2	6	75	12.5	18	3	0.65	5.4	4.7
	06RS-02B	6.2	7.8	0.2	6	75	12.5	18	3	0.65	5.4	4.7
	CB07RS	7.2	8.6	0.05	7	85	12.5	21	3.5	0.75	6.3	5.5
	07RS-B	7.2	8.8	0.05	7	85	12.5	21	3.5	0.75	6.3	5.5
	07RS-02	7.2	8.6	0.2	7	85	12.5	21	3.5	0.75	6.3	5.5
	07RS-02B	7.2	9.2	0.2	7	85	12.5	21	3.5	0.75	6.3	5.5
	CB08RS	8.2	9.5	0.05	8	95	15	24	4	0.85	7.2	6.3
	08RS-B	8.2	9.6	0.05	8	95	15	24	4	0.85	7.2	6.3
	08RS-02	8.2	9.5	0.2	8	95	15	24	4	0.85	7.2	6.3
	08RS-02B	8.2	9.8	0.2	8	95	15	24	4	0.85	7.2	6.3

刀套详情和选择，请转L15页。

小型镗刀

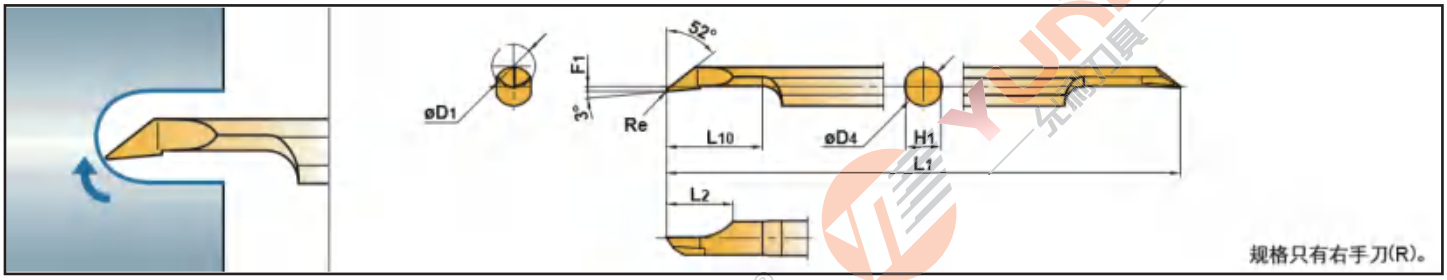

型号		最小加工直径 D1(mm)	刀柄尺寸(mm) Re	D4	L1	L10	L2	F1	H1	库存 YL10	YL930
	CR 03RS-01	3.5	0.1	3	50	8	6	0.15	2.7	●	●
	CR 03RS-01B	3.5	0.1	3	50	8	6		2.7	●	●
	CR 04RS-01	4.5	0.1	4	60	10	7		3.6	●	●
	CR 04RS-01B	4.5	0.1	4	60	10	7		3.6	●	●
	CR 05RS-01	5.5	0.1	5	70	12	8		4.5	●	●
	CR 05RS-01B	5.5	0.1	5	70	12	8		4.5	●	●

刀套详情和选择，请转到L15页。

小型镗刀

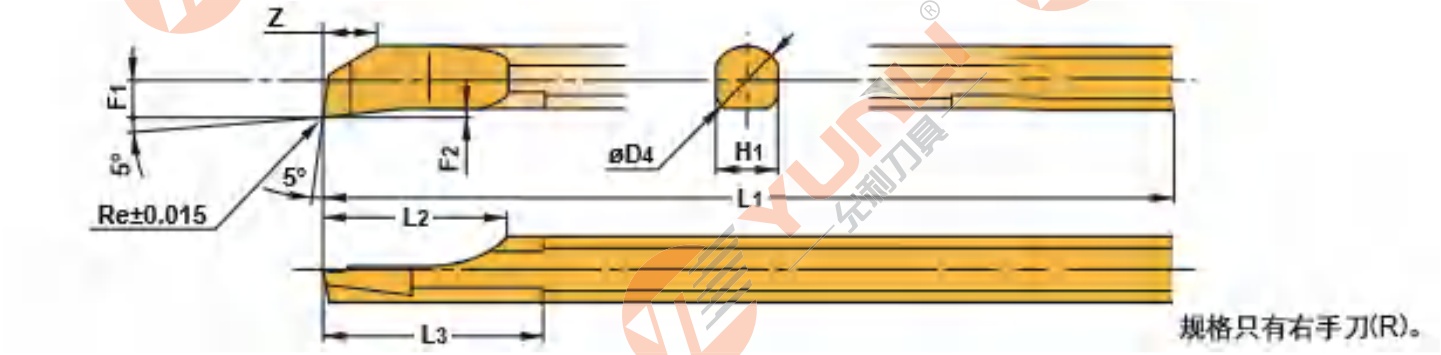

形状	型号	尺寸（mm） W3	D4	L1	L2	最小加工直径 (mm)	最大切槽深度 F2（mm）
	C03FR-BLS	2.0	3	80	15	3.2	1.0
	C04FR-BLS	2.5	4	80	20	4.2	1.5
	C05HR-BLS	3.0	5	100	25	5.2	2.0

刀套详情和选择，请转到L15页。

整体式小径加工刀具系列

MTR 单头小径镗孔刀

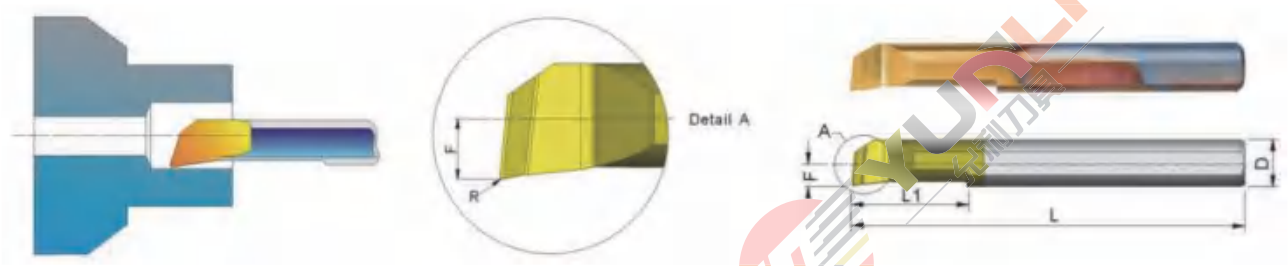

型状	D	Ordering Code	L	L1	R	F	Min.Bore Dia	Holder *
	2.0	MTR2 R0.1 L5	33	5	0.10	0.8	2.1	刀套详情和选择，请转到L15页。
		MTR2 R0.1 L10		10				
		MTR2 R0.1 L15		15				
	3.0	MTR3 R0.05 L10	36	10	0.05	1.3	3.1	
		MTR3 R0.05 L15		15				
		MTR3 R0.2 L10		10	0.20			
		MTR3 R0.2 L15		15				
	4.0	MTR4 R0.2 L10	50	10	0.20	1.7	4.1	
		MTR4 R0.2 L15		15				
		MTR4 R0.15 L25		25	0.15			
	5.0	MTR5 R0.2 L10	39	10	0.20	2.1	5.1	
		MTR5 R0.2 L15	50	15				
		MTR5 R0.2 L20		22				
	6.0	MTR6 R0.2 L15	50	15	0.20	2.8	6.1	
		MTR6 R0.2 L22		22				
	7.0	MTR7 R0.2 L15	50	15	0.20	3.3	7.1	
		MTR7 R0.2 L22		22				
		MTR7 R0.2 L30	65	30	0.10			
	8.0	MTR8 R0.2 L15	50	15	0.20	3.8	8.1	
		MTR8 R0.2 L22		22				

MQR尖嘴型镗孔刀

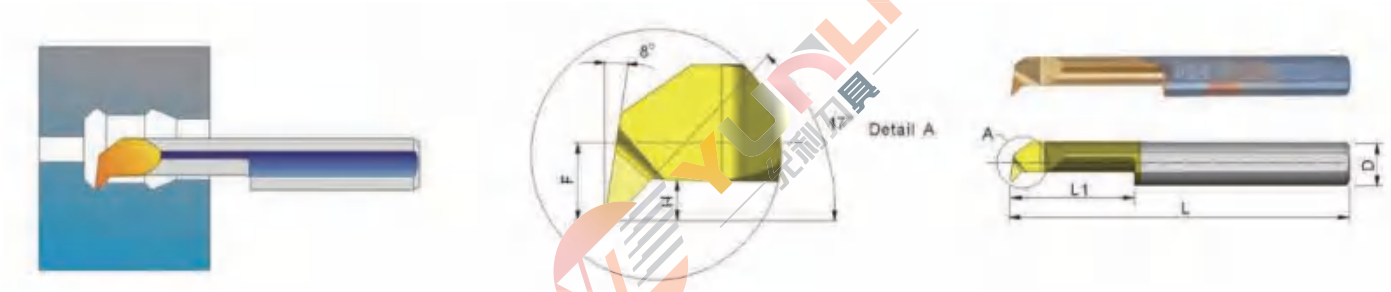

型状	D	Ordering Code	L	L1	R	H	F	Min.Bore Dia	Holder *
	4.0	MQR 4 R0.2 L10	50	10	0.20	0.8	1.80	4.1	刀套详情和选择，请转到L15页。
		MQR 4 R0.2 L15		15					
	5.0	MQR 5 R0.2 L15		15	0.20	1.0	2.30	5.1	
		MQR 5 R0.2 L22		22					
	6.0	MQR 6 R0.2 L15		15	0.20	1.4	2.80	6.0	
		MQR 6 R0.2 L22		22					
	7.0	MQR 7 R0.2 L20	50	20	0.20	2.0	3.30	7.0	
		MQR 7 R0.2 L30	60	30					

MXR小径提拉刀 倒拉刀

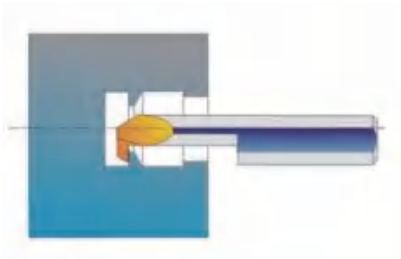

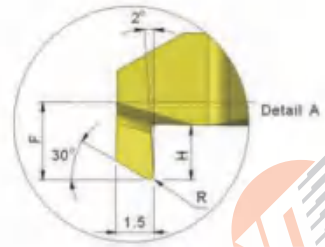

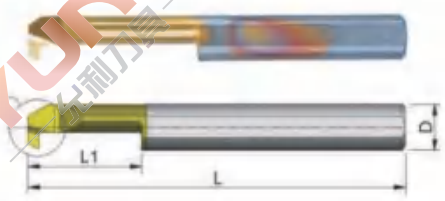

型状	D	Ordering Code	L	L1	R	H	F	Min.Bore Dia	Holder *
	4.0	MXR4 R0.1 L10	50	10	0.10	0.5	1.3	3.1	刀套详情和选择，请转到L15页。
		MXR4 R0.15 L15		15	0.15	0.8	1.6	4.1	
	5.0	MXR5 R0.2 L15		15	0.20	1.0	2.2	5.1	
		MXR5 R0.2 L22		22					
	6.0	MXR6 R0.2 L15		15	0.20	1.8	2.8	6.1	
		MXR6 R0.2 L22		22					
	7.0	MXR7 R0 2 L20		20	0.20	2.2	3.3	7.1	
		MXR7 R0 2 L30		30					

MIR 小径内螺纹

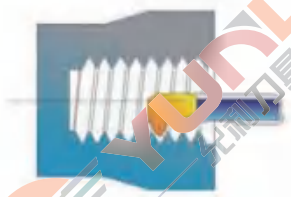

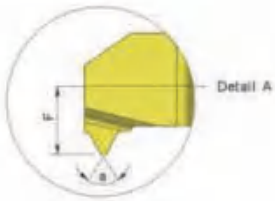

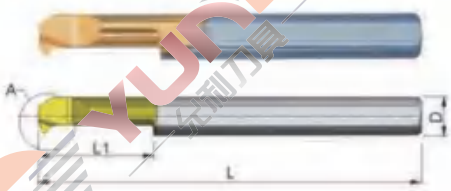

型状	D	Ordering Code	L	L1	a	F	Pitch Range mm	Pitch Range TPI	Min.Bore Dia	Holder *
	3.0	MIR3 L15A60	50	15	60	1.4	0.8-1.0	32-24	3.1	刀套详情和选择，请转到L15页。
		MIR3 L15A55			55		0.5-1.0	48-24		
	4.0	MIR4 L15A60			60	1.8	0.8-1.0	32-24	4.1	
		MIR4 L15A55			55		0.5-1.0	48-24		
	5.0	MIR5 L15A60			60	2.3	1.0-1.25	24-20	5.1	
		MIR5 L15A55			55		0.5-1.25	48-20		
	6.0	MIR6 L15A60			60	2.8	1.0-1.5	24-16	6.0	
		MIR6 L15A55			55		0.5-1.5	48-16		
	7.0	MIR6 L15A60			60	3.3	1.0-1.5	24-16	7.0	
		MIR6 L15A55			55		0.5-1.5	48-16		

MGR小径平口内槽刀

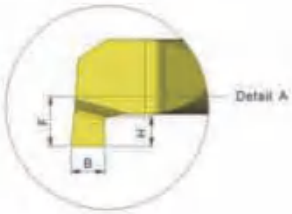

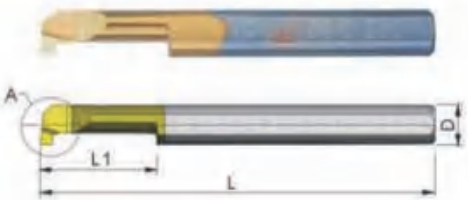

型状	D	Ordering Code	L	L1	B	H	F	Min.Bore Dia	Holder *
	4.0	MGR4 B1.0 L10	50	10	1.0	1.0	1.8	4.1	刀套详情和选择，请转到L15页。
		MGR4 B1.5 L10			1.5				
	5.0	MGR5 B1.0 L15		15	1.0	1.2	2.3	5.1	
		MGR5 B1.5 L15			1.5				
		MGR5 B2.0 L15			2.0				
	6.0	MGR6 B1.0 L15		15	1.0	1.4	2.8	6.1	
		MXR6 B1.5 L15			1.5				
		MGR6 B2.0 L15			2.0				
	7.0	MGR7 B1.0 L20		20	1.0	1.7	3.3	7.1	
		MXR7 B1.5 L20			1.5				
		MGR7 B2.0 L20			2.0				

MKR内R圆弧内槽刀

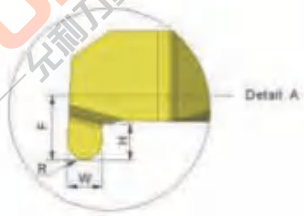

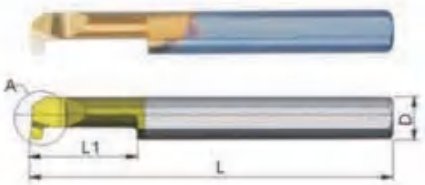

型状	D	Ordering Code	L	L1	R	W	H	F	Min.Bore Dia	Holder *
	4.0	MKR 4 R0.5 L10	50	10	0.50	1.0	1.0	1.7	4.1	刀套详情和选择，请转到L15页。
		MKR 4 R0.75 L10			0.75	1.5				
	5.0	MKR 5 R0.5 L15		15	0.50	1.0	1.2	2.3	5.1	
		MKR 5 R0.75 L15			0.75	1.5				
		MKR 5 R1.0 L15			1.00	2.0				
	6.0	MKR 6 R0.5 L15		15	0.50	1.0	1.6	2.8	6.1	
		MKR 6 R0.75 L15			0.75	1.5				
		MKR 6 R1.0 L15			1.00	2.0				
	7.0	MKR 7 R0.5 L20		20	0.50	1.0	1.8	3.3	7.1	
		MKR 7 R0.75 L20			0.75	1.5				
		MKR 7 R1.0 L20			1.00	2.0				

MFR 内端面槽刀

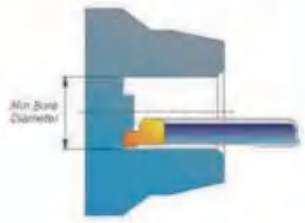

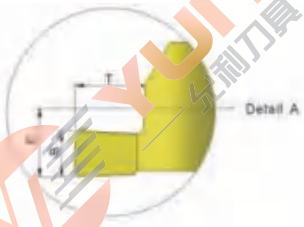

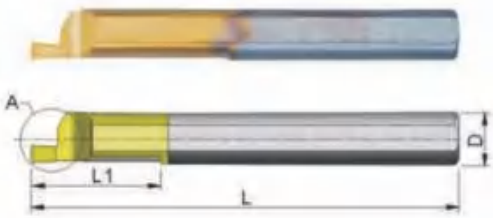

型状	D	Ordering Code	L	L1	R	T	F	Min.Bore Dia	Holder *
	4.0	MFR 4 B0.75 L15	50	15	0.75	1.2	1.95	5.0	刀套详情和选择，请转到L15页。
		MFR 4 B1.0 L15			1.00	1.5			
	5.0	MFR 5 B1.0 L22		22	1.00	1.2	2.45	6.0	
		MFR 5 B1.5 L22			1.50	1.5			
		MFR 5 B2.0 L22			2.00	2.5			
	6.0	MFR 6 B1.0 L22		22	1.00	1.5	2.95	8.0	
		MFR 6 B1.5 L22			1.50	2.5			
		MFR 6 B2.0 L22			2.00	3.0			
	7.0	MFR 7 B1.0 L30	60	30	1.00	1.5	3.25	8.0	
		MFR 7 B1.5 L30			1.50	2.5			
		MFR 7 B2.0 L30			2.00	3.0			

MFL内端面反槽刀

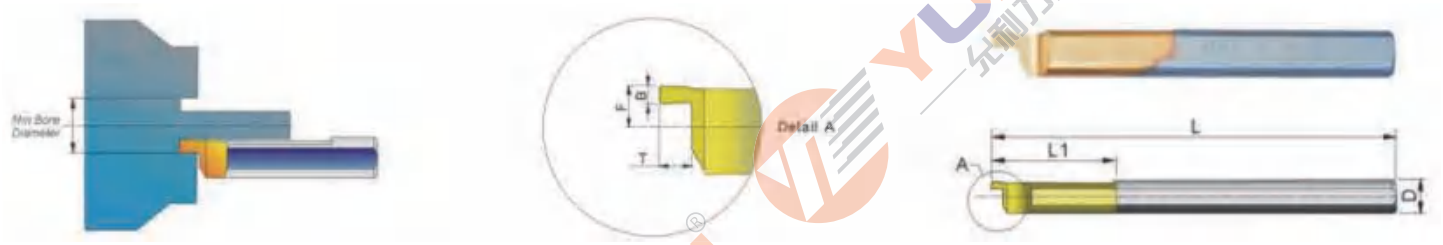

型状	D	Ordering Code	L	L1	B	T	F	Min.Bore Dia	Holder *
	4.0	MFL 4 B0.75 L15	50	15	0.75	1.2	1.75	5.0	刀套详情和选择，请转到L15页。
		MFL 4 B1.0 L15			1.00	1.5			
	5.0	MFL 5 B0 75L15		22	0.75	1.2	2.25	6.0	
		MFL 5 B1.5 L22			1.50	1.5			
		MFL 5 B2 0 L22			2.00	2.5			
	6.0	MFL 6 B1.0 L22		22	1.00	1.5	2.75	8.0	
		MFL 6 B1 5 L22			1.50	2.5			
		MFL 6 B2.0 L22			2.00	3.0			
	7.0	MFL 7 B1.0 L30	60	30	1.00	1.5	2.95	8.0	
		MFL 7 B1.5 L30			1.50	2.5			
		MFL 7 B2.0 L30			2.00	3.0			

MZR小径圆弧端面槽刀

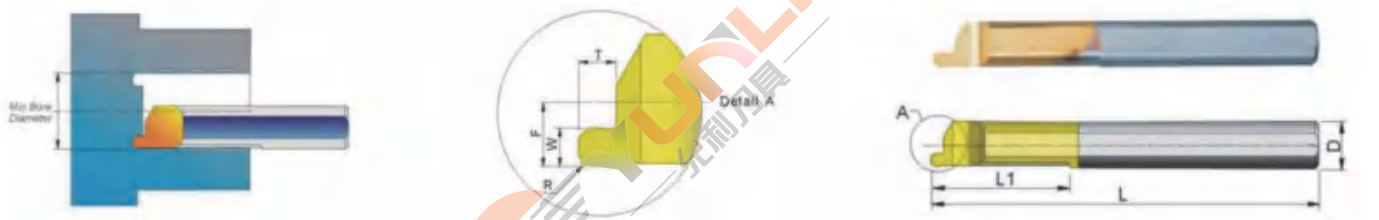

型状	D	Ordering Code	L	L1	R	W	T	F	Min.Bore Dia	Holder *
	4.0	MZR 4 R0.5 L15	50	15	0.50	1.0	1.2	1.95	5.0	刀套详情和选择，请转到L15页。
		MZR 4 R0.75 L15			0.75	1.5	1.5			
	5.0	MZR 5 R0.5 L22		22	0.50	1.0	1.2	2.45	6.0	
		MZR 5 R0.75 L22			0.75	1.5	1.5			
		MZR 5 R1 0 L22			1.00	2.0	2.5			
	6.0	MZR 6 R0.5 L22		22	0.50	1.0	1.5	2.95	8.0	
		MZR 6 R0.75 L22			0.75	1.5	2.5			
		MZR 6 R1.0 L22			1.00	2.0	3.0			
	7.0	MZR 7 R0.5 L30	60	30	0.50	1.0	1.5	3.25	8.0	
		MZR 7 R0.75 L30			0.75	1.5	2.5			
		MZR 7 R1.0 L30			1.00	2.0	3.0			

整体式刀套SHB

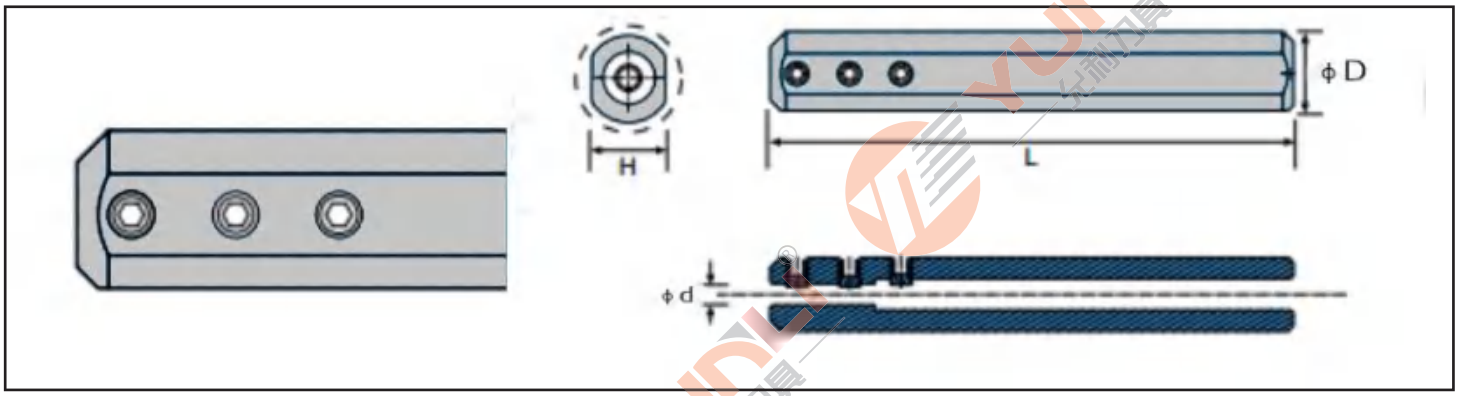

型号		尺寸				配件	
		ϕD	ϕd	L	H	无头螺丝	L扳手
	SHB02-12	12	2	100	11	M4	L020
	SHB03-12	12	3	100	11	M4	L020
	SHB04-12	12	4	100	11	M4	L020
	SHB05-12	12	5	100	11	M4	L020
	SHB06-12	12	6	100	11	M4	L020
	SHB07-12	12	7	100	11	M4	L020
	SHB08-12	12	8	100	11	M4	L020
	SHB02-16	16	2	100	15	M4	L020
	SHB03-16	16	3	100	15	M4	L020
	SHB04-16	16	4	100	15	M4	L020
	SHB05-16	16	5	100	15	M4	L020
	SHB06-16	16	6	100	15	M4	L020
	SHB07-16	16	7	100	15	M4	L020
	SHB08-16	16	8	100	15	M4	L020
	SHB10-16	16	10	100	15	M4	L020
	SHB02-20	20	2	100	18	M4	L020
	SHB03-20	20	3	100	18	M4	L020
	SHB04-20	20	4	100	18	M4	L020
	SHB05-20	20	5	100	18	M4	L020
	SHB06-20	20	6	100	18	M4	L020
	SHB07-20	20	7	100	18	M4	L020
	SHB08-20	20	8	100	18	M4	L020
	SHB10-20	20	10	100	18	M4	L020

MPR整体式仿形镗刀

型状	D	Ordering Code	L	L1	R	F	Min. Bore Dia
	3.0	MPR3R0.1L10-36L	36	10	0.1	1.3	3.1
	3.0	MPR3R0.1L15-47L	47	15	0.1	1.3	3.1
	3.0	MPR3R0.1L22-47L	47	22	0.1	1.3	3.1
	4.0	MPR4R0.2L10-36L	36	10	0.2	1.7	4.1
	4.0	MPR4R0.2L15-47L	47	15	0.2	1.7	4.1
	4.0	MPR4R0.2L22-47L	47	22	0.2	1.7	4.1
	5.0	MPR5R0.2L10-36L	36	10	0.2	2.1	5.1
	5.0	MPR5R0.2L15-47L	47	15	0.2	2.1	5.1
	5.0	MPR5R0.2L22-47L	47	22	0.2	2.1	5.1
	5.0	MPR5R0.2L30-66L	66	30	0.2	2.1	5.1
	6.0	MPR6R0.2L15-47L	47	15	0.2	2.8	6.1
	6.0	MPR6R0.2L22-47L	47	22	0.2	2.8	6.1
	6.0	MPR6R0.2L30-66L	66	30	0.2	2.8	6.1

CXS整体式小径镗刀

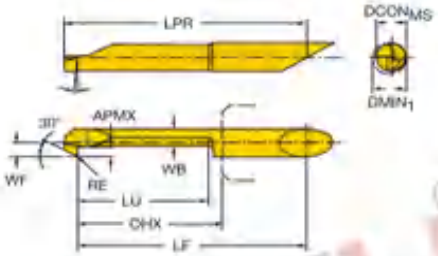

尺寸，mm

CZCMS	RE	DMIN1	LU	APMX	RMPX	OHX	型号	DCONMS	WB	LPR	LF	WF	YL10	YL740	YL930
4	0.15	4.2	23.4	0.8	27°	26.0	CXS-04B090-15-4225R	4	2.6	42.3	40.3	2.0	●	●	●
5	0.15	5.2	28.5	1.0	27°	31.0	CXS-05B090-15-5230R	5	3.8	52.3	50.3	2.5	●	●	●
6	0.15	6.2	28.5	1.8	27°	31.0	CXS-06B090-15-6230R	6	4.0	52.3	50.3	3.0	●	●	●
7	0.15	7.2	27.5	2.5	27°	30.0	CXS-07B090-15-7230R	7	4.3	52.3	49.3	3.5	●	●	●

CXS整体式小径牙刀

V牙型60°

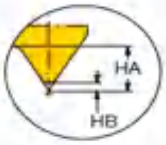

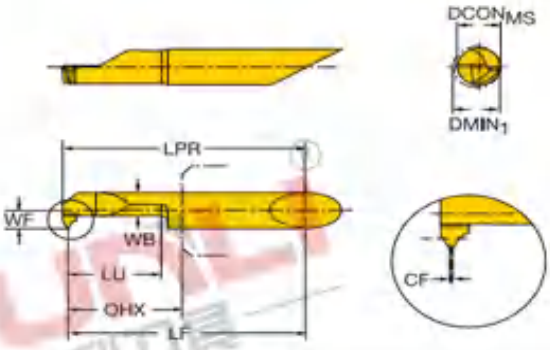

右手内螺纹

尺寸，mm

CZCMS	TPN	TPX	TPIN	TPIX	DMIN1	LU	OHX	型号	DCONMS	WB	CF	LPR	LF	WF	HA	HB	YL10	YL740	YL930
4	0.50	0.70	36.0	48.0	4.2	15.0	17.6	CXS-04TH050VM-4215R	4	3.0	0.1	32.7	32.3	2.0	0.5	0.1	●	●	●
5	0.50	0.75	36.0	48.0	5.2	15.0	17.6	CXS-05TH050VM-5215R	5	3.8	0.1	37.7	37.3	2.5	0.5	0.1	●	●	●
5	0.75	1.00	24.0	36.0	5.1	15.0	17.6	CXS-05TH070VM-5115R	5	3.7	0.1	37.8	37.3	2.4	0.7	0.1	●	●	●
5	1.00	1.25	20.0	24.0	4.8	15.0	17.5	CXS-05TH100VM-4815R	5	3.6	0.1	37.9	37.3	2.3	0.8	0.1	●	●	●
6	1.00	1.25	20.0	24.0	6.2	15.0	17.5	CXS-06TH100VM-6215R	6	3.6	0.1	37.9	37.3	3.0	0.8	0.1	●	●	●
6	1.25	1.50	18.0	20.0	6.2	15.0	17.2	CXS-06TH125VM-6215R	6	3.6	0.2	38.1	37.3	3.0	1.0	0.1	●	●	●
6	1.50	1.75	16.0	18.0	6.2	15.0	17.2	CXS-06TH150VM-6215R	6	3.6	0.2	38.3	37.3	3.0	1.1	0.2	●	●	●

CXS整体式小径镗刀

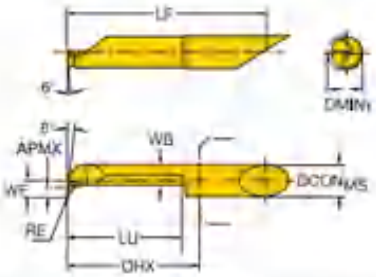

CZC	RE	DMIN1	LU	APMX	RMPX	OHX	OHN	型号	DCON	WB	LF	WF	YL10	YL740	YL930
4	0.00	0.3	1.2	0.1	17°	13.0		CXS-04T098-00-0301R	4	0.2	27.3	0.1	●	●	●
4	0.00	0.4	1.6	0.1	17°	13.0		CXS-04T098-00-0401L	4	0.3	27.3	0.2	●	●	●
4	0.00	0.4	1.6	0.1	17°	13.0		CXS-04T098-00-0401R	4	0.3	27.3	0.2	●	●	●
4	0.00	0.5	2.0	0.1	17°	13.0		CXS-04T098-00-0502L	4	0.4	27.3	0.2	●	●	●
4	0.00	0.5	2.0	0.1	17°	13.0		CXS-04T098-00-0502R	4	0.4	27.3	0.2	●	●	●
4	0.00	0.6	2.5	0.1	17°	13.0		CXS-04T098-00-0602R	4	0.5	27.3	0.3	●	●	●
4	0.00	0.7	3.5	0.1	17°	13.0		CXS-04T098-00-0703R	4	0.6	27.3	0.3	●	●	●
4	0.00	0.8	4.0	0.1	17°	13.0		CXS-04T098-00-0804R	4	0.6	27.3	0.4	●	●	●
4	0.00	0.9	5.0	0.1	17°	13.0		CXS-04T098-00-0905R	4	0.7	27.3	0.4	●	●	●
4	0.03	2.7	10.0	0.2	17°	13.0		CXS-04T098-03-2710R	4	2.1	27.3	1.2	●	●	●
4	0.03	3.2	10.0	0.2	17°	13.0		CXS-04T098-03-3210R	4	2.6	27.3	1.5	●	●	●
4	0.03	4.2	10.0	0.3	17°	13.0		CXS-04T098-03-4210R	4	3.5	27.3	2.0	●	●	●
4	0.05	1.0	4.0	0.1	17°	12.0		CXS-04T098-05-1004R	4	0.7	26.3	0.5	●	●	●
4	0.05	1.0	6.0	0.1	17°	12.0		CXS-04T098-05-1006R	4	0.7	26.3	0.5	●	●	●
4	0.05	1.7	6.0	0.2	17°	12.0		CXS-04T098-05-1706L	4	1.1	26.3	0.7	●	●	●
4	0.05	1.7	6.0	0.2	17°	12.0		CXS-04T098-05-1706R	4	1.1	26.3	0.7	●	●	●
4	0.05	1.7	9.0	0.2	17°	12.0		CXS-04T098-05-1709R	4	1.1	26.3	0.7	●	●	●
4	0.05	2.2	6.0	0.2	17°	12.0		CXS-04T098-05-2206R	4	1.6	26.3	1.0	●	●	●
4	0.05	2.2	9.0	0.2	17°	12.0		CXS-04T098-05-2209L	4	1.6	26.3	1.0	●	●	●
4	0.05	2.2	9.0	0.2	17°	12.0		CXS-04T098-05-2209R	4	1.6	26.3	1.0	●	●	●
4	0.05	2.7	10.0	0.2	17°	13.0		CXS-04T098-05-2710L	4	2.1	27.3	1.2	●	●	●
4	0.05	2.7	10.0	0.2	17°	13.0		CXS-04T098-05-2710R	4	2.1	27.3	1.2	●	●	●
4	0.05	2.7	15.0	0.2	17°	18.0		CXS-04T098-05-2715L	4	2.1	32.3	1.2	●	●	●
4	0.05	2.7	15.0	0.2	17°	18.0		CXS-04T098-05-2715R	4	2.1	32.3	1.2	●	●	●
4	0.05	3.2	15.0	0.2	17°	18.0		CXS-04T098-05-3215L	4	2.6	32.3	1.5	●	●	●
4	0.05	3.2	15.0	0.2	17°	18.0		CXS-04T098-05-3215R	4	2.6	32.3	1.5	●	●	●
4	0.05	3.2	20.0	0.2	17°	23.0		CXS-04T098-05-3220L	4	2.6	37.3	1.5	●	●	●
4	0.05	3.2	20.0	0.2	17°	23.0		CXS-04T098-05-3220R	4	2.6	37.3	1.5	●	●	●
4	0.05	4.2	15.0	0.3	17°	18.0		CXS-04T098-05-4215L	4	3.5	32.3	2.0	●	●	●
4	0.05	4.2	15.0	0.3	17°	18.0		CXS-04T098-05-4215R	4	3.5	32.3	2.0	●	●	●
4	0.05	4.2	20.0	0.3	17°	23.0		CXS-04T098-05-4220R	4	3.5	37.3	2.0	●	●	●
4	0.05	4.2	25.0	0.3	17°	28.0		CXS-04T098-05-4225L	4	3.5	42.3	2.0	●	●	●
4	0.05	4.2	25.0	0.3	17°	28.0		CXS-04T098-05-4225R	4	3.5	42.3	2.0	●	●	●
4	0.08	4.2	30.0	0.5	2°	38.0	38.0	CXS-04T098A08-4230R	4	3.6	52.3	2.0	●	●	●
4	0.10	1.0	4.0	0.1	17°	13.0		CXS-04T098-10-1004L	4	0.7	27.3	0.5	●	●	●
4	0.10	1.0	4.0	0.1	17°	13.0		CXS-04T098-10-1004R	4	0.7	27.3	0.5	●	●	●
4	0.10	1.0	6.0	0.1	17°	13.0		CXS-04T098-10-1006R	4	0.7	27.3	0.5	●	●	●

CXS整体式小径镗刀

CZC_{h5}	RE	$DMIN_1$	LU	APMX	RMPX	OHX	OHN	型号	尺寸，mm $DCON_{h5}$	WB	LF	WF	YL10	YL740	YL930
4	0.10	1.7	6.0	0.2	17°	13.0		CXS-04T098-10-1706L	4	1.1	27.3	0.7	●	●	●
4	0.10	1.7	6.0	0.2	17°	13.0		CXS-04T098-10-1706R	4	1.1	27.3	0.7	●	●	●
4	0.10	1.7	9.0	0.2	17°	13.0		CXS-04T098-10-1709L	4	1.1	27.3	0.7	●	●	●
4	0.10	1.7	9.0	0.2	17°	13.0		CXS-04T098-10-1709R	4	1.1	27.3	0.7	●	●	●
4	0.10	2.2	6.0	0.2	17°	13.0		CXS-04T098-10-2206L	4	1.6	27.3	1.0	●	●	●
4	0.10	2.2	6.0	0.2	17°	13.0		CXS-04T098-10-2206R	4	1.6	27.3	1.0	●	●	●
4	0.10	2.2	9.0	0.2	17°	13.0		CXS-04T098-10-2209L	4	1.6	27.3	1.0	●	●	●
4	0.10	2.2	9.0	0.2	17°	13.0		CXS-04T098-10-2209R	4	1.6	27.3	1.0	●	●	●
4	0.10	2.2	13.0	0.2	17°	18.0		CXS-04T098-10-2213L	4	1.6	32.3	1.0	●	●	●
4	0.10	2.2	13.0	0.2	17°	18.0		CXS-04T098-10-2213R	4	1.6	32.3	1.0	●	●	●
4	0.15	3.2	12.0	0.2	17°	15.0		CXS-04T090-15-3212L	4	2.6	29.3	1.5	●	●	●
4	0.15	3.2	12.0	0.2	17°	15.0		CXS-04T090-15-3212R	4	2.6	29.3	1.5	●	●	●
4	0.15	4.2	15.0	0.3	17°	18.0		CXS-04T090-15-4215L	4	3.5	32.3	2.0	●	●	●
4	0.15	4.2	15.0	0.3	17°	18.0		CXS-04T090-15-4215R	4	3.5	32.3	2.0	●	●	●
4	0.15	2.7	10.0	0.2	17°	13.0		CXS-04T098-15-2710L	4	2.1	27.3	1.2	●	●	●
4	0.15	2.7	10.0	0.2	17°	13.0		CXS-04T098-15-2710R	4	2.1	27.3	1.2	●	●	●
4	0.15	2.7	15.0	0.2	17°	18.0		CXS-04T098-15-2715L	4	2.1	32.3	1.2	●	●	●
4	0.15	2.7	15.0	0.2	17°	18.0		CXS-04T098-15-2715R	4	2.1	32.3	1.2	●	●	●
4	0.15	3.2	10.0	0.2	17°	13.0		CXS-04T098-15-3210L	4	2.6	27.3	1.5	●	●	●
4	0.15	3.2	10.0	0.2	17°	13.0		CXS-04T098-15-3210R	4	2.6	27.3	1.5	●	●	●
4	0.15	3.2	15.0	0.2	17°	18.0		CXS-04T098-15-3215L	4	2.6	32.3	1.5	●	●	●
4	0.15	3.2	15.0	0.2	17°	18.0		CXS-04T098-15-3215R	4	2.6	32.3	1.5	●	●	●
4	0.15	3.2	20.0	0.2	17°	23.0		CXS-04T098-15-3220L	4	2.6	37.3	1.5	●	●	●
4	0.15	3.2	20.0	0.2	17°	23.0		CXS-04T098-15-3220R	4	2.6	37.3	1.5	●	●	●
4	0.15	3.7	15.0	0.2	17°	18.0		CXS-04T098-15-3715R	4	3.1	32.3	1.7	●	●	●
4	0.15	4.2	10.0	0.3	17°	13.0		CXS-04T098-15-4210L	4	3.5	27.3	2.0	●	●	●
4	0.15	4.2	10.0	0.3	17°	13.0		CXS-04T098-15-4210R	4	3.5	27.3	2.0	●	●	●
4	0.15	4.2	15.0	0.3	17°	18.0		CXS-04T098-15-4215L	4	3.5	32.3	2.0	●	●	●
4	0.15	4.2	15.0	0.3	17°	18.0		CXS-04T098-15-4215R	4	3.5	32.3	2.0	●	●	●
4	0.15	4.2	20.0	0.3	17°	23.0		CXS-04T098-15-4220L	4	3.5	37.3	2.0	●	●	●
4	0.15	4.2	20.0	0.3	17°	23.0		CXS-04T098-15-4220R	4	3.5	37.3	2.0	●	●	●
4	0.15	4.2	25.0	0.3	17°	28.0		CXS-04T098-15-4225L	4	3.5	42.3	2.0	●	●	●
4	0.15	4.2	25.0	0.3	17°	28.0		CXS-04T098-15-4225R	4	3.5	42.3	2.0	●	●	●
4	0.15	4.2	10.2	0.5	0°	13.0		CXS-04T098A15-4210R	4	3.8	27.3	2.0	●	●	●
4	0.15	4.2	20.3	0.5	0°	23.0		CXS-04T098A15-4220L	4	3.8	37.3	2.0	●	●	●
4	0.15	4.2	20.3	0.5	0°	23.0		CXS-04T098A15-4220R	4	3.8	37.3	2.0	●	●	●
4	0.15	4.2	25.3	0.5	0°	28.0		CXS-04T098A15-4225R	4	3.8	42.3	2.0	●	●	●
4	0.15	4.2	15.3	0.3	0°	18.0		CXS-04T098A20-4215L	4	3.1	32.3	2.0	●	●	●
4	0.15	4.2	15.3	0.3	0°	18.0		CXS-04T098A20-4215R	4	3.1	32.3	2.0	●	●	●
4	0.15	4.2	20.0	0.8	44°	23.0		CXS-04TE98-15-4220L	4	3.0	37.3	2.0	●	●	●
4	0.15	4.2	20.0	0.8	44°	23.0		CXS-04TE98-15-4220R	4	3.0	37.3	2.0	●	●	●
5	0.05	5.2	20.0	0.5	17°	23.0		CXS-05T098-05-5220L	5	4.3	42.3	2.5	●	●	●
5	0.05	5.2	20.0	0.5	17°	23.0		CXS-05T098-05-5220R	5	4.3	42.3	2.5	●	●	●

CXS整体式小径镗刀

CZC_{h5}	RE	$DMIN_1$	LU	APMX	RMPX	OHX	OHN	型号	尺寸，mm $DCON_{h5}$	WB	LF	WF	YL10	YL740	YL930
5	0.05	5.2	30.0	0.5	17°	33.0		CXS-05T098-05-5230L	5	4.3	52.3	2.5	●	●	●
5	0.05	5.2	30.0	0.5	17°	33.0		CXS-05T098-05-5230R	5	4.3	52.3	2.5	●	●	●
5	0.08	5.2	40.0	0.5	2°	48.0	48.0	CXS-05T098A08-5240R	5	4.6	67.3	2.5	●	●	●
5	0.15	5.2	25.0	1.0	44°	28.0		CXS-05TE98-15-5225L	5	3.8	47.3	2.5	●	●	●
5	0.15	5.2	25.0	1.0	44°	28.0		CXS-05TE98-15-5225R	5	3.8	47.3	2.5	●	●	●
5	0.20	5.2	10.0	0.5	17°	13.0		CXS-05T090-20-5210L	5	4.2	32.3	2.5	●	●	●
5	0.20	5.2	10.0	0.5	17°	13.0		CXS-05T090-20-5210R	5	4.2	32.3	2.5	●	●	●
5	0.20	5.2	15.0	0.5	17°	18.0		CXS-05T090-20-5215L	5	4.2	37.3	2.5	●	●	●
5	0.20	5.2	15.0	0.5	17°	18.0		CXS-05T090-20-5215R	5	4.2	37.3	2.5	●	●	●
5	0.20	5.2	20.0	0.5	17°	23.0		CXS-05T090-20-5220L	5	4.2	42.3	2.5	●	●	●
5	0.20	5.2	20.0	0.5	17°	23.0		CXS-05T090-20-5220R	5	4.2	42.3	2.5	●	●	●
5	0.20	5.2	10.0	0.5	17°	13.0		CXS-05T098-20-5210L	5	4.3	32.3	2.5	●	●	●
5	0.20	5.2	10.0	0.5	17°	13.0		CXS-05T098-20-5210R	5	4.3	32.3	2.5	●	●	●
5	0.20	5.2	20.0	0.5	17°	23.0		CXS-05T098-20-5220L	5	4.3	42.3	2.5	●	●	●
5	0.20	5.2	20.0	0.5	17°	23.0		CXS-05T098-20-5220R	5	4.3	42.3	2.5	●	●	●
5	0.20	5.2	25.0	0.5	17°	28.0		CXS-05T098-20-5225L	5	4.3	47.3	2.5	●	●	●
5	0.20	5.2	25.0	0.5	17°	28.0		CXS-05T098-20-5225R	5	4.3	47.3	2.5	●	●	●
5	0.20	5.2	30.0	0.5	17°	33.0		CXS-05T098-20-5230L	5	4.3	52.3	2.5	●	●	●
5	0.20	5.2	30.0	0.5	17°	33.0		CXS-05T098-20-5230R	5	4.3	52.3	2.5	●	●	●
5	0.20	5.2	35.0	0.5	17°	38.0		CXS-05T098-20-5235R	5	4.3	57.3	2.5	●	●	●
5	0.20	5.2	40.0	0.5	17°	43.0		CXS-05T098-20-5240L	5	4.3	62.3	2.5	●	●	●
5	0.20	5.2	40.0	0.5	17°	43.0		CXS-05T098-20-5240R	5	4.3	62.3	2.5	●	●	●
5	0.20	5.2	10.2	0.6	0°	13.0		CXS-05T098A20-5210R	5	4.8	32.3	2.5	●	●	●
5	0.20	5.2	15.0	0.5	0°	18.0		CXS-05T098A20-5215L	5	4.3	37.3	2.5	●	●	●
5	0.20	5.2	15.0	0.5	0°	18.0		CXS-05T098A20-5215R	5	4.3	37.3	2.5	●	●	●
5	0.20	5.2	20.3	0.6	0°	23.0		CXS-05T098A20-5220R	5	4.8	42.3	2.5	●	●	●
5	0.20	5.2	25.4	0.5	0°	28.0		CXS-05T098A20-5225L	5	4.8	47.3	2.5	●	●	●
5	0.20	5.2	25.4	0.5	0°	28.0		CXS-05T098A20-5225R	5	4.8	47.3	2.5	●	●	●
5	0.20	5.2	30.5	0.6	0°	33.0		CXS-05T098A20-5230R	5	4.8	52.3	2.5	●	●	●
6	0.05	6.2	20.0	0.5	17°	23.0		CXS-06T098-05-6220L	6	5.3	42.3	3.0	●	●	●
6	0.05	6.2	20.0	0.5	17°	23.0		CXS-06T098-05-6220R	6	5.3	42.3	3.0	●	●	●
6	0.08	6.2	45.0	0.5	2°	53.0	53.0	CXS-06T098A08-6245R	6	5.5	72.3	3.0	●	●	●
6	0.15	6.2	30.0	1.8	44°	33.0		CXS-06TE98-15-6230L	6	4.0	52.3	3.0	●	●	●
6	0.15	6.2	30.0	1.8	44°	33.0		CXS-06TE98-15-6230R	6	4.0	52.3	3.0	●	●	●
6	0.20	6.2	15.0	0.5	17°	18.0		CXS-06T098-20-6215L	6	5.3	37.3	3.0	●	●	●
6	0.20	6.2	15.0	0.5	17°	18.0		CXS-06T098-20-6215R	6	5.3	37.3	3.0	●	●	●
6	0.20	6.2	20.0	0.5	17°	23.0		CXS-06T098-20-6220L	6	5.3	42.3	3.0	●	●	●
6	0.20	6.2	20.0	0.5	17°	23.0		CXS-06T098-20-6220R	6	5.3	42.3	3.0	●	●	●
6	0.20	6.2	25.0	0.5	17°	28.0		CXS-06T098-20-6225L	6	5.3	47.3	3.0	●	●	●
6	0.20	6.2	25.0	0.5	17°	28.0		CXS-06T098-20-6225R	6	5.3	47.3	3.0	●	●	●

CXS整体式小径镗刀

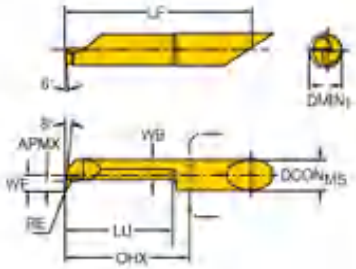

CZCMS	RE	DMIN1	LU	APMX	RMPX	OHX	OHN	型号	DCONMS	WB	LF	WF	YL10	YL740	YL930
									尺寸，mm						
6	0.20	6.2	30.0	0.5	17°	33.0		CXS-06T098-20-6230L	6	5.3	32.3	3.0	●	●	●
6	0.20	6.2	30.0	0.5	17°	33.0		CXS-06T098-20-6230R	6	5.3	32.3	3.0	●	●	●
6	0.20	6.2	35.0	0.5	17°	38.0		CXS-06T098-20-6235L	6	5.3	37.3	3.0	●	●	●
6	0.20	6.2	35.0	0.5	17°	38.0		CXS-06T098-20-6235R	6	5.3	37.3	3.0	●	●	●
6	0.20	6.2	40.0	0.5	17°	43.0		CXS-06T098-20-6240L	6	5.3	62.3	3.0	●	●	●
6	0.20	6.2	40.0	0.5	17°	43.0		CXS-06T098-20-6240R	6	5.3	62.3	3.0	●	●	●
6	0.20	6.2	15.2	0.8	0°	18.0		CXS-06T098A20-6215L	6	5.7	37.3	3.0	●	●	●
6	0.20	6.2	15.2	0.8	0°	18.0		CXS-06T098A20-6215R	6	5.7	37.3	3.0	●	●	●
6	0.20	6.2	20.3	0.8	0°	23.0		CXS-06T098A20-6220L	6	5.7	42.3	3.0	●	●	●
6	0.20	6.2	20.3	0.8	0°	23.0		CXS-06T098A20-6220R	6	5.7	42.3	3.0	●	●	●
6	0.20	6.2	25.4	0.8	0°	28.0		CXS-06T098A20-6225L	6	5.7	47.3	3.0	●	●	●
6	0.20	6.2	25.4	0.8	0°	28.0		CXS-06T098A20-6225R	6	5.7	47.3	3.0	●	●	●
6	0.20	6.2	30.5	0.5	0°	33.0		CXS-06T098A20-6230L	6	5.7	52.3	3.0	●	●	●
6	0.20	6.2	30.5	0.5	0°	33.0		CXS-06T098A20-6230R	6	5.7	52.3	3.0	●	●	●
6	0.20	6.2	40.0	0.5	0°	43.0		CXS-06T098A20-6240R	6	5.3	62.3	3.0	●	●	●
7	0.08	7.2	55.0	0.5	2°	63.0		CXS-07T098A08-7255R	7	6.5	82.3	3.5	●	●	●
7	0.20	7.2	25.0	0.5	17°	28.0		CXS-07T098-20-7225L	7	6.3	47.3	3.5	●	●	●
7	0.20	7.2	25.0	0.5	17°	28.0		CXS-07T098-20-7225R	7	6.3	47.3	3.5	●	●	●
7	0.20	7.2	30.0	0.5	17°	33.0		CXS-07T098-20-7230L	7	6.3	52.3	3.5	●	●	●
7	0.20	7.2	30.0	0.5	17°	33.0		CXS-07T098-20-7230R	7	6.3	52.3	3.5	●	●	●
7	0.20	7.2	40.0	0.5	17°	43.0		CXS-07T098-20-7240L	7	6.3	62.3	3.5	●	●	●
7	0.20	7.2	40.0	0.5	17°	43.0		CXS-07T098-20-7240R	7	6.3	62.3	3.5	●	●	●
7	0.20	7.2	45.0	0.5	17°	48.0		CXS-07T098-20-7245L	7	6.3	67.3	3.5	●	●	●
7	0.20	7.2	45.0	0.5	17°	48.0		CXS-07T098-20-7245R	7	6.3	67.3	3.5	●	●	●
7	0.20	7.2	50.0	0.5	17°	53.0		CXS-07T098-20-7250L	7	6.3	72.3	3.5	●	●	●
7	0.20	7.2	50.0	0.5	17°	53.0		CXS-07T098-20-7250R	7	6.3	72.3	3.5	●	●	●
7	0.20	7.2	25.4	0.9	0°	28.0		CXS-07T098A20-7225R	7	6.7	47.3	3.5	●	●	●
7	0.20	7.2	30.5	0.9	0°	33.0		CXS-07T098A20-7230R	7	6.7	52.3	3.5	●	●	●
7	0.20	7.2	40.6	0.5	0°	43.0		CXS-07T098A20-7240L	7	6.7	62.3	3.5	●	●	●
7	0.20	7.2	40.6	0.5	0°	43.0		CXS-07T098A20-7240R	7	6.7	62.3	3.5	●	●	●
7	0.20	7.2	40.0	2.5	44°	43.0		CXS-07TE98-20-7240L	7	6.3	62.3	4.2	●	●	●
7	0.20	7.2	40.0	2.5	44°	43.0		CXS-07TE98-20-7240R	7	6.3	62.3	4.2	●	●	●

CXS整体式小径镗刀

车削 / 仿形车削

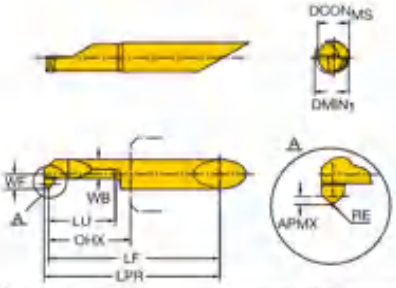

CZCMS	RE	DMIN1	LU	APMX	RMPX	OHX	型号	DCONMS	WB	LF	WF	YL10	YL740	YL930
								尺寸，mm						
5	0.20	5.2	15.0	0.7	42°	17.0	CXS-05T045-20-5215R	5	3.8	37.3	36.3	2.5	●	●	●
5	0.20	5.2	20.0	0.7	42°	22.0	CXS-05T045-20-5220L	5	3.8	42.3	41.3	2.5	●	●	●
5	0.20	5.2	20.0	0.7	42°	22.0	CXS-05T045-20-5220R	5	3.8	42.3	41.3	2.5	●	●	●
6	0.20	6.2	20.0	0.7	42°	22.0	CXS-06T045-20-6220R	6	4.0	42.3	41.3	3.0	●	●	●
6	0.20	6.2	25.0	0.7	42°	27.0	CXS-06T045-20-6225L	6	4.0	47.3	46.3	3.0	●	●	●
6	0.20	6.2	25.0	0.7	42°	27.0	CXS-06T045-20-6225R	6	4.0	47.3	46.3	3.0	●	●	●
7	0.20	7.2	20.0	0.7	42°	22.0	CXS-07T045-20-7220L	7	4.3	42.3	41.3	3.5	●	●	●
7	0.20	7.2	20.0	0.7	42°	22.0	CXS-07T045-20-7220R	7	4.3	42.3	41.3	3.5	●	●	●
7	0.20	7.2	40.0	0.7	42°	42.0	CXS-07T045-20-7240L	7	4.3	62.3	61.3	3.5	●	●	●
7	0.20	7.2	40.0	0.7	42°	42.0	CXS-07T045-20-7240R	7	4.3	62.3	61.3	3.5	●	●	●

CXS整体式小径镗刀

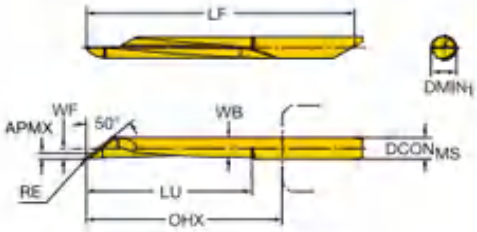

CZCMS	RE	DMIN1	LU	APMX	RMPX	OHX	型号	DCONMS	WB	LPR	LF	WF	YL10	YL740	YL930
								尺寸，mm							
4	0.05	4.2	30.0	0.1	2°	38.0	CXS-04T140A05-4230R	4	3.6	38.0	52.3	2.0	●	●	●
5	0.05	5.2	40.0	0.1	2°	48.0	CXS-05T140A05-5240R	5	4.6	48.0	67.3	2.5	●	●	●
6	0.05	6.2	45.0	0.1	2°	53.0	CXS-06T140A05-6245R	6	5.5	53.0	72.3	3.0	●	●	●
7	0.05	7.2	55.0	0.1	2°	63.0	CXS-07T140A05-7255R	7	6.5	63.0	82.3	3.5	●	●	●

CXS-G整体式小径槽刀

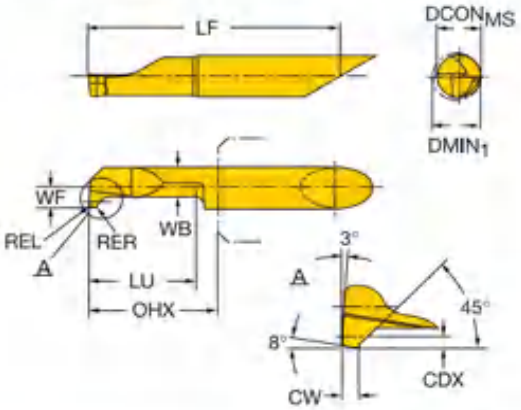

尺寸，mm

CZGMS	CW	KCHL	KCHR	CHWL	CHWR	CDX	DMIN1	LU	OHX	型号	DCONMS	WB	LF	WF	YL10	YL740	YL930
5	1.00	45°	45°	0.04	0.04	0.7	5.2	15.0	18.0	CXS-05GX100-5215R/L	5	3.8	37.3	2.5	●	●	●
5	1.00	45°	45°	0.04	0.04	0.7	5.2	20.0	23.0	CXS-05GX100-5220R	5	3.8	42.3	2.5	●	●	●
5	1.00	45°	45°	0.04	0.04	0.7	5.2	25.0	28.0	CXS-05GX100-5225R/L	5	3.8	47.3	2.5	●	●	●
5	1.00	45°	45°	0.04	0.04	0.7	5.2	30.0	33.0	CXS-05GX100-5230R	5	3.8	52.3	2.5	●	●	●

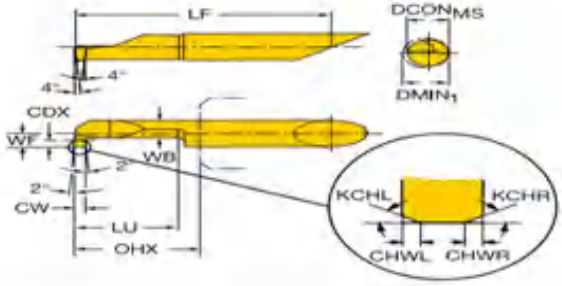

尺寸，mm

CZGMS	CW	KCHL	KCHR	CHWL	CHWR	CDX	DMIN1	LU	OHX	型号	DCONMS	WB	LF	WF	YL10	YL740	YL930
4	0.50	45°	45°	0.04	0.04	0.4	2.0	9.0	12.0	CXS-04G050-2009L	4	1.2	26.3	2.0	●	●	●
4	0.50	45°	45°	0.04	0.04	0.4	2.0	12.0	15.0	CXS-04G050-2012R/L	4	1.2	29.3	2.0	●	●	●
4	0.70	45°	45°	0.04	0.04	0.6	3.0	16.0	19.0	CXS-04G070-3016R/L	4	2.0	33.3	2.0	●	●	●
4	0.78	45°	45°	0.04	0.04	0.8	4.2	10.0	13.0	CXS-04G078-4210R	4	3.0	27.3	2.0	●	●	●
4	0.78	45°	45°	0.04	0.04	0.8	4.2	15.0	18.0	CXS-04G078-4215R/L	4	3.0	32.3	2.0	●	●	●
4	0.78	45°	45°	0.04	0.04	0.8	4.2	20.0	23.0	CXS-04G078-4220R	4	3.0	37.3	2.0	●	●	●
4	0.78	45°	45°	0.04	0.04	0.8	4.2	25.0	28.0	CXS-04G078-4225R/L	4	3.0	42.3	2.0	●	●	●
4	1.00	45°	45°	0.04	0.04	0.8	4.2	10.0	13.0	CXS-04G100-4210R/L	4	3.0	27.3	2.0	●	●	●
4	1.00	45°	45°	0.04	0.04	0.8	4.2	15.0	18.0	CXS-04G100-4215R/L	4	3.0	32.3	2.0	●	●	●
4	1.00	45°	45°	0.04	0.04	0.8	4.2	20.0	23.0	CXS-04G100-4220R/L	4	3.0	37.3	2.0	●	●	●
5	0.78	45°	45°	0.04	0.04	1.0	5.2	10.0	13.0	CXS-05G078-5210R	5	3.8	32.3	2.5	●	●	●
5	0.78	45°	45°	0.04	0.04	1.0	5.2	15.0	18.0	CXS-05G078-5215R	5	3.8	37.3	2.5	●	●	●
5	0.78	45°	45°	0.04	0.04	1.0	5.2	20.0	23.0	CXS-05G078-5220R/L	5	3.8	42.3	2.5	●	●	●
5	0.78	45°	45°	0.04	0.04	1.0	5.2	25.0	28.0	CXS-05G078-5225L	5	3.8	47.3	2.5	●	●	●
5	0.78	45°	45°	0.04	0.04	1.0	5.2	30.0	33.0	CXS-05G078-5230R	5	3.8	52.3	2.5	●	●	●

YUNLI 允利刀具

CXS-G整体式小径槽刀

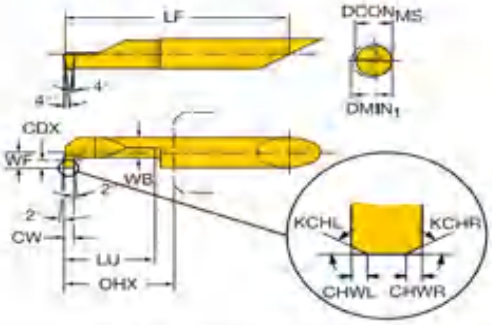

CZCdg	CW	KCHL	KCHR	CHWL	CHWR	CDX	DMIN1	LU	OHX	型号	DCONMS	WB	LF	WF	YL10	YL740	YL930
											尺寸：mm						
5	1.00	45°	45°	0.04	0.04	1.0	5.2	35.0	38.0	CXS-05G100-5235R/L	5	3.8	57.3	2.5	●	●	●
5	1.17	45°	45°	0.04	0.04	1.0	5.2	10.0	13.0	CXS-05G117-5210R	5	3.8	32.3	2.5	●	●	●
5	1.17	45°	45°	0.04	0.04	1.0	5.2	15.0	18.0	CXS-05G117-5215L	5	3.8	37.3	2.5	●	●	●
5	1.17	45°	45°	0.04	0.04	1.0	5.2	20.0	23.0	CXS-05G117-5220R	5	3.8	42.3	2.5	●	●	●
5	1.17	45°	45°	0.04	0.04	1.0	5.2	30.0	33.0	CXS-05G117-5230L	5	3.8	52.3	2.5	●	●	●
5	1.17	45°	45°	0.04	0.04	1.0	5.2	35.0	38.0	CXS-05G117-5235R	5	3.8	57.3	2.5	●	●	●
5	1.50	45°	45°	0.04	0.04	1.0	5.2	10.0	13.0	CXS-05G150-5210R	5	3.8	32.3	2.5	●	●	●
5	1.50	45°	45°	0.04	0.04	1.0	5.2	15.0	18.0	CXS-05G150-5215R/L	5	3.8	37.3	2.5	●	●	●
5	1.50	45°	45°	0.04	0.04	1.0	5.2	20.0	23.0	CXS-05G150-5220R	5	3.8	42.3	2.5	●	●	●
5	1.50	45°	45°	0.04	0.04	1.0	5.2	25.0	28.0	CXS-05G150-5225L	5	3.8	47.3	2.5	●	●	●
5	1.50	45°	45°	0.04	0.04	1.0	5.2	30.0	33.0	CXS-05G150-5230R	5	3.8	52.3	2.5	●	●	●
5	1.00	45°	45°	0.04	0.04	1.0	5.2	35.0	38.0	CXS-05G150-5235R	5	3.8	57.3	2.5	●	●	●
5	1.57	45°	45°	0.04	0.04	1.0	5.2	15.0	18.0	CXS-05G157-5215R	5	3.8	37.3	2.5	●	●	●
5	1.57	45°	45°	0.04	0.04	1.0	5.2	20.0	23.0	CXS-05G157-5220R/L	5	3.8	42.3	2.5	●	●	●
5	1.57	45°	45°	0.04	0.04	1.0	5.2	25.0	28.0	CXS-05G157-5225L	5	3.8	47.3	2.5	●	●	●
5	1.57	45°	45°	0.04	0.04	1.0	5.2	30.0	33.0	CXS-05G157-5230R	5	3.8	52.3	2.5	●	●	●
5	1.57	45°	45°	0.04	0.04	1.0	5.2	10.0	13.0	CXS-05G198-5210L	5	3.8	32.3	2.5	●	●	●
5	1.98	45°	45°	0.04	0.04	1.0	5.2	15.0	18.0	CXS-05G198-5215R/L	5	3.8	37.3	2.5	●	●	●
5	1.98	45°	45°	0.04	0.04	1.0	5.2	25.0	28.0	CXS-05G198-5225R/L	5	3.8	47.3	2.5	●	●	●
5	1.98	45°	45°	0.04	0.04	1.0	5.2	30.0	33.0	CXS-05G198-5230R	5	3.8	52.3	2.5	●	●	●
5	2.00	45°	45°	0.04	0.04	1.0	5.2	10.0	13.0	CXS-05G200-5210R	5	3.8	32.3	2.5	●	●	●
5	2.00	45°	45°	0.04	0.04	1.0	5.2	20.0	23.0	CXS-05G200-5220R/L	5	3.8	42.3	2.5	●	●	●
5	2.00	45°	45°	0.04	0.04	1.0	5.2	30.0	33.0	CXS-05G200-5230R	5	3.8	52.3	2.5	●	●	●
6	0.78	45°	45°	0.04	0.04	1.8	6.2	10.0	13.0	CXS-06G078-6210R	6	4.0	32.3	3.0	●	●	●
6	0.78	45°	45°	0.04	0.04	1.8	6.2	15.0	18.0	CXS-06G078-6215R/L	6	4.0	37.3	3.0	●	●	●
6	0.78	45°	45°	0.04	0.04	1.8	6.2	25.0	28.0	CXS-06G078-6225R	6	4.0	47.3	3.0	●	●	●
6	0.78	45°	45°	0.04	0.04	1.8	6.2	30.0	33.0	CXS-06G078-6230L	6	4.0	52.3	3.0	●	●	●
6	0.78	45°	45°	0.04	0.04	1.8	6.2	35.0	38.0	CXS-06G078-6235R/L	6	4.0	57.3	3.0	●	●	●
6	1.00	45°	45°	0.04	0.04	1.8	6.2	10.0	13.0	CXS-06G100-6210R	6	4.0	32.3	3.0	●	●	●
6	1.00	45°	45°	0.04	0.04	1.8	6.2	15.0	18.0	CXS-06G100-6215L	6	4.0	37.3	3.0	●	●	●
6	1.00	45°	45°	0.04	0.04	1.8	6.2	15.0	18.0	CXS-06G100-6215R	6	4.0	37.3	3.0	●	●	●
6	1.00	45°	45°	0.04	0.04	1.8	6.2	25.0	28.0	CXS-06G100-6225R/L	6	4.0	47.3	3.0	●	●	●
6	1.00	45°	45°	0.04	0.04	1.8	6.2	35.0	38.0	CXS-06G100-6235R	6	4.0	57.3	3.0	●	●	●
6	1.00	45°	45°	0.04	0.04	1.8	6.2	40.0	43.0	CXS-06G100-6240R	6	4.0	62.3	3.0	●	●	●
6	1.17	45°	45°	0.04	0.04	1.8	6.2	10.0	13.0	CXS-06G117-6210R	6	4.0	32.3	3.0	●	●	●
6	1.17	45°	45°	0.04	0.04	1.8	6.2	15.0	18.0	CXS-06G117-6215R	6	4.0	37.3	3.0	●	●	●
6	1.17	45°	45°	0.04	0.04	1.8	6.2	20.0	23.0	CXS-06G117-6220R	6	4.0	42.3	3.0	●	●	●
6	1.17	45°	45°	0.04	0.04	1.8	6.2	25.0	28.0	CXS-06G117-6225R/L	6	4.0	47.3	3.0	●	●	●
6	1.17	45°	45°	0.04	0.04	1.8	6.2	30.0	33.0	CXS-06G117-6230R	6	4.0	52.3	3.0	●	●	●
6	1.17	45°	45°	0.04	0.04	1.8	6.2	40.0	43.0	CXS-06G117-6240R/L	6	4.0	62.3	3.0	●	●	●

YUNLI 允利刀具

CXS-G整体式小径槽刀

尺寸：mm

CZG	CT	XCH	XCW	CHW	CHWF	CDX	DMIN	LU	OAL	型号	DCON	RE	LF	AF	YL 10	YL 740	YL 930
6	1.50	45°	45°	0.04	0.04	1.8	6.2	10.0	13.0	CXS-06G150-6210R	6	4.0	32.3	3.0	●	●	●
6	1.50	45°	45°	0.04	0.04	1.8	6.2	15.0	18.0	CXS-06G150-6215L	6	4.0	37.3	3.0	●	●	●
6	1.50	45°	45°	0.04	0.04	1.8	6.2	15.0	18.0	CXS-06G150-6215R	6	4.0	37.3	3.0	●	●	●
6	1.50	45°	45°	0.04	0.04	1.8	6.2	25.0	28.0	CXS-06G150-6225R/L	6	4.0	47.3	3.0	●	●	●
6	1.50	45°	45°	0.04	0.04	1.8	6.2	30.0	33.0	CXS-06G150-6230R	6	4.0	52.3	3.0	●	●	●
6	1.50	45°	45°	0.04	0.04	1.8	6.2	35.0	38.0	CXS-06G150-6235R/L	6	4.0	57.3	3.0	●	●	●
6	1.57	45°	45°	0.04	0.04	1.8	6.2	10.0	13.0	CXS-06G157-6210R	6	4.0	32.3	3.0	●	●	●
6	1.57	45°	45°	0.04	0.04	1.8	6.2	15.0	18.0	CXS-06G157-6215R/L	6	4.0	37.3	3.0	●	●	●
6	1.57	45°	45°	0.04	0.04	1.8	6.2	25.0	28.0	CXS-06G157-6225R	6	4.0	47.3	3.0	●	●	●
6	1.57	45°	45°	0.04	0.04	1.8	6.2	30.0	33.0	CXS-06G157-6230L	6	4.0	52.3	3.0	●	●	●
6	1.57	45°	45°	0.04	0.04	1.8	6.2	35.0	38.0	CXS-06G157-6235R/L	6	4.0	57.3	3.0	●	●	●
6	1.98	45°	45°	0.04	0.04	1.8	6.2	10.0	13.0	CXS-06G198-6210R	6	4.0	32.3	3.0	●	●	●
6	1.98	45°	45°	0.04	0.04	1.8	6.2	15.0	18.0	CXS-06G198-6215R	6	4.0	37.3	3.0	●	●	●
6	1.98	45°	45°	0.04	0.04	1.8	6.2	25.0	28.0	CXS-06G198-6225R	6	4.0	47.3	3.0	●	●	●
6	1.98	45°	45°	0.04	0.04	1.8	6.2	35.0	38.0	CXS-06G198-6235R/L	6	4.0	57.3	3.0	●	●	●
6	2.00	45°	45°	0.04	0.04	1.8	6.2	10.0	13.0	CXS-06G200-6210R	6	4.0	32.3	3.0	●	●	●
6	2.00	45°	45°	0.04	0.04	1.8	6.2	15.0	18.0	CXS-06G200-6215R/L	6	4.0	37.3	3.0	●	●	●
6	2.00	45°	45°	0.04	0.04	1.8	6.2	25.0	28.0	CXS-06G200-6225R/L	6	4.0	47.3	3.0	●	●	●
6	2.00	45°	45°	0.04	0.04	1.8	6.2	30.0	33.0	CXS-06G200-6230R/L	6	4.0	52.3	3.0	●	●	●
7	0.79	45°	45°	0.04	0.04	2.5	7.2	10.0	13.0	CXS-07G078-7210R	7	4.3	32.3	3.5	●	●	●
7	0.79	45°	45°	0.04	0.04	2.5	7.2	15.0	18.0	CXS-07G078-7215R/L	7	4.3	37.3	3.5	●	●	●
7	0.79	45°	45°	0.04	0.04	2.5	7.2	25.0	28.0	CXS-07G078-7225R	7	4.3	47.3	3.5	●	●	●
7	0.79	45°	45°	0.04	0.04	2.5	7.2	30.0	33.0	CXS-07G078-7230R/L	7	4.3	52.3	3.5	●	●	●
7	0.79	45°	45°	0.04	0.04	2.5	7.2	35.0	38.0	CXS-07G078-7235R/L	7	4.3	57.3	3.5	●	●	●
7	0.79	45°	45°	0.04	0.04	2.5	7.2	40.0	43.0	CXS-07G078-7240R	7	4.3	62.3	3.5	●	●	●
7	1.00	45°	45°	0.04	0.04	2.5	7.2	10.0	13.0	CXS-07G100-7210R	7	4.3	32.3	3.5	●	●	●
7	1.00	45°	45°	0.04	0.04	2.5	7.2	15.0	18.0	CXS-07G100-7215R/L	7	4.3	37.3	3.5	●	●	●
7	1.00	45°	45°	0.04	0.04	2.5	7.2	25.0	28.0	CXS-07G100-7225R/L	7	4.3	47.3	3.5	●	●	●
7	1.00	45°	45°	0.04	0.04	2.5	7.2	30.0	33.0	CXS-07G100-7230R/L	7	4.3	52.3	3.5	●	●	●
7	1.00	45°	45°	0.04	0.04	2.5	7.2	35.0	38.0	CXS-07G100-7235R	7	4.3	57.3	3.5	●	●	●
7	1.00	45°	45°	0.04	0.04	2.5	7.2	40.0	43.0	CXS-07G100-7240R	7	4.3	62.3	3.5	●	●	●
7	1.17	45°	45°	0.04	0.04	2.5	7.2	10.0	13.0	CXS-07G117-7210R	7	4.3	32.3	3.5	●	●	●
7	1.17	45°	45°	0.04	0.04	2.5	7.2	15.0	18.0	CXS-07G117-7215R	7	4.3	37.3	3.5	●	●	●
7	1.17	45°	45°	0.04	0.04	2.5	7.2	25.0	28.0	CXS-07G117-7225R	7	4.3	47.3	3.5	●	●	●
7	1.17	45°	45°	0.04	0.04	2.5	7.2	30.0	33.0	CXS-07G117-7230R	7	4.3	52.3	3.5	●	●	●
7	1.17	45°	45°	0.04	0.04	2.5	7.2	35.0	38.0	CXS-07G117-7235R	7	4.3	57.3	3.5	●	●	●
7	1.17	45°	45°	0.04	0.04	2.5	7.2	40.0	43.0	CXS-07G117-7240R/L	7	4.3	62.3	3.5	●	●	●
7	1.50	45°	45°	0.04	0.04	2.5	7.2	10.0	13.0	CXS-07G150-7210R	7	4.3	32.3	3.5	●	●	●
7	1.50	45°	45°	0.04	0.04	2.5	7.2	15.0	18.0	CXS-07G150-7215R/L	7	4.3	37.3	3.5	●	●	●
7	1.50	45°	45°	0.04	0.04	2.5	7.2	25.0	28.0	CXS-07G150-7225R/L	7	4.3	47.3	3.5	●	●	●
7	1.50	45°	45°	0.04	0.04	2.5	7.2	35.0	38.0	CXS-07G150-7235R	7	4.3	57.3	3.5	●	●	●
7	1.50	45°	45°	0.04	0.04	2.5	7.2	40.0	43.0	CXS-07G150-7240R/L	7	4.3	62.3	3.5	●	●	●
7	1.57	45°	45°	0.04	0.04	2.5	7.2	10.0	13.0	CXS-07G157-7210R	7	4.3	32.3	3.5	●	●	●
7	1.57	45°	45°	0.04	0.04	2.5	7.2	15.0	18.0	CXS-07G157-7215R/L	7	4.3	37.3	3.5	●	●	●
7	1.57	45°	45°	0.04	0.04	2.5	7.2	20.0	23.0	CXS-07G157-7220L	7	4.3	42.3	3.5	●	●	●
7	1.57	45°	45°	0.04	0.04	2.5	7.2	25.0	28.0	CXS-07G157-7225R	7	4.3	47.3	3.5	●	●	●
7	1.57	45°	45°	0.04	0.04	2.5	7.2	35.0	38.0	CXS-07G157-7235R/L	7	4.3	57.3	3.5	●	●	●
7	1.57	45°	45°	0.04	0.04	2.5	7.2	40.0	43.0	CXS-07G157-7240L	7	4.3	62.3	3.5	●	●	●
7	1.98	45°	45°	0.04	0.04	2.5	7.2	10.0	13.0	CXS-07G198-7210R	7	4.3	32.3	3.5	●	●	●
7	1.98	45°	45°	0.04	0.04	2.5	7.2	15.0	18.0	CXS-07G198-7215R/L	7	4.3	37.3	3.5	●	●	●
7	1.98	45°	45°	0.04	0.04	2.5	7.2	30.0	33.0	CXS-07G198-7230L	7	4.3	52.3	3.5	●	●	●
7	1.98	45°	45°	0.04	0.04	2.5	7.2	35.0	38.0	CXS-07G198-7235R/L	7	4.3	57.3	3.5	●	●	●
7	2.00	45°	45°	0.04	0.04	2.5	7.2	10.0	13.0	CXS-07G200-7210R	7	4.3	32.3	3.5	●	●	●
7	2.00	45°	45°	0.04	0.04	2.5	7.2	15.0	18.0	CXS-07G200-7215R/L	7	4.3	37.3	3.5	●	●	●
7	2.00	45°	45°	0.04	0.04	2.5	7.2	20.0	23.0	CXS-07G200-7220R	7	4.3	42.3	3.5	●	●	●
7	2.00	45°	45°	0.04	0.04	2.5	7.2	25.0	28.0	CXS-07G200-7225R/L	7	4.3	47.3	3.5	●	●	●
7	2.00	45°	45°	0.04	0.04	2.5	7.2	35.0	38.0	CXS-07G200-7235R/L	7	4.3	57.3	3.5	●	●	●

CXS-F整体式小径端面槽刀

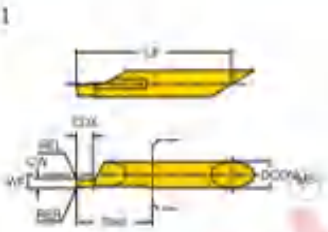

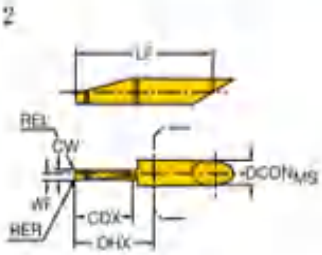

A曲线

CZC$_{ES}$	CW	REL	REB	CDX	DAXN	OHX	DSGN	型号	DCON$_{ES}$	LF	WF	CWTOLL	CWTOLU	RETOLL	RETOLU	YL10	YL740	YL930
6	1.00	0.15	0.15	2.0	4.2	18.0	1	CXS-06F100-6215AR/L	6	37.3	3.0	0.000	0.050	-0.02	0.02	●	●	●
6	1.50	0.15	0.15	3.0	3.2	18.0	1	CXS-06F150-6215AR/L	6	37.3	3.0	0.000	0.050	-0.02	0.02	●	●	●
6	2.00	0.15	0.15	4.0	2.2	18.0	1	CXS-06F200-6215AR/L	6	37.3	3.0	0.000	0.050	-0.02	0.02	●	●	●
6	2.50	0.15	0.15	5.0	1.2	18.0	1	CXS-06F250-6215AR/L	6	37.3	3.0	0.000	0.050	-0.02	0.02	●	●	●
6	3.00	0.15	0.15	6.0	0.2	18.0	1	CXS-06F300-6215AR/L	6	37.3	3.0	0.000	0.050	-0.02	0.02	●	●	●
8	2.00	0.20	0.20	15.0	11.0	20.0	2	CXS-08F200-8015AR/L	8	44.3	1.6	0.000	0.050	-0.02	0.02	●	●	●
8	2.50	0.20	0.20	10.0	5.0	15.0	2	CXS-08F250-8010AR/L	8	39.3	1.6	0.000	0.050	-0.02	0.02	●	●	●
8	3.00	0.20	0.20	10.0	4.0	15.0	2	CXS-08F300-8010AR/L	8	39.3	2.1	0.000	0.050	-0.02	0.02	●	●	●
8	3.00	0.20	0.20	15.0	9.0	20.0	2	CXS-08F300-8015AR/L	8	44.3	2.1	0.000	0.050	-0.02	0.02	●	●	●
8	4.00	0.20	0.20	10.0	2.0	15.0	2	CXS-08F400-8010AR/L	8	39.3	2.5	0.000	0.050	-0.02	0.02	●	●	●
8	4.00	0.20	0.20	15.0	7.0	20.0	2	CXS-08F400-8015AR/L	8	44.3	2.5	0.000	0.050	-0.02	0.02	●	●	●
10	3.00	0.20	0.20	20.0	14.0	28.0	2	CXS-10F300-10020AR/L	10	52.3	2.1	0.000	0.050	-0.02	0.02	●	●	●
10	3.00	0.20	0.20	25.0	19.0	33.0	2	CXS-10F300-10025AR/L	10	57.3	2.1	0.000	0.050	-0.02	0.02	●	●	●
10	3.00	0.20	0.20	30.0	24.0	38.0	2	CXS-10F300-10030AR/L	10	62.3	2.1	0.000	0.050	-0.02	0.02	●	●	●
10	4.00	0.20	0.20	20.0	12.0	28.0	2	CXS-10F400-10020AR/L	10	52.3	2.7	0.000	0.050	-0.02	0.02	●	●	●
10	4.00	0.20	0.20	25.0	17.0	33.0	2	CXS-10F400-10025AR/L	10	57.3	2.7	0.000	0.050	-0.02	0.02	●	●	●
10	4.00	0.20	0.20	30.0	22.0	38.0	2	CXS-10F400-10030AR/L	10	62.3	2.7	0.000	0.050	-0.02	0.02	●	●	●
10	5.00	0.20	0.20	20.0	10.0	28.0	2	CXS-10F500-10020AR/L	10	52.3	3.1	0.000	0.050	-0.02	0.02	●	●	●
10	5.00	0.20	0.20	25.0	15.0	33.0	2	CXS-10F500-10025AR/L	10	57.3	3.1	0.000	0.050	-0.02	0.02	●	●	●
10	5.00	0.20	0.20	30.0	20.0	38.0	2	CXS-10F500-10030AR/L	10	62.3	3.1	0.000	0.050	-0.02	0.02	●	●	●

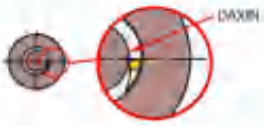

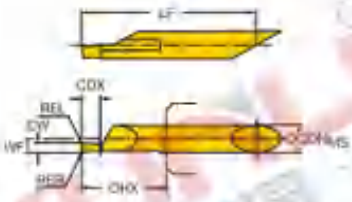

B曲线

CZC$_{ES}$	CW	REL	REB	CDX	DAXN	OHX	型号	DCON$_{ES}$	LF	WF	CWTOLL	CWTOLU	RETOLL	RETOLU	YL10	YL740	YL930
6	1.00	0.15	0.15	2.0	4.2	18.0	CXS-06F100-6215BR/L	6	37.3	3.0	0.000	0.050	-0.02	0.02	●	●	●
6	1.50	0.15	0.15	3.0	3.2	18.0	CXS-06F150-6215BR/L	6	37.3	3.0	0.000	0.050	-0.02	0.02	●	●	●
6	2.00	0.15	0.15	4.0	2.2	18.0	CXS-06F200-6215BR/L	6	37.3	3.0	0.000	0.050	-0.02	0.02	●	●	●
6	2.50	0.15	0.15	5.0	1.2	18.0	CXS-06F250-6215BR/L	6	37.3	3.0	0.000	0.050	-0.02	0.02	●	●	●
6	3.00	0.15	0.15	6.0	0.2	18.0	CXS-06F300-6215BR/L	6	37.3	3.0	0.000	0.050	-0.02	0.02	●	●	●

CXS-R 整体式小径端面圆弧槽刀

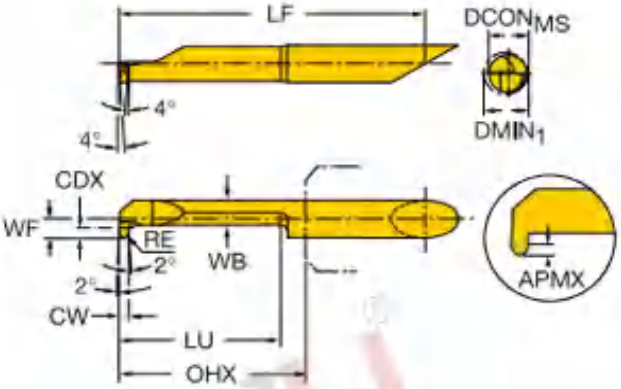

CZC$_{g6}$	CW	RE	CDX	DMIN$_1$	LU	OHX	型号	DCON$_{g6}$	WB	LF	WF	YL10	YL740	YL930
							尺寸，mm							
4	1.17	0.58	0.8	4.2	15.0	18.0	CXS-04R058-4215R	4	3.0	32.3	2.0	●	●	●
4	1.00	0.50	0.8	4.2	15.0	18.0	CXS-04R100-4215R/L	4	3.0	32.3	2.0	●	●	●
5	1.17	0.58	1.0	5.2	20.0	23.0	CXS-05R058-5220R/L	5	3.8	42.3	2.5	●	●	●
5	1.63	0.81	1.0	5.2	20.0	23.0	CXS-05R081-5220R	5	3.8	42.3	2.5	●	●	●
5	1.98	0.99	1.0	5.2	20.0	23.0	CXS-05R099-5220R	5	3.8	42.3	2.5	●	●	●
5	1.00	0.50	1.0	5.2	20.0	23.0	CXS-05R100-5220R	5	3.8	42.3	2.5	●	●	●
5	1.50	0.75	1.0	5.2	20.0	23.0	CXS-05R150-5220R	5	3.8	42.3	2.5	●	●	●
5	2.00	1.00	1.0	5.2	20.0	23.0	CXS-05R200-5220R	5	3.8	42.3	2.5	●	●	●
6	1.17	0.58	1.8	6.2	25.0	28.0	CXS-06R058-6225R/L	6	4.0	47.3	3.0	●	●	●
6	1.63	0.81	1.8	6.2	25.0	28.0	CXS-06R081-6225R	6	4.0	47.3	3.0	●	●	●
6	1.98	0.99	1.8	6.2	25.0	28.0	CXS-06R099-6225R	6	4.0	47.3	3.0	●	●	●
6	1.00	0.50	1.8	6.2	25.0	28.0	CXS-06R100-6225R/L	6	4.0	47.3	3.0	●	●	●
6	1.50	0.75	1.8	6.2	25.0	28.0	CXS-06R150-6225R	6	4.0	47.3	3.0	●	●	●
6	2.00	1.00	1.8	6.2	25.0	28.0	CXS-06R200-6225R/L	6	4.0	47.3	3.0	●	●	●
7	1.17	0.58	2.5	7.2	30.0	33.0	CXS-07R058-7230R	7	4.3	52.3	3.5	●	●	●
7	1.63	0.81	2.5	7.2	30.0	33.0	CXS-07R081-7230R	7	4.3	52.3	3.5	●	●	●
7	1.98	0.99	2.5	7.2	30.0	33.0	CXS-07R099-7230R	7	4.3	52.3	3.5	●	●	●
7	1.00	0.50	2.5	7.2	30.0	33.0	CXS-07R100-7230R/L	7	4.3	52.3	3.5	●	●	●
7	1.50	0.75	2.5	7.2	30.0	33.0	CXS-07R150-7230R	7	4.3	52.3	3.5	●	●	●
7	2.00	1.00	2.5	7.2	30.0	33.0	CXS-07R200-7230R/L	7	4.3	52.3	3.5	●	●	●

带两个平面的削平直柄

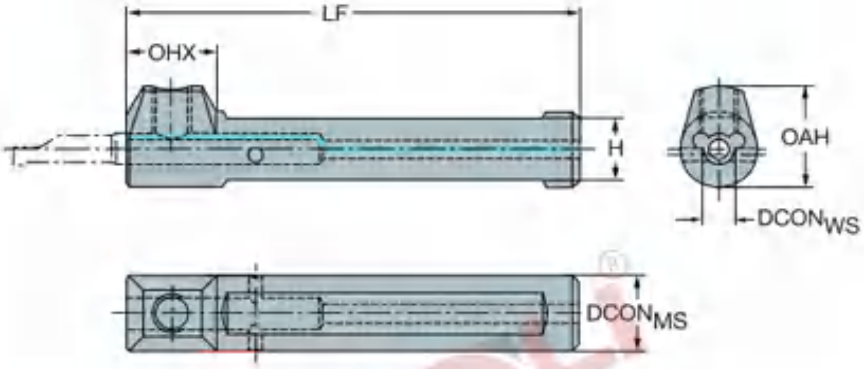

钢制刀杆

CZCMS	CZCWS	OHX	CXSC	CXSC	DSGN	型号	DCONWS	DCONMS	H	LF	OAH	BAR	NM	KG
							尺寸，mm							
10	4	14.0	1	1	1	CXS-A10-04	10.0	4.0	8.0	65.0	14.5	10	7.0	0.0
	5	14.0	1	1	1	CXS-A10-05	10.0	5.0	8.0	65.0	15.0	10	7.0	0.0
12	4	14.0	1	1	1	CXS-A12-04	12.0	4.0	10.0	70.0	15.5	10	7.0	0.0
	5	14.0	1	1	1	CXS-A12-05	12.0	5.0	10.0	70.0	16.0	10	7.0	0.0
	6	14.0	1	1	1	CXS-A12-06	12.0	6.0	10.0	70.0	16.5	10	7.0	0.0
16	4	14.0	1	1	1	CXS-A16-04	16.0	4.0	14.0	75.0	17.5	10	7.0	0.1
	5	14.0	1	1	1	CXS-A16-05	16.0	5.0	14.0	75.0	18.0	10	7.0	0.1
	6	14.0	1	1	1	CXS-A16-06	16.0	6.0	14.0	75.0	18.5	10	7.0	0.1
	7	14.0	1	1	1	CXS-A16-07	16.0	7.0	14.0	75.0	19.0	10	7.0	0.1
	8	14.0	1	1	1	CXS-A16-08	16.0	8.0	14.0	75.0	19.5	10	7.0	0.0
20	4	14.0	1	1	1	CXS-A20-04	20.0	4.0	18.0	90.0	20.0	10	7.0	0.2
	5	14.0	1	1	1	CXS-A20-05	20.0	5.0	18.0	90.0	20.0	10	7.0	0.2
	6	14.0	1	1	1	CXS-A20-06	20.0	6.0	18.0	90.0	22.0	10	7.0	0.2
	7	14.0	1	1	1	CXS-A20-07	20.0	7.0	18.0	90.0	22.0	10	7.0	0.2
	8	14.0	1	1	1	CXS-A20-08	20.0	8.0	18.0	90.0	25.0	10	7.0	0.0
	10	14.0	1	1	1	CXS-A20-10	20.0	10.0	18.0	90.0	25.0	10	7.0	0.2
25	8	14.0	1	1	1	CXS-A25-08	25.0	8.0	23.0	110.0	25.0	10	7.0	0.4
	10	14.0	1	1	1	CXS-A25-10	25.0	10.0	23.0	110.0	25.0	10	7.0	0.4

带两个平面的削平直柄

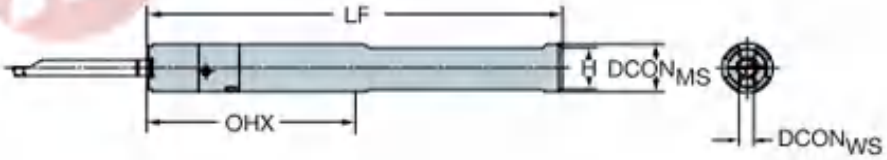

钢制刀杆

CZC$_{WS}$	CZC$_{WS}$	OHX	CNSC	CXSC	DSGN	型号	尺寸，mm DCON$_{WS}$	DCON$_{WS}$	H	HD$_1$	LB$_1$	LF	BAR	NM	KG
12 (x 10)	4	22.0	1	3	2	CXS-A12-04-X	12.0	4.0	11.0	14.5	70.0	70.0	80	20.0	0.0
	5	23.0	1	3	2	CXS-A12-05-X	12.0	5.0	11.0	14.5	70.0	70.0	80	20.0	0.0
16 (x 14)	4	22.0	1	3	2	CXS-A16-04-X	16.0	4.0	15.0	14.5	13.0	75.0	80	20.0	0.1
	5	23.0	1	3	2	CXS-A16-05-X	16.0	5.0	15.0	14.5	14.0	75.0	80	20.0	0.1
	6	26.5	1	3	2	CXS-A16-06-X	16.0	6.0	15.0	16.5	75.0	75.0	80	20.0	0.1
	7	26.5	1	3	2	CXS-A16-07-X	16.0	7.0	15.0	16.5	75.0	75.0	80	20.0	0.1
25	4	24.0	1	3	2	CXS-A25-04-X	25.0	4.0	24.0	14.5	13.0	110.0	80	20.0	0.3
	5	25.0	1	3	2	CXS-A25-05-X	25.0	5.0	24.0	14.5	14.0	110.0	80	20.0	0.3
	6	26.5	1	3	2	CXS-A25-06-X	25.0	6.0	24.0	16.5	17.5	110.0	80	20.0	0.3
	7	26.0	1	3	2	CXS-A25-07-X	25.0	7.0	24.0	16.5	17.5	110.0	80	20.0	0.3

CXS-FN 方杆刀套

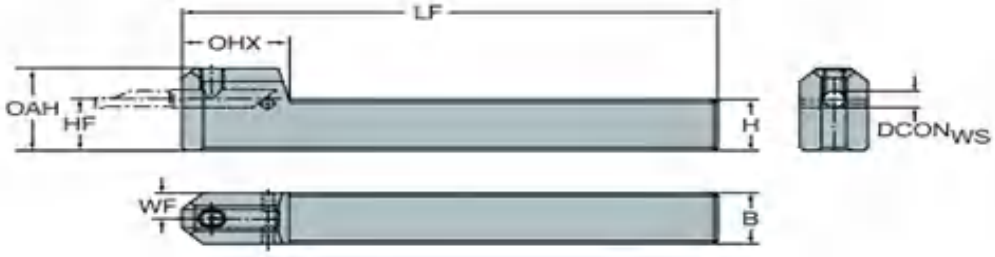

CZC$_{WS}$	CZC$_{WS}$	OHX	型号	尺寸，mm DCON$_{WS}$	B	H	LF	WF	HF	OAH	NM	KG
12 x 12	4	19.0	CXS-1212-04FN	4.0	12.0	12.0	100.0	6.0	12.0	21.0	7.0	0.1
	5	25.0	CXS-1212-05FN	5.0	12.0	12.0	100.0	6.0	12.0	21.5	7.0	0.1
	6	26.0	CXS-1212-06FN	6.0	12.0	12.0	100.0	6.0	12.0	22.0	7.0	0.1
16 x 16	4	19.0	CXS-1616-04FN	4.0	16.0	16.0	125.0	8.0	16.0	25.0	7.0	0.2
	5	25.0	CXS-1616-05FN	5.0	16.0	16.0	125.0	8.0	16.0	25.5	7.0	0.2
	6	26.0	CXS-1616-06FN	6.0	16.0	16.0	125.0	8.0	16.0	26.0	7.0	0.2
	7	26.5	CXS-1616-07FN	7.0	16.0	16.0	125.0	8.0	16.0	26.5	7.0	0.2
20 x 20	4	19.0	CXS-2020-04FN	4.0	20.0	20.0	125.0	10.0	20.0	29.0	7.0	0.4
	5	25.0	CXS-2020-05FN	5.0	20.0	20.0	125.0	10.0	20.0	29.5	7.0	0.4
	6	25.5	CXS-2020-06FN	6.0	20.0	20.0	125.0	10.0	20.0	30.0	7.0	0.4
	7	26.5	CXS-2020-07FN	7.0	20.0	20.0	125.0	10.0	20.0	30.5	7.0	0.4
	8	32.5	CXS-2020-08FN	8.0	20.0	20.0	125.0	10.0	20.0	31.0	7.0	0.4
	10	34.5	CXS-2020-10FN	10.0	20.0	20.0	125.0	10.0	20.0	32.0	7.0	0.4
25 x 25	5	25.9	CXS-2525-05FN	5.0	25.0	25.0	150.0	12.5	25.0	34.5	7.0	0.7
	6	25.5	CXS-2525-06FN	6.0	25.0	25.0	150.0	12.5	25.0	35.0	7.0	0.7
	7	26.5	CXS-2525-07FN	7.0	25.0	25.0	150.0	12.5	25.0	35.5	7.0	0.7
	8	32.5	CXS-2525-08FN	8.0	25.0	25.0	150.0	12.5	25.0	36.0	7.0	0.7
	10	34.5	CXS-2525-10FN	10.0	25.0	25.0	150.0	12.5	25.0	37.0	7.0	0.7

EZFG小内径端面槽刀

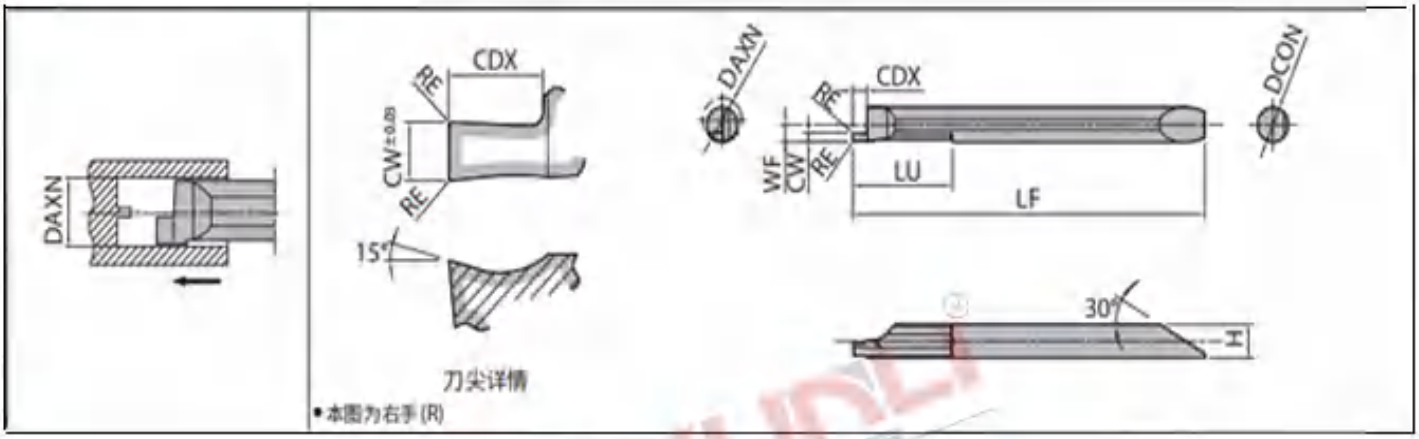

刀片尺寸

型号	最小端面槽外径	尺寸(mm)								涂层		
	DAXN	CW±0.03	RE	DCON	H	LF	LU	WF	CDX	YL10	YL740	YL930
EZFG 050040-100	5	1.0	±0.013 0.05	4	3.8	45.0	12	1.9	1.5	●	○	●
050040-150		1.5							2.0	●	○	●
EZFG 060050-100	6	1.0	±0.013 0.05	5	4.8	53.2	15	2.4	1.5	●	○	●
060050-150		1.5							2.5	●	○	●
060050-200		2.0							3.0	●	○	●
EZFG 080070-100	8	1.0	±0.013 0.05	7	6.8	64.2	25	3.4	2.0	●	○	●
080070-150		1.5							2.5	●	○	●
080070-200		2.0							3.0	●	○	●
080070-300		3.0								●	○	●

EZG小内径切槽刀片

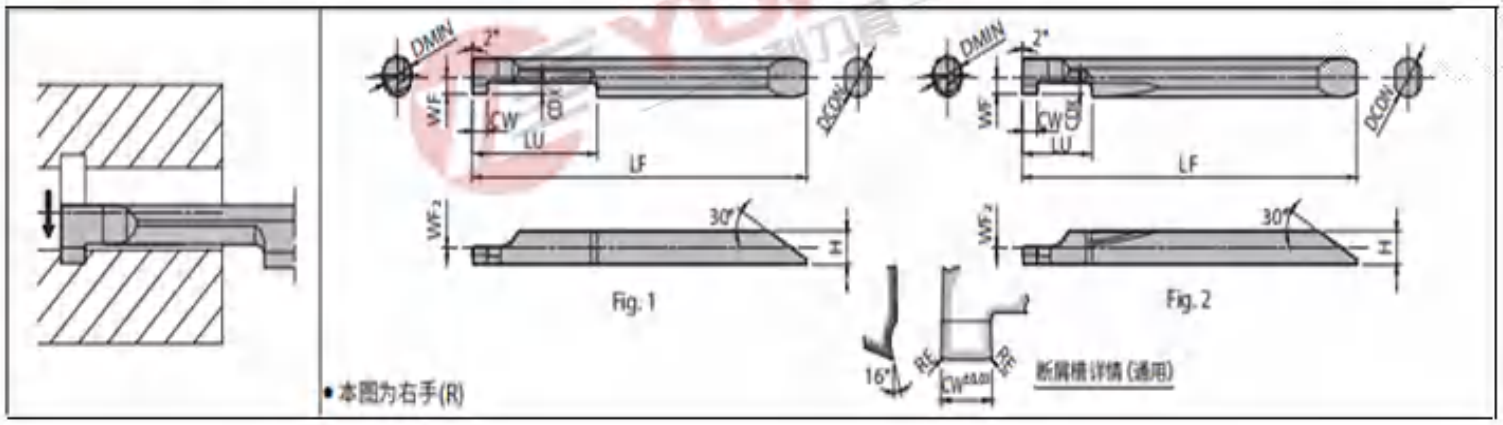

刀片尺寸

型号		最小加工径	尺寸(mm)									涂层		
		DMIN	CW±0.03	RE	DCON	H	LF	LU	WF	WF2	CDX	YL10	YL740	YL930
EZG®/L	040040-050	4	0.5	±0.013 0.05	4	3.45	44.7	12	1.7	0	1	●	○	●
	040040-100		1.0									●	○	●
	040040-150		1.5									●	○	●
	040040-200		2.0									●	○	●
	050050-100	5	1.0		5	4.3	52.8	20	2.15		1.5	●	○	●
	050050-150		1.5									●	○	●
	050050-200		2.0									●	○	●
	060060-100	6	1.0		6	5.15	60.7		2.65		2	●	○	●
	060060-150		1.5									●	○	●
	060060-200		2.0									●	○	●
	070070-100	7	1.0		7	6.2	63.7	25	3.05		2	●	○	●
	070070-150		1.5									●	○	●
	070070-200		2.0									●	○	●
	080070-100	8	1.0						3.45		2	●	○	●
	080070-150		1.5									●	○	●
	080070-200		2.0									●	○	●
EZGR	030030-050S	3	0.5	±0.013 0.05	3	2.5	38.7	5	1.25	0	0.8	●	○	●
	030030-100S		1.0									●	○	●
	040040-050S	4	0.5		4	3.45	44.7	8	1.7		1	●	○	●
	040040-100S		1.0									●	○	●
	040040-150S		1.5									●	○	●
	040040-200S		2.0									●	○	●
	050050-100S	5	1.0		5	4.3	52.8	10	2.15		1.5	●	○	●
	050050-150S		1.5									●	○	●
	050050-200S		2.0									●	○	●
	060060-100S	6	1.0		6	5.15	60.7		2.65		2	●	○	●
	060060-150S		1.5									●	○	●
	060060-200S		2.0									●	○	●
	070070-100S	7	1.0		7	6.2	63.7		3.05			●	○	●
	070070-150S		1.5									●	○	●
	070070-200S		2.0									●	○	●
	080070-100S	8	1.0						3.45			●	○	●
	080070-150S		1.5									●	○	●
	080070-200S		2.0									●	○	●

EZGR/L小径切槽刀

EZFGR/L小径端面槽刀

PICCO 050 小径镗刀

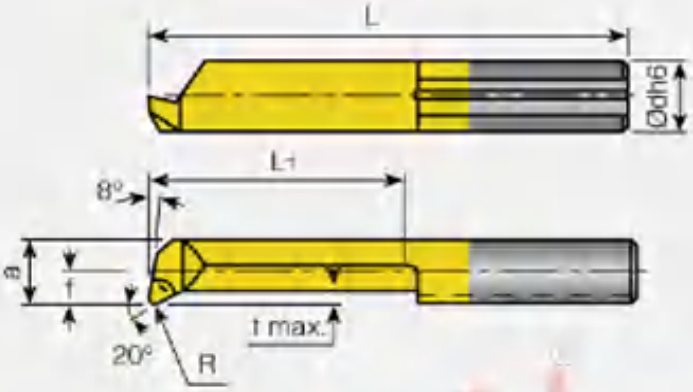

型号	ødh6	f	a	L	L1	R+0.05	t max	最小加工孔直径	YL10	YL740	YL930
PICCO R/L 050.06-2(1)	4.0	—	0.5	20	2.0	0.04	0.08	0.6	●	●	●
PICCO R/L 050.06-3(1)	4.0	—	0.5	20	3.0	0.04	0.08	0.6	●	●	●
PICCO R/L 050.1-5	4.0	—	0.9	20	4.5	0.05	0.1	1.0	●	●	●
PICCO R/L 050.1-7	4.0	—	0.9	22	6.5	0.05	0.1	1.0	●	●	●
PICCO R/L 050.2-5	4.0	—	1.7	19	4	0.05	0.1	2.0	●	●	●
PICCO R/L 050.2-10	4.0	—	1.7	24	9	0.05	0.1	2.0	●	●	●
PICCO R/L 050.2-15	4.0	—	1.7	29	14	0.05	0.1	2.0	●	●	●
PICCO R/L 050.3-10	4.0	0.6	2.6	24	9	0.10	0.2	2.8	●	●	●
PICCO R/L 050.3-16	4.0	0.6	2.6	30	15	0.10	0.2	2.8	●	●	●
PICCO R/L 050.3-20	4.0	0.6	2.6	34	19	0.10	0.2	2.8	●	●	●
PICCO R/L 050.4-10	4.0	1.5	3.5	24	9	0.10	0.3	4.0	●	●	●
PICCO R/L 050.4-16	4.0	1.5	3.5	30	15	0.10	0.3	4.0	●	●	●
PICCO R/L 050.4-20	4.0	1.5	3.5	34	19	0.10	0.3	4.0	●	●	●
PICCO R/L 050.4-24	4.0	1.5	3.5	38	23	0.10	0.3	4.0	●	●	●
PICCO R/L 050.4-28	4.0	1.5	3.5	42	27	0.10	0.3	4.0	●	●	●
PICCO R/L 050.5-10	5.0	1.9	4.4	25	9	0.15	0.5	5.0	●	●	●
PICCO R/L 050.5-15	5.0	1.9	4.4	30	14	0.15	0.5	5.0	●	●	●
PICCO R/L 050.5-20	5.0	1.9	4.4	35	19	0.15	0.5	5.0	●	●	●
PICCO R/L 050.5-25	5.0	1.9	4.4	40	24	0.15	0.5	5.0	●	●	●
PICCO R/L 050.5-30	5.0	1.9	4.4	45	29	0.15	0.5	5.0	●	●	●
PICCO R/L 050.5-35	5.0	1.9	4.4	50	34	0.15	0.5	5.0	●	●	●
PICCO R/L 050.6-15	6.0	2.3	5.3	30	14	0.15	0.5	6.0	●	●	●
PICCO R/L 050.6-22	6.0	2.3	5.3	37	21	0.15	0.5	6.0	●	●	●
PICCO R/L 050.6-25	6.0	2.3	5.3	40	24	0.15	0.5	6.0	●	●	●
PICCO R/L 050.6-30	6.0	2.3	5.3	45	29	0.15	0.5	6.0	●	●	●
PICCO R/L 050.6-35	6.0	2.3	5.3	50	34	0.15	0.5	6.0	●	●	●
PICCO R/L 050.6-42	6.0	2.3	5.3	57	41	0.15	0.5	6.0	●	●	●
PICCO R/L 050.7-20	7.0	2.8	6.3	35	19	0.15	0.6	6.8	●	●	●
PICCO R/L 050.7-25	7.0	2.8	6.3	40	24	0.15	0.6	6.8	●	●	●
PICCO R/L 050.7-30	7.0	2.8	6.3	45	29	0.15	0.6	6.8	●	●	●
PICCO R/L 050.7-35	7.0	2.8	6.3	50	34	0.15	0.6	7.0	●	●	●
PICCO R/L 050.7-40	7.0	2.8	6.3	55	39	0.15	0.6	7.0	●	●	●
PICCO R/L 050.7-45	7.0	2.8	6.3	60	44	0.15	0.6	7.0	●	●	●
PICCO R/L 050.7-50	7.0	2.8	6.3	65	49	0.15	0.6	7.0	●	●	●

PICCO-090整体式小径镗刀

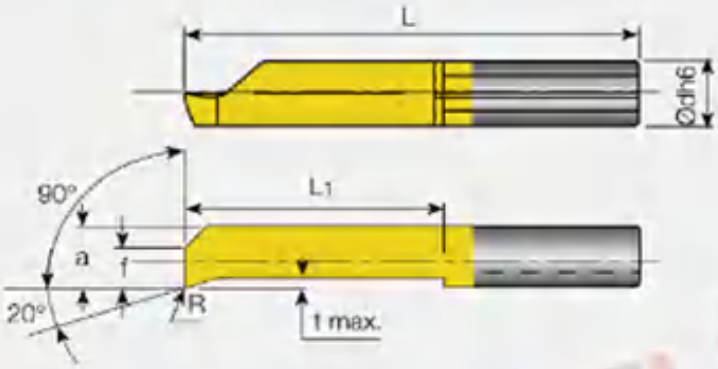

规格	ødh6	f	a	L	L_1	$R^{+0.05}$	t max	最小加工孔直径	YL10	YL740	YL930
PICCO R/L 090.3-10	4.0	0.6	2.6	24	9	0.10	0.2	2.8	●	●	●
PICCO R/L 090.3-16	4.0	0.6	2.6	30	15	0.10	0.2	2.8	●	●	●
PICCO R/L 090.4-10	4.0	1.5	3.5	24	9	0.10	0.3	4.0	●	●	●
PICCO R/L 090.4-16	4.0	1.5	3.5	30	15	0.10	0.3	4.0	●	●	●
PICCO R/L 090.5-10	5.0	1.9	4.4	25	9	0.15	0.5	5.0	●	●	●
PICCO R/L 090.5-15	5.0	1.9	4.4	30	14	0.15	0.5	5.0	●	●	●
PICCO R/L 090.5-20	5.0	1.9	4.4	35	19	0.15	0.5	5.0	●	●	●

PICCO-080整体式小径镗刀

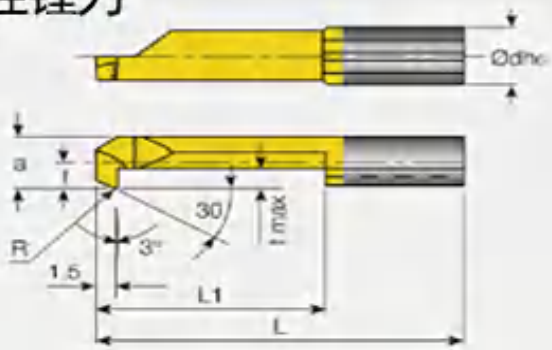

规格	ødh6	f	a	L	L_1	$R^{+0.05}$	t max	最小加工孔直径	YL10	YL740	YL930
PICCO R/L 080.0003-15	4.0	0.6	2.6	29	14	0.10	0.5	3.0	●	●	●
PICCO R/L 080.0003-20	4.0	0.6	2.6	34	19	0.10	0.5	3.0	●	●	●
PICCO R/L 080.0004-15	4.0	1.5	3.5	29	14	0.15	0.8	4.0	●	●	●
PICCO R/L 080.0004-25	4.0	1.5	3.5	39	24	0.15	0.8	4.0	●	●	●
PICCO R/L 080.0005-20	5.0	1.9	4.4	35	19	0.20	1.0	5.0	●	●	●
PICCO R/L 080.0005-30	5.0	1.9	4.4	45	29	0.20	1.0	5.0	●	●	●
PICCO R/L 080.0006-20	6.0	2.3	5.3	35	19	0.20	1.8	6.0	●	●	●
PICCO R/L 080.0006-30	6.0	2.3	5.3	45	29	0.20	1.8	6.0	●	●	●
PICCO R/L 080.0007-20	7.0	2.7	6.3	35	19	0.20	2.5	7.0	●	●	●
PICCO R/L 080.0007-30	7.0	2.7	6.3	45	29	0.20	2.5	7.0	●	●	●

PICCOR/L 004/005整体式小径镗刀

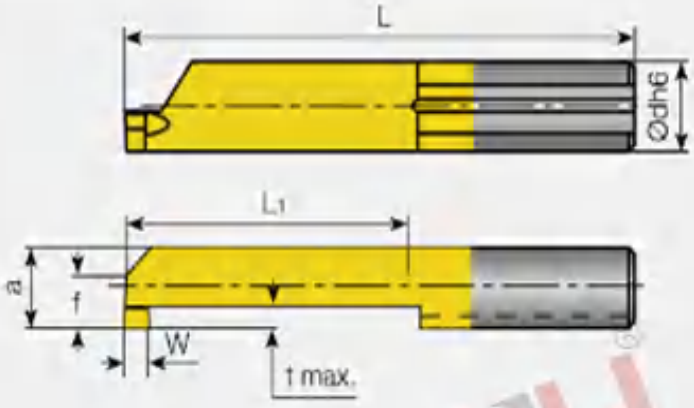

代号	ødh6	W+0.05	f	a	L	L1	t max	最小加工孔直径	YL10	YL740	YL930
PICCO R/L 004.0100-10	4.0	1.0	1.5	3.5	24	9	0.8	4.0	●	●	●
PICCO R/L 004.0100-16	4.0	1.0	1.5	3.5	30	15	0.8	4.0	●	●	●
PICCO R/L 004.0100-20	4.0	1.0	1.5	3.5	34	19	0.8	4.0	●	●	●
PICCO R/L 005.0100-10	5.0	1.0	1.9	4.4	25	9	1.0	5.0	●	●	●
PICCO R/L 005.0100-15	5.0	1.0	1.9	4.4	30	14	1.0	5.0	●	●	●
PICCO R/L 005.0100-20	5.0	1.0	1.9	4.4	35	19	1.0	5.0	●	●	●
PICCO R/L 005.0100-25	5.0	1.0	1.9	4.4	40	24	1.0	5.0	●	●	●
PICCO R/L 005.0100-30	5.0	1.0	1.9	4.4	45	29	1.0	5.0	●	●	●
PICCO R/L 005.0150-10	5.0	1.5	1.9	4.4	25	9	1.0	5.0	●	●	●
PICCO R/L 005.0150-15	5.0	1.5	1.9	4.4	30	14	1.0	5.0	●	●	●
PICCO R/L 005.0150-20	5.0	1.5	1.9	4.4	35	19	1.0	5.0	●	●	●
PICCO R/L 005.0150-25	5.0	1.5	1.9	4.4	40	24	1.0	5.0	●	●	●
PICCO R/L 005.0150-30	5.0	1.5	1.9	4.4	45	29	1.0	5.0	●	●	●
PICCO R/L 005.0200-10	5.0	2.0	1.9	4.4	25	9	1.0	5.0	●	●	●
PICCO R/L 005.0200-15	5.0	2.0	1.9	4.4	30	14	1.0	5.0	●	●	●
PICCO R/L 005.0200-20	5.0	2.0	1.9	4.4	35	19	1.0	5.0	●	●	●
PICCO R/L 005.0200-25	5.0	2.0	1.9	4.4	40	24	1.0	5.0	●	●	●
PICCO R/L 005.0200-30	5.0	2.0	1.9	4.4	45	29	1.0	5.0	●	●	●

PICCO-004-007整体式小径镗刀

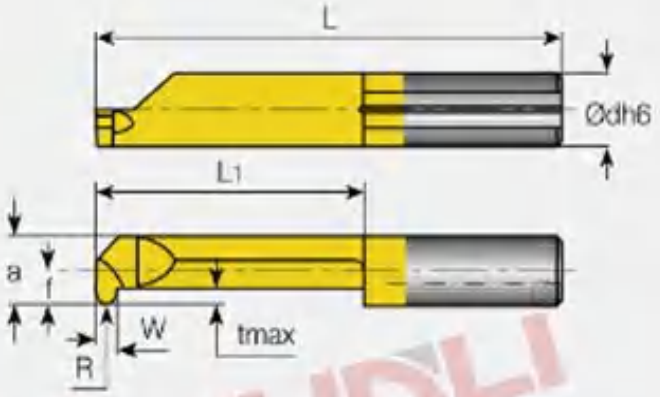

规格	ødh6	W+0.05	R	f	a	L	L1	t max	最小加工孔直径	YL10	YL740	YL930
PICCO R/L 004.0.50-16	4.0	1.0	0.50	1.5	3.5	30	15	0.8	4.0	●	●	●
PICCO R/L 005.0.50-20	5.0	1.0	0.50	1.9	4.4	35	19	1.0	5.0	●	●	●
PICCO R/L 005.0.75-20	5.0	1.5	0.75	1.9	4.4	35	19	1.0	5.0	●	●	●
PICCO R/L 005.1.00-20	5.0	2.0	1.00	1.9	4.4	35	19	1.0	5.0	●	●	●
PICCO R/L 006.0.50-25	6.0	1.0	0.50	2.3	5.3	40	24	1.8	6.0	●	●	●
PICCO R/L 006.0.75-25	6.0	1.5	0.75	2.3	5.3	40	24	1.8	6.0	●	●	●
PICCO R/L 006.1.00-25	6.0	2.0	1.00	2.3	5.3	40	24	1.8	6.0	●	●	●
PICCO R/L 007.0.50-30	7.0	1.0	0.50	2.7	6.3	45	29	2.5	6.8	●	●	●
PICCO R/L 007.0.75-30	7.0	1.5	0.75	2.7	6.3	45	29	2.5	6.8	●	●	●
PICCO R/L 007.1.00-30	7.0	2.0	1.00	2.7	6.3	45	29	2.5	6.8	●	●	●

PICCO R/L 006/007整体式小径镗刀

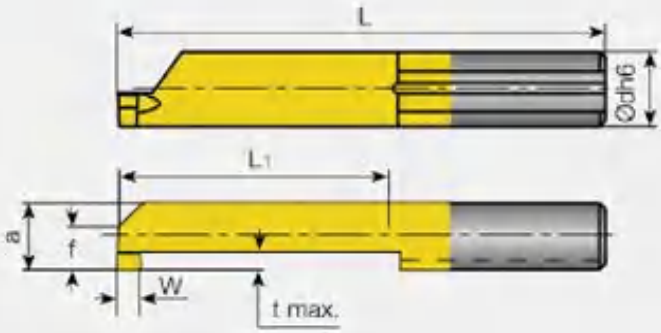

PICCO R/L 006

规格	ødh6	W+0.05	f	a	L	L1	t max	最小加工孔直径	YL10	YL740	YL930
PICCO R/L 006.0100-10	6.0	1.0	2.3	5.3	25	9	1.8	6.0	●	●	●
PICCO R/L 006.0100-15	6.0	1.0	2.3	5.3	30	14	1.8	6.0	●	●	●
PICCO R/L 006.0100-22	6.0	1.0	2.3	5.3	37	21	1.8	6.0	●	●	●
PICCO R/L 006.0100-25	6.0	1.0	2.3	5.3	40	24	1.8	6.0	●	●	●
PICCO R/L 006.0100-30	6.0	1.0	2.3	5.3	45	29	1.8	6.0	●	●	●
PICCO R/L 006.0150-10	6.0	1.5	2.3	5.3	25	9	1.8	6.0	●	●	●
PICCO R/L 006.0150-15	6.0	1.5	2.3	5.3	30	14	1.8	6.0	●	●	●
PICCO R/L 006.0150-22	6.0	1.5	2.3	5.3	37	21	1.8	6.0	●	●	●
PICCO R/L 006.0150-25	6.0	1.5	2.3	5.3	40	24	1.8	6.0	●	●	●
PICCO R/L 006.0150-30	6.0	1.5	2.3	5.3	45	29	1.8	6.0	●	●	●
PICCO R/L 006.0200-10	6.0	2.0	2.3	5.3	25	9	1.8	6.0	●	●	●
PICCO R/L 006.0200-15	6.0	2.0	2.3	5.3	30	14	1.8	6.0	●	●	●
PICCO R/L 006.0200-22	6.0	2.0	2.3	5.3	37	21	1.8	6.0	●	●	●
PICCO R/L 006.0200-25	6.0	2.0	2.3	5.3	40	24	1.8	6.0	●	●	●
PICCO R/L 006.0200-30	6.0	2.0	2.3	5.3	45	29	1.8	6.0	●	●	●

PICCO R/L 007

规格	ødh6	W+0.05	f	a	L	L1	t max	最小加工孔直径	YL10	YL740	YL930
PICCO R/L 007.0100-10	7	1.0	2.7	6.3	25	9	2.5	6.8	●	●	●
PICCO R/L 007.0100-15	7	1.0	2.7	6.3	30	14	2.5	6.8	●	●	●
PICCO R/L 007.0100-22	7	1.0	2.7	6.3	37	21	2.5	6.8	●	●	●
PICCO R/L 007.0100-25	7	1.0	2.7	6.3	40	24	2.5	6.8	●	●	●
PICCO R/L 007.0100-30	7	1.0	2.7	6.3	45	29	2.5	6.8	●	●	●
PICCO R/L 007.0150-10	7	1.5	2.7	6.3	25	9	2.5	6.8	●	●	●
PICCO R/L 007.0150-15	7	1.5	2.7	6.3	30	14	2.5	6.8	●	●	●
PICCO R/L 007.0150-22	7	1.5	2.7	6.3	37	21	2.5	6.8	●	●	●
PICCO R/L 007.0150-25	7	1.5	2.7	6.3	40	24	2.5	6.8	●	●	●
PICCO R/L 007.0150-30	7	1.5	2.7	6.3	45	29	2.5	6.8	●	●	●
PICCO R/L 007.0200-10	7	2.0	2.7	6.3	25	9	2.5	6.8	●	●	●
PICCO R/L 007.0200-15	7	2.0	2.7	6.3	30	14	2.5	6.8	●	●	●
PICCO R/L 007.0200-22	7	2.0	2.7	6.3	37	21	2.5	6.8	●	●	●
PICCO R/L 007.0200-25	7	2.0	2.7	6.3	40	24	2.5	6.8	●	●	●
PICCO R/L 007.0200-30	7	2.0	2.7	6.3	45	29	2.5	6.8	●	●	●

PICCO R/L 060整体式小径镗刀

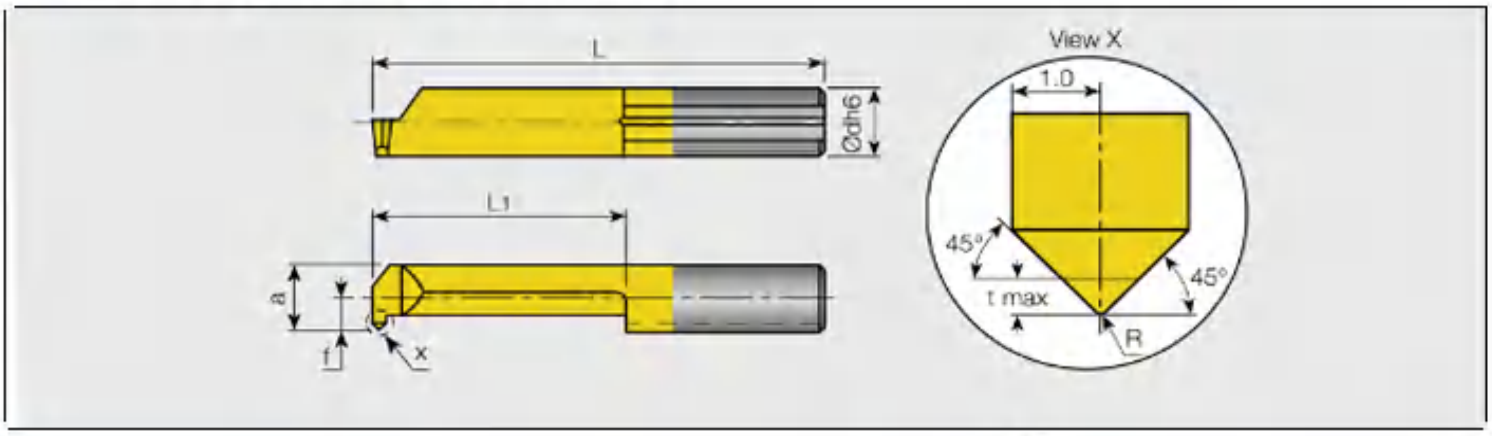

规格	ødh6	R±0.04	f	a	L	L1	t max	最小加工孔直径	YL10	YL740	YL930
PICCO R/L 060.5-15	5.0	0.2	1.9	4.4	30	14	0.7	5.0	●	●	●
PICCO R/L 060.5-20	5.0	0.2	1.9	4.4	35	19	0.7	5.0	●	●	●
PICCO R/L 060.7-20	7.0	0.2	2.7	6.3	35	19	0.7	6.8	●	●	●

PICCO R/L 070整体式小径镗刀

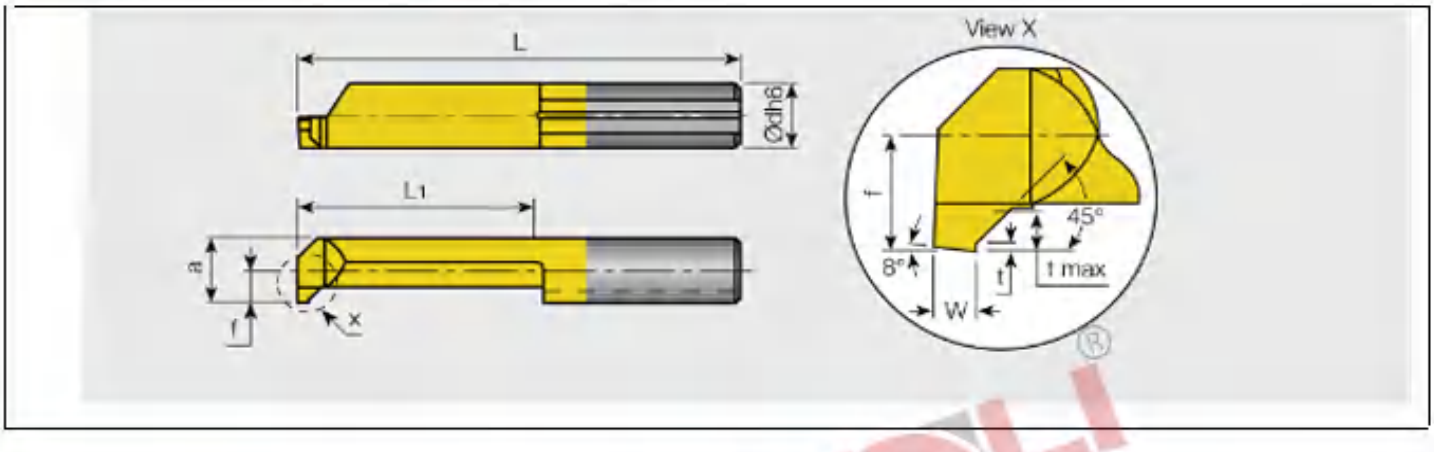

规格	ødh6	W	f	a	L	L1	t	t max	最小加工孔直径	YL10	YL740	YL930
PICCO R/L 070.5-15	5.0	1.0	1.9	4.4	30	14	0.2	1.0	5.0	●	●	●
PICCO R/L 070.5-20	5.0	1.0	1.9	4.4	35	19	0.2	1.0	5.0	●	●	●

单头内槽刀系列

型号	柄径大小D	槽宽	总长	YL10	YL740	YL930
D3.0-1.0-47L	3.0	1.0	47	●	○	●
D3.0-1.5-47L	3.0	1.5	47	●	○	●
D3.0-2.0-47L	3.0	2.0	47	●	○	●
D4.0-1.0-47L	4.0	1.0	47	●	○	●
D4.0-1.5-47L	4.0	1.5	47	●	○	●
D4.0-2.0-47L	4.0	2.0	47	●	○	●
D5.0-1.0-55L	5.0	1.0	55	●	○	●
D5.0-1.5-55L	5.0	1.5	55	●	○	●
D5.0-2.0-55L	5.0	2.0	55	●	○	●
D6.0-1.0-55L	6.0	1.0	55	●	○	●
D6.0-1.5-55L	6.0	1.5	55	●	○	●
D6.0-2.0-55L	6.0	2.0	55	●	○	●
D7.0-1.0-55L	7.0	1.0	55	●	○	●
D7.0-1.5-55L	7.0	1.5	55	●	○	●
D7.0-2.0-55L	7.0	2.0	55	●	○	●
D7.0-2.5-55L	7.0	2.5	55	●	○	●
D7.0-3.0-55L	7.0	3.0	55	●	○	●
–	–	–	–	–	–	–

双头内槽刀系列

型号	柄径大小D	槽宽	总长	YL10	YL740	YL930
D4.0-1.0-55L	4.0	1.0	55	●	○	●
D4.0-1.5-55L	4.0	1.5	55	●	○	●
D4.0-2.0-55L	4.0	2.0	55	●	○	●
D5.0-1.0-66L	5.0	1.0	66	●	○	●
D5.0-1.5-66L	5.0	1.5	66	●	○	●
D5.0-2.0-66L	5.0	2.0	66	●	○	●
D6.0-1.0-66L	6.0	1.0	66	●	○	●
D6.0-1.5-66L	6.0	1.5	66	●	○	●
D6.0-2.0-66L	6.0	2.0	66	●	○	●
D7.0-1.0-80L	7.0	1.0	80	●	○	●
D7.0-1.5-80L	7.0	1.5	80	●	○	●
D7.0-2.0-80L	7.0	2.0	80	●	○	●

YUNLI 允利刀具

双端面槽刀系列

型号	柄径大小D	槽宽	正反刀	总长	涂层		
					YL10	YL740	YL930
D4.0-1.0-R-55L	4.0	1.0	R	55	●	●	●
D4.0-1.5-R-55L	4.0	1.5	R	55	●	●	●
D4.0-2.0-R-55L	4.0	2.0	R	55	●	●	●
D5.0-1.0-R-66L	5.0	1.0	R	66	●	●	●
D5.0-1.5-R-66L	5.0	1.5	R	66	●	●	●
D5.0-2.0-R-66L	5.0	2.0	R	66	●	●	●
D6.0-1.0-R-66L	6.0	1.0	R	66	●	●	●
D6.0-1.5-R-66L	6.0	1.5	R	66	●	●	●
D6.0-2.0-R-66L	6.0	2.0	R	66	●	●	●
D7.0-1.0-R-80L	7.0	1.0	R	80	●	●	●
D7.0-1.5-R-80L	7.0	1.5	R	80	●	●	●
D7.0-2.0-R-80L	7.0	2.0	R	80	●	●	●
D7.0-2.5-R-80L	7.0	2.5	R	80	●	●	●
D7.0-3.0-R-80L	7.0	3.0	R	80	●	●	●
D4.0-1.0-L-55L	4.0	1.0	L	55	●	●	●
D4.0-1.5-L-55L	4.0	1.5	L	55	●	●	●
D4.0-2.0-L-55L	4.0	2.0	L	55	●	●	●
D5.0-1.0-L-66L	5.0	1.0	L	66	●	●	●
D5.0-1.5-L-66L	5.0	1.5	L	66	●	●	●
D5.0-2.0-L-66L	5.0	2.0	L	66	●	●	●
D6.0-1.0-L-66L	6.0	1.0	L	66	●	●	●
D6.0-1.5-L-66L	6.0	1.5	L	66	●	●	●
D6.0-2.0-L-66L	6.0	2.0	L	66	●	●	●
D7.0-1.0-L-80L	7.0	1.0	L	80	●	●	●
D7.0-1.5-L-80L	7.0	1.5	L	80	●	●	●
D7.0-2.0-L-80L	7.0	2.0	L	80	●	●	●
D7.0-2.5-L-80L	7.0	2.5	L	80	●	●	●
D7.0-3.0-L-80L	7.0	3.0	L	80	●	●	●

整体式小镗刀系列

型号	柄径D	d	L	总长	YL10	YL740	YL930
D5.0-d1.5-2.5L-35	5.0	1.5	2.5	35	●	○	●
D5.0-d1.5-3.0L-35	5.0	1.5	3.0	35	●	○	●
D6.0-d1.0-2.5L-35	6.0	1.0	2.5	35	●	○	●
D6.0-d1.5-2.5L-35	6.0	1.5	2.5	35	●	○	●
D6.0-d1.5-3.0L-35	6.0	1.5	3.0	35	●	○	●
D6.0-d1.0-3.0L	6.0	1.0	3.0	–	●	○	●
D6.0-d1.0-6.0L	6.0	1.0	6.0	–	●	○	●
D6.0-d1.5-6.0L	6.0	1.5	6.0	–	●	○	●
D6.0-d1.5-8.0L	6.0	1.5	8.0	–	●	○	●
D6.0-d2.0-12.0L	6.0	2.0	12.0	–	●	○	●
D6.0-d0.8-4.0L	6.0	0.8	4.0	–	●	○	●
D6.0-d1.0-5.0L	6.0	1.0	5.0	–	●	○	●
D6.0-d1.0-4.0L	6.0	1.0	4.0	–	●	○	●
D6.0-d2.0-10.0L	6.0	2.0	10.0	–	●	○	●

整体式正反双头牙刀

型号	D	总长	正反牙刀	YL10	YL740	YL930
YL-D3.0-50L	3.0	50	反双头牙刀	●	○	●
YL-D4.0-50L	4.0	50	反双头牙刀	●	○	●
YL-D5.0-66L	5.0	66	反双头牙刀	●	○	●
YL-D6.0-66L	6.0	66	反双头牙刀	●	○	●
YL-D7.0-80L	7.0	80	反双头牙刀	●	○	●
YL-D6.0-66L-55°	6.0	66	双头牙刀	●	○	●

整体式小镗刀

型号	D	有效加工长度	YL10	YL740	YL930
D3.0短深L10	3.0	10	●	○	●
D3.0短深L15	3.0	15	●	○	●
D4.0短深L10	4.0	10	●	○	●
D4.0短深L15	4.0	15	●	○	●

VNB-S型 (内径加工) (刀尖角R (rε) 负公差)

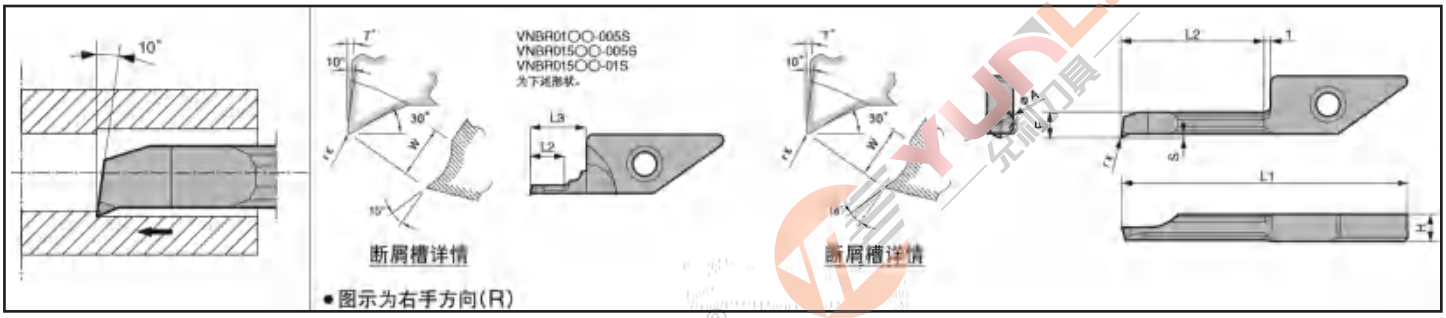

型状 The basic shape of inserts	型号 Ordering Code	最小加工径	尺寸Dimensions(mm)									材质Grade		
		⌀A	r ε	⌀D	H	L1	L2	L3	F	S	D	YL10	YL930	YL740
	VNBR0103-005S	1.0	+0 -0.02 0.05	-	3.9	26.5	3.0	7.0	0.85	0.2	-	●	●	●
	VNBR0105-005S						5.0					●	●	●
	VNBR1503-005S	1.5					3.0		1.3			●	●	●
	VNBR01505-005S						5.0					●	●	●
	VNBR0206-005S	2.0					6.0	-	1.8	0.25		●	●	●
	VNBR025075-005S	2.5				28.1	7.5		2.1	0.4		●	●	●
	VNBR0311-005S	3.0				30.8	11.0		2.6	0.4		●	●	●
	VNBR03515-005S	3.5				34.8	15.0		3.0	0.5		●	●	●
	VNBR0411-005S	4.0				30.8	11.0		3.5	0.5		●	●	●
	VNBR0420-005S					39.8	20.0					●	●	●
	VNBR01503-01S	1.5	+0 -0.03 0.1		3.9	26.5	3.0	7.0	1.3	0.2		●	●	●
	VNBR01505-01S						5.0					●	●	●
	VNBR0206-01S	2.0					6.0	-	1.8	0.25		●	●	●
	VNBR025075-01S	2.5				28.1	7.5		2.1	0.4		●	●	●
	VNBR0311-01S	3.0				30.8	11.0		2.6	0.4		●	●	●
	VNBR03515_01S	3.5				34.8	15.0		3.0	0.5		●	●	●
	VNBR0411-01S	4.0				30.8	11.0		3.5	0.5		●	●	●
	VNBR0420_01S					39.8	20.0					●	●	●
	VNBR0411-02S	4.0	+0 -0.04 0.2		3.9	30.8	11.0	-	3.5	0.5		●	●	●
	VNBR0420-02S					39.8	20.0					●	●	●

VNBT型 (提拉加工)

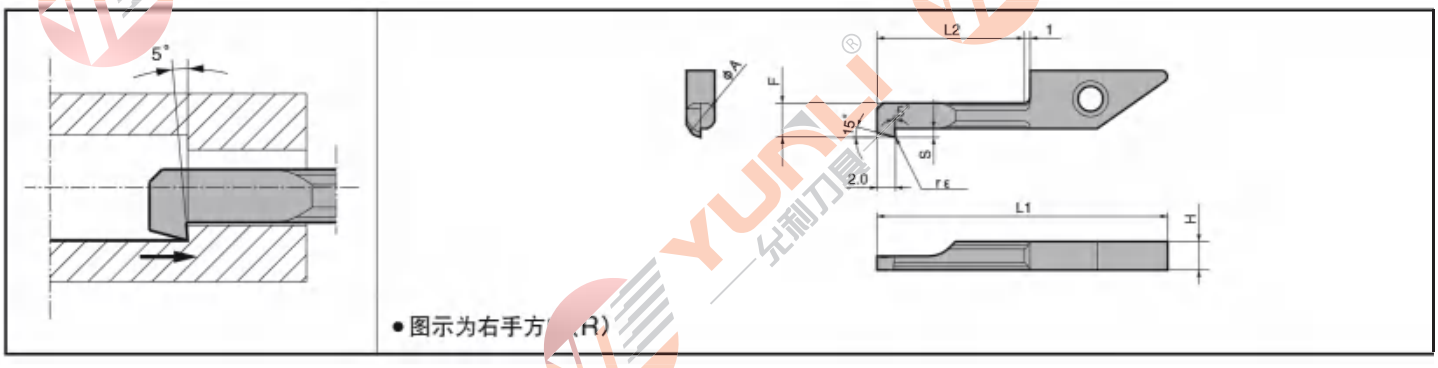

型状 The basic shape of inserts	型号 Ordering Code	最小加工径	尺寸Dimensions(mm)									材质Grade		
		⌀A	r ε	⌀D	H	L1	L2	L3	F	S	D	YL10	YL930	YL740
	VNBTR0411-03	4	0.03	-	3.9	30.8	11	-	3.6	1.0	-	●	●	●
	VNBTR0420-03					39.8	20					●	●	●
	VNBTR0511-03	5				30.8	11		4.6	1.3		●	●	●
	VNBTR0520-03					39.8	20					●	●	●
	VNBTR0411-01	4	0.1		3.9	30.8	11		3.6	1.0		●	●	●
	VNBTR0420-01					39.8	20					●	●	●
	VNBTR0511-01	5				30.8	11		4.6	1.3		●	●	●
	VNBTR0520_01					39.8	20					●	●	●

VNB型 (内径加工)

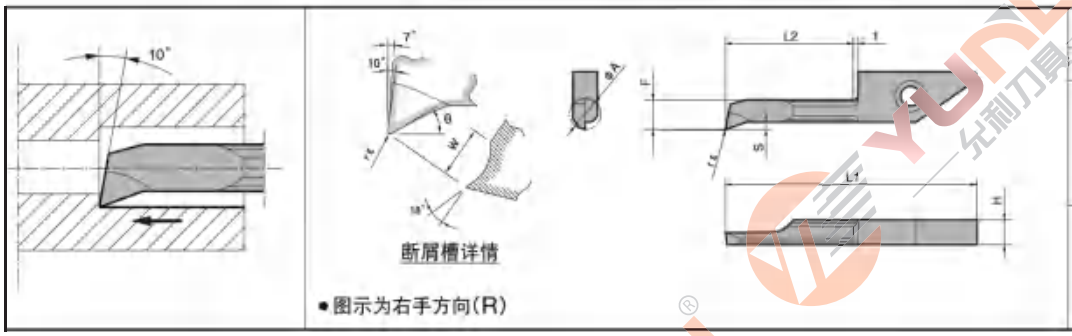

-NB 型（无断屑槽）刀尖部形状

刀尖部形状	材质
	金属陶瓷 涂层硬质合金 硬质合金
	CBN PCD(金刚石)

型状 The basic shape of inserts	型号 Ordering Code	最小加工径	尺寸Dimensions(mm)									材质Grade		
		ØA	r_ε	ØD	H	L1	L2	L3	F	S	D	YL10	YL930	YL740
	VNBR0206-003	2	0.03	-	3.9	26.5	6	-	1.8	0.25	-	●	●	●
	VNBR0311-003	3				30.8	11		2.6	0.4		●	●	●
	VNBR0411-003	4							3.5	0.5		●	●	●
	VNBR0420-003					39.8	20					●	●	●
	VNBR0511-003	5				30.8	11		4.5	0.7		●	●	●
	VNBR0520-003					39.8	20					●	●	●
	VNBR0620-003	6							5.3	1.0		●	●	●
	VNBR0630-003					49.8	30					●	●	●
	VNBR0720-003	7				39.8	20		6.2	1.0		●	●	●
	VNBR0730-003					49.8	30					●	●	●
	VNBR0206-01	2	0.1		3.9	26.5	6		1.8	0.25		●	●	●
	VNBR0311-01	3				30.8	11		2.6	0.4		●	●	●
	VNBR0411-01	4							3.5	0.5		●	●	●
	VNBR0420-01					39.8	20					●	●	●
	VNBR0511-01	5				30.8	11		4.5	0.7		●	●	●
	VNBR0520-01					39.8	20					●	●	●
	VNBR0620-01	6							5.3	1.0		●	●	●
	VNBR0630-01					49.8	30					●	●	●
	VNBR0720-01	7				39.8	20		6.2	1.0		●	●	●
	VNBR0730-01					49.8	30					●	●	●
	VNBR0206-02	2	0.2		3.9	26.5	6		1.8	0.25		●	●	●
	VNBR0311-02	3				30.8	11		2.6	0.4		●	●	●
	VNBR0411-02	4							3.5	0.5		●	●	●
	VNBR0420-02					39.8	20					●	●	●
	VNBR0511-02	5				30.8	11		4.5	0.7		●	●	●
	VNBR0520-02					39.8	20					●	●	●
	VNBR0620-02	6							5.3	1.0		●	●	●
	VNBR0630-02					49.8	30					●	●	●
	VNBR0720-02	7				39.8	20		6.2	1.0		●	●	●
	VNBR0730-02					49.8	30					●	●	●
	VNBR0206-003NB	2	0.03		3.9	26.5	6		1.8	0.25		●	●	●
	VNBR0311-003NB	3				30.8	11		2.6	0.4		●	●	●
	VNBR0411-003NB	4							3.5	0.5		●	●	●
	VNBR0420-003NB					39.8	20					●	●	●
	VNBR0511-003NB	5				30.8	11		4.5	0.7		●	●	●
	VNBR0520-003NB					39.8	20					●	●	●
	VNBR0620-003NB	6							5.3	1.0		●	●	●
	VNBR0630-003NB					49.8	30					●	●	●
	VNBR0720-003NB	7				39.8	20		6.2	1.0		●	●	●
	VNBR0730-003NB					49.8	30					●	●	●
	VNBR0206-02NB	2	0.2		3.9	26.5	6		1.8	0.25		●	●	●
	VNBR0311-02NB	3				30.8	11		2.6	0.4		●	●	●
	VNBR0411-02NB	4							3.5	0.5		●	●	●
	VNBR0420-02NB					39.8	20					●	●	●
	VNBR0511-02NB	5				30.8	11		4.5	0.7		●	●	●
	VNBR0520-02NB					39.8	20					●	●	●
	VNBR0620-02NB	6							5.3	1.0		●	●	●
	VNBR0630-02NB					49.8	30					●	●	●
	VNBR0720-02NB	7				39.8	20		6.2	1.0		●	●	●
	VNBR0730-02NB					49.8	30					●	●	●

VNG型 (内径加工)

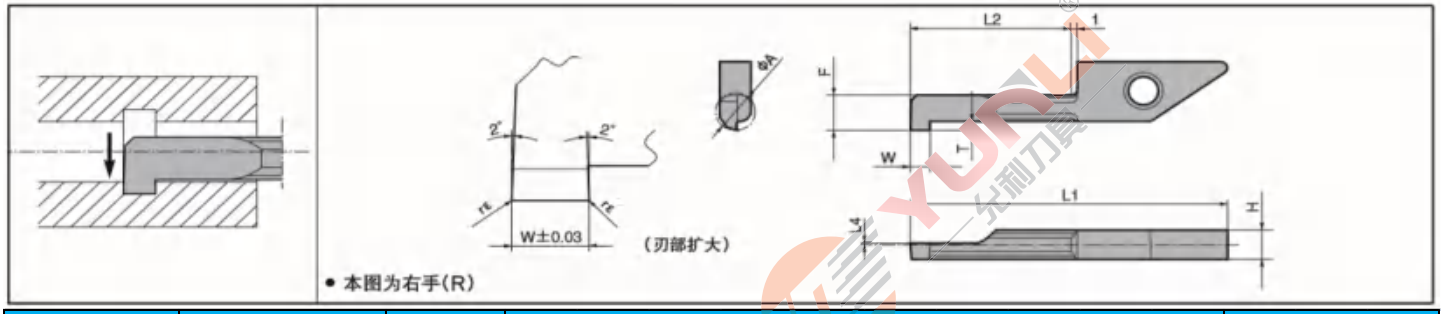

型状 The basic shape of inserts	型号 Ordering Code	最小加工径	尺寸Dimensions(mm)										材质Grade		
		⌀A	r ε	⌀D	H	L1	L2	L3	L4	F	T	θ	YL10	YL930	YL740
	VNGR0410-11	4	0.05		3.9	30.8	11	-	0.1	3.5	0.8	-	●	●	●
	VNGR0420-11												●	●	●
	VNGR0510-11	5	0.05							4.4	1.0		●	●	●
	VNGR0520-11												●	●	●
	VNGR0610-20	6	0.05			39.8	20		0.3	5.2	1.8		●	●	●
	VNGR0620-20												●	●	●
	VNGR0710-20	7	0.05							6.2	2.0		●	●	●
	VNGR0720-20												●	●	●
	VNGR0410-11NB	4	0.05		3.9	30.8	11		0.1	3.5	0.8		●	●	●
	VNGR0420-11NB												●	●	●
	VNGR0510-11NB	5	0.05							4.4	1.0		●	●	●
	VNGR0520-11NB												●	●	●
	VNGR0610-20NB	6	0.05			39.8	20		0.3	5.2	1.8		●	●	●
	VNGR0620-20NB												●	●	●
	VNGR0710-20NB	7	0.05							6.2	2.0		●	●	●
	VNGR0720-20NB												●	●	●

VNT型 (内径加工)

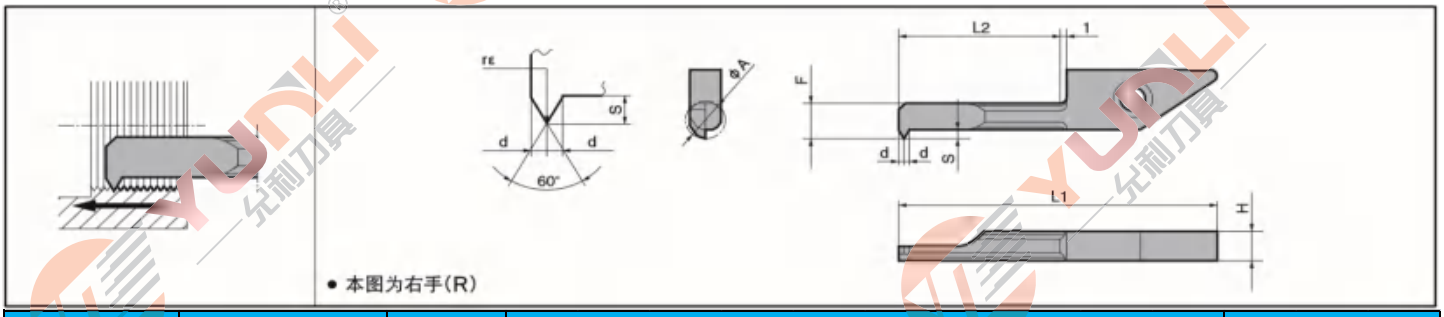

型状 The basic shape of inserts	型号 Ordering Code	最小加工径	尺寸Dimensions(mm)										材质Grade		
		⌀A	r ε	⌀D	H	L1	L2	L3	L4	F	S	D	YL10	YL930	YL740
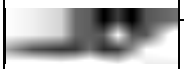	VNTR045-11	4.5	+0 -0.02 0.05	-	3.9	30.8	11	-	-	3.6	1.3	0.6	●	●	●
	VNTR060-11	6.0								4.6	1.6	0.8	●	●	●

VNFG型 (内径加工)

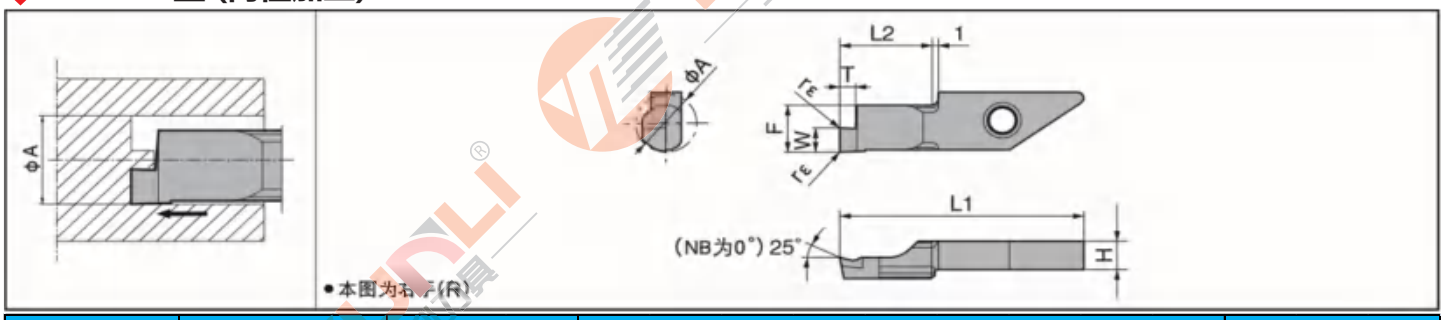

型状 The basic shape of inserts	型号 Ordering Code	最小加工径⌀A		尺寸Dimensions(mm)									材质Grade		
		min	max	W±0.03	r ε	⌀D	H	L1	L2	L3	F	T	YL10	YL930	YL740
	VNFGR0810-10	8(0)	8(∞)	1.0	0.05	-	3.9	29.6	10	-	7.3	2.0	●	●	●
	VNFGR0820-10			2.0									●	●	●
	VNFGR0830-10			3.0								3.0	●	●	●
	VNFGR0820-10NG			2.0	0.05		3.9	29.6	10		7.3	2.0	●	●	●
	VNFGR0830-10NB			3.0								3.0	●	●	●

SVNSR 方柄图

型号		库存	尺寸（mm） H1=h	B	L1	L2	L3	L4	F1	F2	F3	形状	零件 紧固螺钉	扳手 FT / LTW	固定螺钉
SVNR	1010H-12N	●	10	10	100	22	-	-	10	-	-	图1	SB-3080TR	FT-10	SP3×4
	1212K-12N	●	12	12	125				12						
	1616K-12N	●	16	16					16						
	2020K-12N	●	20	20					20						
	2525M-12N	●	25	25	150				25						
SVNSR	1010K-12-06N	●	10	10	125	45	10	12	10	29	6	图2	SB-3080TR	LTW-10S	-
	1010K-12-11N	●	10	10	125		10	12	10	33	11				
	1212M-12-06N	●	12	12	150		10	12	12	29	6				
	1212M-12-11N	●	12	12	150		10	12	12	33	11				
	1212M-12-20N	●	12	12	150		10	13	12	42	20				
	1616M-12-06N	●	16	16	150		16	12	16	29	6				
	1616M-12-11N	●	16	16	150		16	12	16	33	11				

SVN-N 型（无侧固装置）

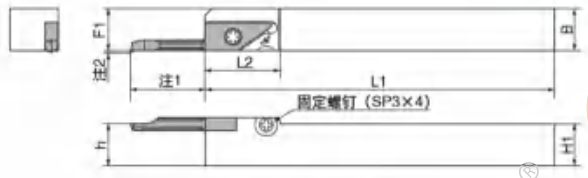

图 1（SVN-N 型）

SVNS-N 型（无侧固装置 / 无固定螺钉）

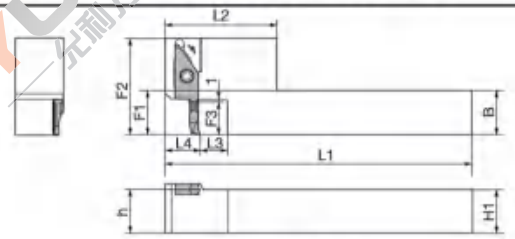

图 2（SVNS-N 型）

• 图示为右手方向(R)

右手(R)刀片适用于右手(R)刀杆

小径方刀杆

SVN 圆刀杆尺寸

型号	库存	尺寸(mm) φD1	φD2	H	L1	L2	F1		形状	零件 紧固螺钉	扳手	固装置	固定螺钉	扳手	适用刀片
S12F-SVNR12N	●	12	20	11	80	23	4		图1	SB-3080TR	FT-10	-	SP3×4	-	VNBR....-.. VNBTR....-... VNGR....-.. VNFGR....-.. VNTR....-..
S14G-SVNR12N	●	14	20	13	90										
S16H-SVNR12N	●	16	24	15	100		4								
S19H-SVNR12N	●	19.05	24	17	100	24									
S19N-SVNR12N	●				160										
S20H-SVNR12N	●	20	24	18	100										
S25H-SVNR12N	●	25.4	30	23	100										
S25Q-SVNR12N	●				160										
S19H-SVNR12SN	●	19.05	18.5	17	100	23	4		图2	SB-3080TR	FT-10	-	SP3×4	-	
S20H-SVNR12SN	●	20	19.5	18											
S22K-SVNR12SN	●	22	21.5	20	125										
S25.0G-SVNR12SN	●	25	24.5	23	90										

S---SVN-N型 (无侧固装置：一般型)

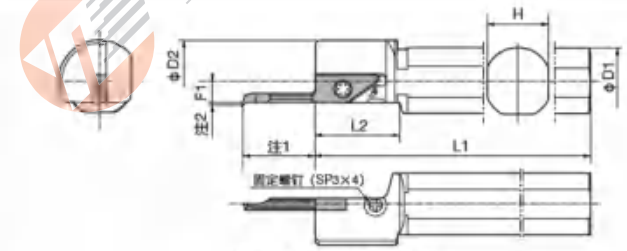

图 1（S···SVN-N 型）

S---SVN-SN型 (无侧固装置：直柄型)

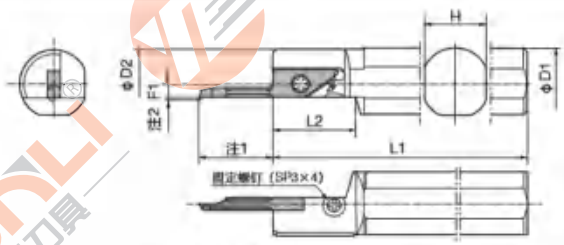

图 2（S···SVN-SN 型）

• 图示为右手方向(R)

右手(R)刀片适用于右手(R)刀杆

● 小径圆刀杆

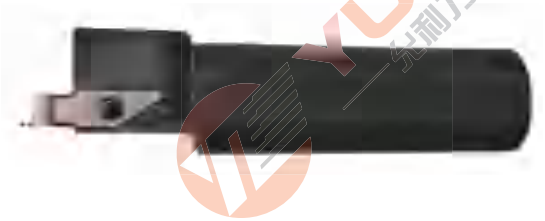

● 小径直柄型圆刀杆

SVN-N 型（无侧固装置）

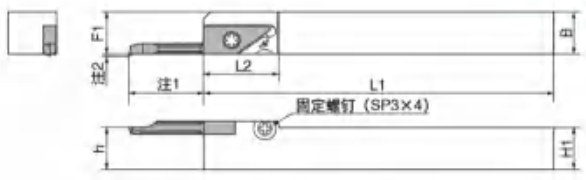

图 1（SVN-N 型）

SVNS-N 型（无侧固装置 / 无固定螺钉）

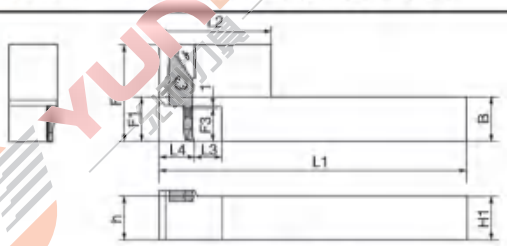

图 2（SVNS-N 型）

• 图示为右手方向(R)

右手(R)刀片适用于右手(R)刀杆

型号			尺寸(mm)									零件			适用刀片	库存
			H1=h	B	L1	L2	L3	L4	F1	F2	F3	紧固螺钉	扳手	固定螺钉		
	SVNR	1010H-12N	10	10	100	22	-	-	10	-	-	SB-3080TR	FT-10	SP3×4	VNBR...-...	●
		1212K-12N	12	12	125	22			12						VNBTR...-...	●
		1616K-12N	16	16	125	22			16						VNGR...-...	●
		2020K-12N	20	20	125	22			20						VNFGR...-...	●
		2525M-12N	25	25	150	22			25						VNTR...-...	●
	SVNSR	1010K-12-06N	10	10	125	45	10	12	10	29	6	SB-3080TR	LTW-10S	-	(VNBR..06-..)※	●
		1010K-12-11N	10	10	125	45	10	12	10	33	11				(VNBR..11-..)※ (VNBTR..11-...)※ (VNGR....-11)※ (VNTR...-11)※	●
		1212M-12-06N	12	12	150	45	10	12	12	29	6				(VNBR..06-..)※	●
		1212M-12-11N	12	12	150	45	10	12	12	33	11				(VNBR..11-..)※ (VNBTR..11-...)※ (VNGR....-11)※ (VNTR...-11)※	●
		1212M-12-20N	12	12	150	45	10	13	12	42	20				(VNBR...20-...)※ (VNBTR...20-...)※ (VNGR....-20)※	●
		1616M-12-06N	16	16	150	45	16	12	16	29	6				(VNBR..06-..)※	●
		1616M-12-11N	16	16	150	45	16	12	16	33	11				(VNBR..11-..)※ (VNBTR..11-...)※ (VNGR....-11)※ (VNTR...-11)※	●
		1616M-12-20N	16	16	150	45	16	13	16	42	20				(VNBR...20-...)※ (VNBTR...20-...)※ (VNGR....-20)※	●
	SVNSR	1010K-12-06XN	10	10	125	45	10	-	10	29	6	SB-3080TR	LTW-10S	SP3×4	(VNBXR02..)	●
		1010K-12-11N	10	10	125	45	10		10	33	11				(VNBXR..11..)	●
		1212M-12-06XN	12	12	150	45	10		12	29	6				(VNBXR02..)	●
		1212M-12-11XN	12	12	150	45	10		12	33	11				(VNBXR..11..)	●
		1212M-12-20XN	12	12	150	45	10		12	42	20				(VNBXR0420..)	●
		1616M-12-06XN	16	16	150	45	16		16	29	6				(VNBXR02..)	●
		1616M-12-11XN	16	16	150	45	16		16	33	11				(VNBXR..11..)	●
		1616M-12-20XN	16	16	150	45	16		16	42	20				(VNBXR0420..)	●

TWBR/L 极小内径加工(横置式)

型号		最小加工径	尺寸(mm)			库存		
		ΦA	F	S	r ε	YL10	YL930	YL740
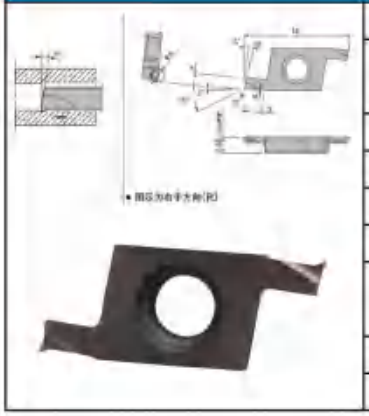	TWBR/L 01003-005	1.0	0.85	0.2	+0 -0.02 0.05	●	●	○
	TWBR/L 01503-005	1.5	1.30	0.2		●	●	○
	TWBR/L 02003-005	2.0	1.75	0.25		●	●	○
	TWBR/L 02503-005	2.5	2.10	0.3		●	●	○
	TWBR/L 03003-005	3.0	2.40	0.4		●	●	○
	TWBR/L 01503-010	1.5	1.30	0.2	+0 -0.03 0.1	●	●	○
	TWBR/L 02003-010	2.0	1.75	0.25		●	●	○
	TWBR/L 02503-010	2.5	2.10	0.3		●	●	○
	TWBR/L 03003-010	3.0	2.40	0.4		●	●	○

TWBTR/L

型号		最小加工径ΦA	尺寸(mm)			库存		
			F	S	r ε	YL10	YL930	YL740
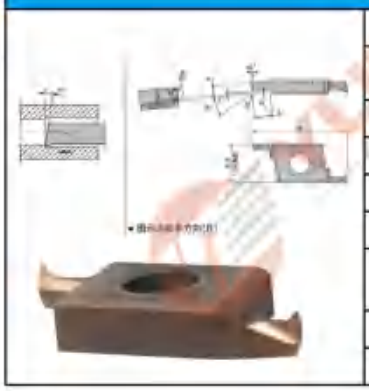	TWBTR/L 01003-005	1.0	0.85	0.20	+0 -0.02 0.05	●	●	○
	TWBTR/L 01503-005	1.5	1.30			●	●	○
	TWBTR/L 02003-005	2.0	1.75	0.25		●	●	○
	TWBTR/L 02503-005	2.5	2.10	0.30		●	●	○
	TWBTR/L 03003-005	3.0	2.40	0.40		●	●	○
	TWBTR/L 01503-010	1.5	1.30	0.20	+0 -0.03 0.1	●	●	○
	TWBTR/L 02003-010	2.0	1.75	0.25		●	●	○
	TWBTR/L 02503-010	2.5	2.10	0.30		●	●	○
	TWBTR/L 03003-010	3.0	2.40	0.40		●	●	○

TWFGTR/L

型号		端面切槽外径ΦA		尺寸(mm)			角度(°)	库存		
		MIN.	MAX.	W	r ε	B	θ	YL10	YL930	YL740
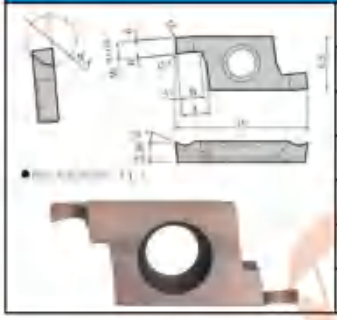	TWFGTR/L050	6 (0)	8 (∞)	0.5	0.05	1.0	1.5°	●	●	○
	TWFGTR/L080			0.8		1.5		●	●	○
	TWFGTR/L100			1		2.2	2°	●	●	○
	TWFGTR/L125			1.25				●	●	○
	TWFGTR/L150			1.5				●	●	○
	TWFGTR/L180			1.8		3.0		●	●	○
	TWFGTR/L200			2.0				●	●	○

TWFGR/L

型号		端面切槽外径 ΦA		尺寸(mm)			角度(°)	库存		
		MIN.	MAX.	W	r ε	B	θ	YL10	YL930	YL740
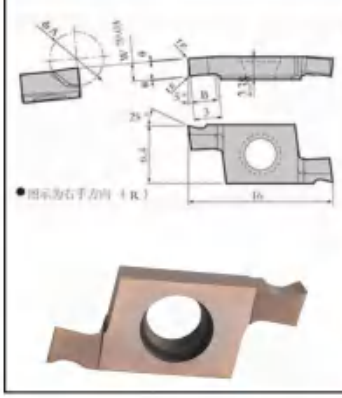	TWFGR/L050	6 (0)	8 (∞)	0.5	0.05	1.0	1.5°	●	●	○
	TWFGR/L080			0.8		1.5		●	●	○
	TWFGR/L100			1		2.2	2°	●	●	○
	TWFGR/L125			1.25				●	●	○
	TWFGR/L150			1.5				●	●	○
	TWFGR/L180			1.8		3.0		●	●	○
	TWFGR/L200			2.0				●	●	○

STWS刀杆

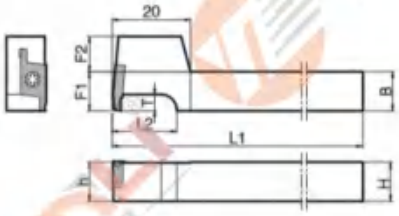

● 图示为右手方向(R)

型号			尺寸(mm)								零件		适用刀片	库存
											紧固螺钉	扳手		
			H1-h	B	L1	L2	L3	F1	F2	T				
	STWSR	1010JX-15T	10	10	120	16	-	10	9	3	SB-3080TR	LTW-10S	TWFGTR○○○	●
		1212JX-15T	12	12				12	7					●
		1616JX-15T	16	16		20		16	3					●
		2020JX-15T	20	20	125	25		20						●
	STWSR	1010F-15T	10	10	85	16		10	9					●
		1212F-15T	12	12	85			12	7					●

STW刀杆

• 图示为右手方向(R)　　右手(R)刀杆使用右手(R)刀片，(左手(L)刀杆使用左手(L)刀片)

型号			尺寸(mm)								零件		适用刀片	库存
											紧固螺钉	扳手		
			H1=h	B	L1	L2	L3	F1	F2	T				
	STWR	1212F-15	12	12	85	-	-	12	-	3	SB-3080TR	LTW-10S	TWBR---	●
		1212K-15	12	12	125			12						●
		1616K-15	16	16				16						●
		2020K-15	20	20			25	25						●
		2525M-15	25	25	150			32						●

型号			尺寸(mm)								零件		适用刀片	库存	
											紧固螺钉	扳手			
			H1=h	B	L1	L2	L3	F1	F2	T				R	L
	STWL	1010F-15	10	10	85	-	-	10	-	3	SB-3080TR	LTW-10S	TWFGL O O O	●	●
		1212F-15	12	12				12						●	●
		1212K-15	12	12	125			12						●	●
		1616K-15	16	16	125			16						●	●
		2020K-15	20	20	125		25	25						●	●
		2525M-15	25	25	150			32						●	●

STWS刀杆

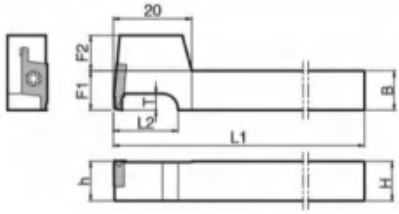

• 图示为右手方向(R)

型号			尺寸(mm)								零件		适用刀片	库存
			H1=h	B	L1	L2	L3	F1	F2	T	紧固螺钉	扳手		
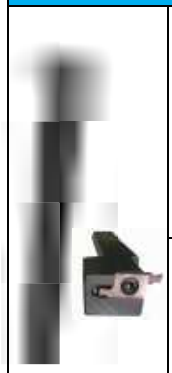	STWSR	1010JX-15T	10	10	120	16	-	10	-	3	SB-3080TR	LTW-10S	TWBTR-- TWFGTR--	●
		1212JX-15T	12	12		16		12						●
		1616JX-15T	16	16		20		16						●
	STWSR	1010F-15T	10	10	85	16	-	10						●
		1212F-15T	12	12		16		12						●

STW横置式

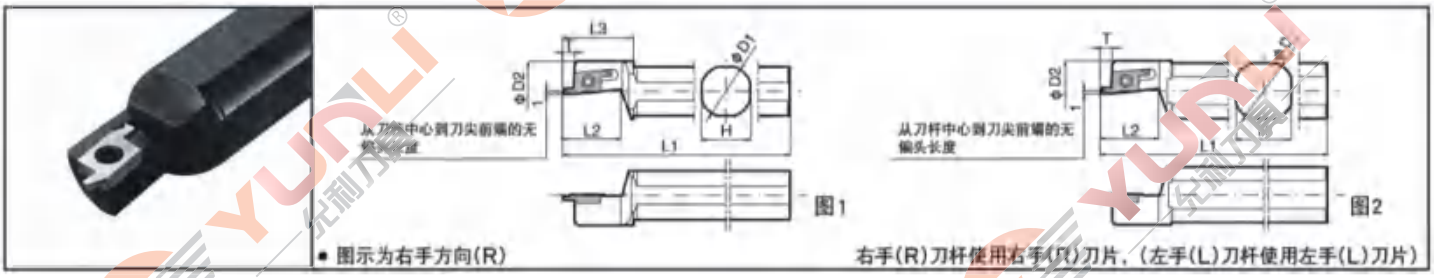

型号		尺寸(mm)							零件		适用刀片	库存
		ΦD1	ΦD2	H	L1	L2	L3	T	紧固螺钉	扳手		
	S12F-STWR15	12.000	20	11	80	18	22	3	SB-3080TR	LTW-10S	TWBR---	●
	S14H-STWR15	14.000		13	100							●
	S15F-STWR15	15.875		15	85							●
	S16F-STWR15	16.000										●
	S19G-STWR15	19.050	18.5	17	90		-	3				●
	S19K-STWR15				120							●
	S20G-STWR15	20.000	19.5	18	90							●
	S20K-STWR15				120							●
	S22K-STWR15	22.000	21.5	20	125	22						●
	S25.0J-STWR15	25.000	24.5	23	110							●
	S25K-STWR15	25.400	25.0	23	120							●

KBMX-T型（内径加工用）

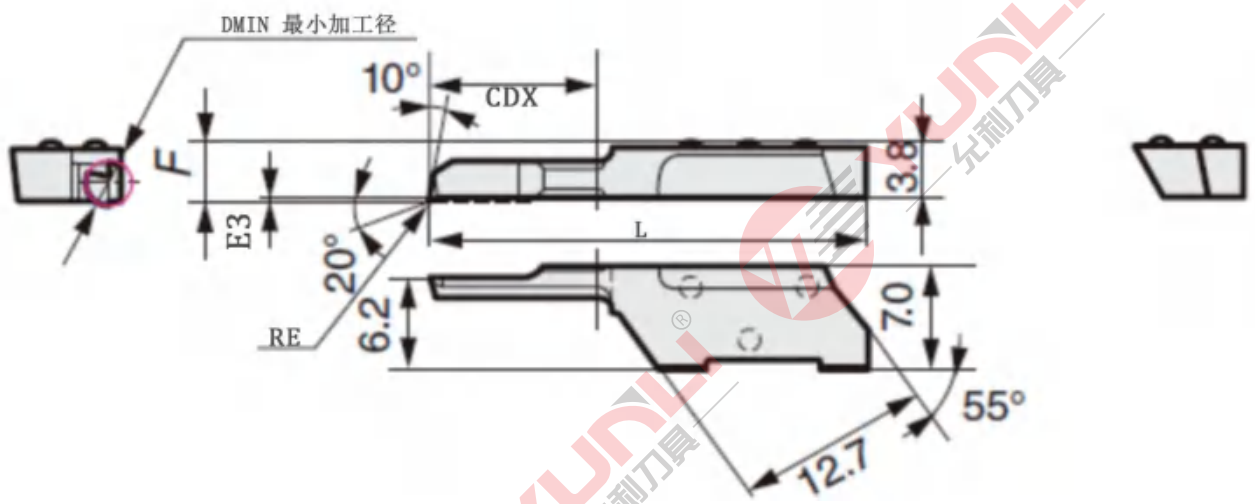

型号	最小加工直径	尺寸Dimensions(mm)					材质Grade	
		刀尖位置	偏置量	刀尖半径	全长	加工深度		
Ordering Code	DMIN	F	E3	RE	L	CDX	YL10	YL930
KBMXR0103-05	1.0	4.00	0.20	0.05	20.5	3	●	●
KBMXR0103-20				0.20			●	●
KBMXR01506-05	1.5	4.05	0.25	0.05	23.5	6	●	●
KBMXR01506-20				0.20			●	●
KBMXR0206-05	2.0	4.05	0.25	0.05	23.5	6	●	●
KBMXR0206-20				0.20			●	●
KBMXR0311-05	3	4.10	0.30	0.05	28.5	11	●	●
KBMXR0311-20				0.20			●	●
KBMXR0411-05	4.0	4.30	0.50	0.05	28.5	11	●	●
KBMXR0411-20				0.20			●	●
KBMXR0420-05	4	4.30	0.50	0.05	37.5	20	●	●
KBMXR0420-20				0.20			●	●
KBMXR0511-05	5.0	4.50	0.70	0.05	28.5	11	●	●
KBMXR0511-20				0.20			●	●
KBMXR0520-05	4.5	4.50	0.70	0.05	37.5	20	●	●
KBMXR0520-20				0.20			●	●

订货示例：MB-07G150-00-10R　YL740　　接受非标定制　　● 为标准库存　○ 为非标准库存

KBMX-T型（内径加工用）

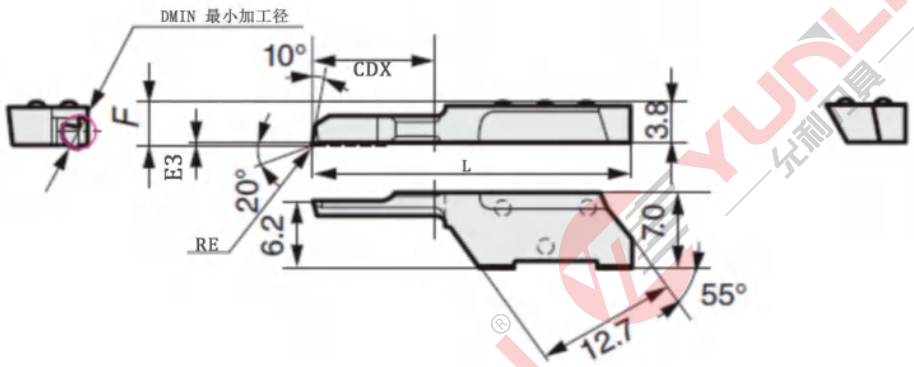

型号	最小加工直径	尺寸Dimensions(mm)					材质Grade	
		刀尖位置	偏置量	刀尖半径	全长	加工深度		
Ordering Code	⌀A	F	E3	RE	L	CDX	YL10	YL930
KBMXR0103-05T	1.0	4.00	0.20	0.05	20.5	3	●	●
KBMXR0103-20T				0.20			●	●
KBMXR01506-05T	1.5	4.05	0.25	0.05	23.5	6	●	●
KBMXR01506-20T				0.20			●	●
KBMXR0206-05T	2.0	4.05	0.25	0.05	23.5	6	●	●
KBMXR0206-20T				0.20			●	●
KBMXR0311-05T	3	4.10	0.30	0.05	28.5	11	●	●
KBMXR0311-20T				0.20			●	●
KBMXR0411-05T	4.0	4.30	0.50	0.05	28.5	11	●	●
KBMXR0411-20T				0.20			●	●
KBMXR0420-05T	4	4.30	0.50	0.05	37.5	20	●	●
KBMXR0420-20T				0.20			●	●
KBMXR0511-05T	5.0	4.50	0.70	0.05	28.5	11	●	●
KBMXR0511-20T				0.20			●	●
KBMXR0520-05T	4.5	4.50	0.70	0.05	37.5	20	●	●
KBMXR0520-20T				0.20			●	●

订货示例：MB-07G150-00-10R　YL740　接受非标定制

● 为标准库存　○ 为非标准库存

KBMZ型（内径反向加工用）

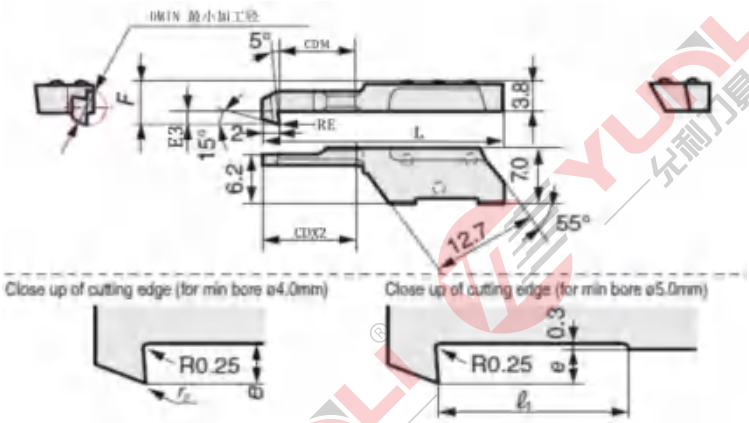

型号	最小加工直径	尺寸Dimensions(mm)						材质Grade	
		刀尖位置	偏置量	刀尖半径	全长	加工深度			
Ordering Code	DMIN	F	E3	RE	L	CDX	CDX2	YL10	YL930
KBMZR0411-05	4.0	5.10	1.3	0.05	28.5	9	11	○	○
KBMZR0411-20				0.20				○	○
KBMZR0511-05	5.0	5.10	1.3	0.05	28.5	9	11	○	○
KBMZR0511-20				0.20				○	○

KBMG（内径切槽加工用）

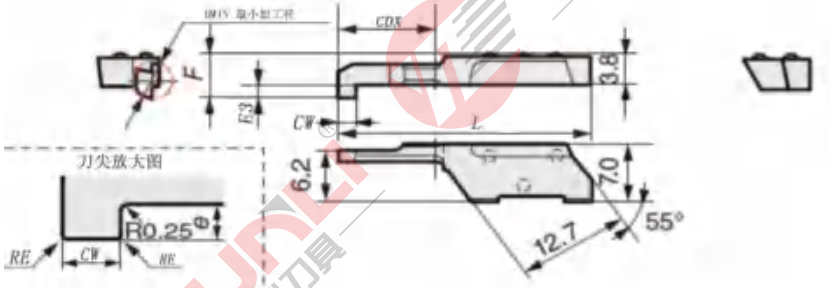

型号	最小加工直径	尺寸Dimensions(mm)						材质Grade	
		刀尖位置	偏置量	刃宽	刀尖半径	全长	加工深度		
Ordering Code	DMIN	F	E3	CW	RE	L	CDX	YL10	YL930
KBMGR0411-05	4.0	4.90	1.1	1.00	0.05	28.5	11	○	○
KBMGR0411-20				2.00	0.10			○	○
KBMGR0511-05	5.0	5.10	1.3	1.00	0.05	28.5	11	○	○
KGMGR0511-20				2.00	0.10			○	○

订货示例：MB-07G150-00-10R　YL740　　接受非标定制　　● 为标准库存　○ 为非标准库存

KBMFR型（端面切槽用）

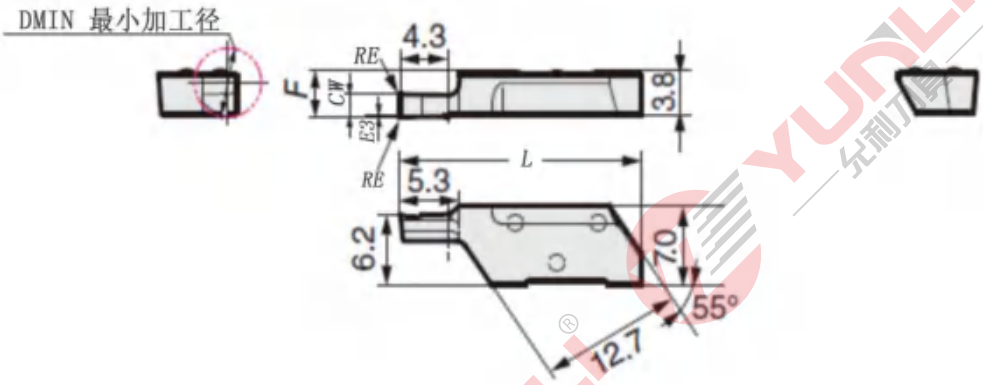

型号	最小加工直径	尺寸Dimensions(mm)						材质Grade	
		刀尖位置	偏置量	刃宽	刀尖半径	全长	最大槽深（mm）		
Ordering Code	DMIN	F	E3	CW	RE	L	CDX	YL10	YL930
KBMFR0615-05	6.0	4.0	0.2	1.5	0.05	21.8	4.0	●	●
KBMFR0620-05	6.0	4.0	0.2	2.0	0.05	21.8	4.0	●	●
KBMFR0630-05	6.0	4.0	0.2	3.0	0.05	21.8	4.0	●	●

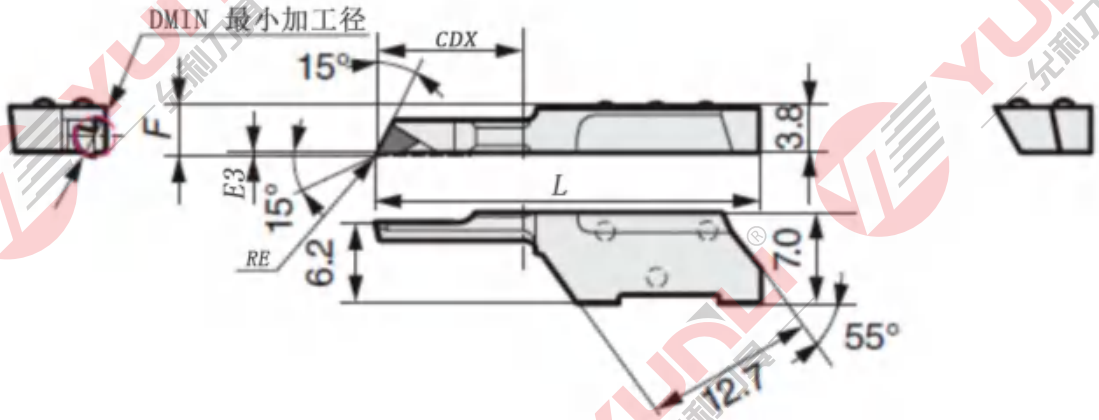

KBMX型（金刚石/内径加工用）

型号	最小加工直径	尺寸Dimensions(mm)						材质Grade	
		刀尖位置	偏置量	刀尖半径	全长	加工深度			
Ordering Code	DMIN	F	E3	RE	L	CDX		YL10	YL930
KBMXR0311-10	3.0	4.1	0.3	0.1	28.50	11		○	○
KBMXR0411-10	4.0	4.3	0.5	0.1	28.50	11		○	○
KBMXR0511-10	5.0	4.5	0.7	0.1	28.50	11		○	○

订货示例：MB-07G150-00-10R　YL740　　接受非标定制　　● 为标准库存　○ 为非标准库存

刀杆

型号	尺寸Dimensions(mm)					零件		
	直径	高度	全长	长度	刀尖距离	压板	双螺钉	扳手
Ordering Code	DCON	H	L1	LS	WF			
S10F-CKBR-16	10	9	80	58	5	CKBW16	WB4-8	LH020
S12F-CKBR-16	12	11	80	58	6			
S16H-CKBR-16	16	15	100	78	8			
S19K-CKBR-16	19.05	17	125	103	8			
S20K-CKBR-16	20	18	125	103	10			

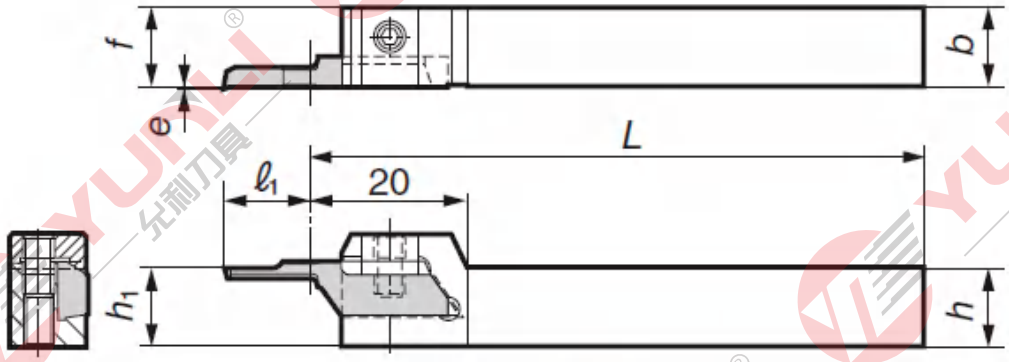

方形刀杆

Please refer to facing page E15 for e, ℓ_1 dimensions.

型号	尺寸Dimensions(mm)					零件		
	高度	宽度	全长	刀尖距离	中心高	压板	双螺钉	扳手
Ordering Code	H	B	L1	f	h			
CKBR1010-16	10	10	100	10	10	CKBW16	WB4-8	LH020
CKBR1212-16	12	12	125	12	12			
CKBR1616-16	16	16	125	16	16			
CKBR2020-16	20	20	125	20	20			
CKBR2525-16	20	25	150	25	25			

刀杆 偏置量小

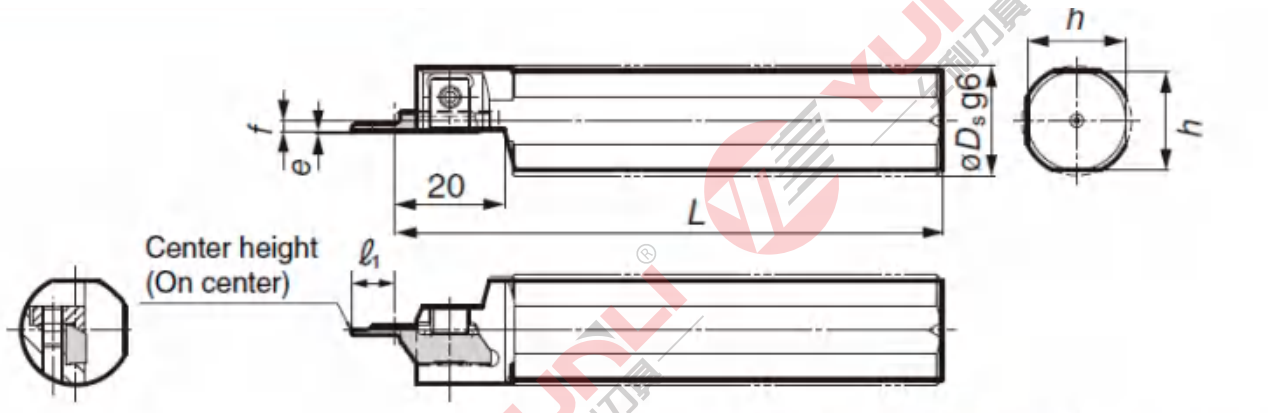

Please refer to facing page E15 for e, ℓ_1 dimensions.

型号	尺寸Dimensions(mm)					零件		
	直径	高度	全长	刀尖距离		压板	双螺钉	扳手
Ordering Code	Ds	H	L	f				
S1905H-CKBRS-16	19.05	17	100	2		CKBW16	WB4-8	LH020
S20H-CKBRS-16	20	18	100	2				
S22K-CKBRS-16	22	19	125	2				
S25K-CKBRS-16	25	23	125	2				
S254K-CKBRS-16	25.4	23	125	2				

CKB型-超小孔L型

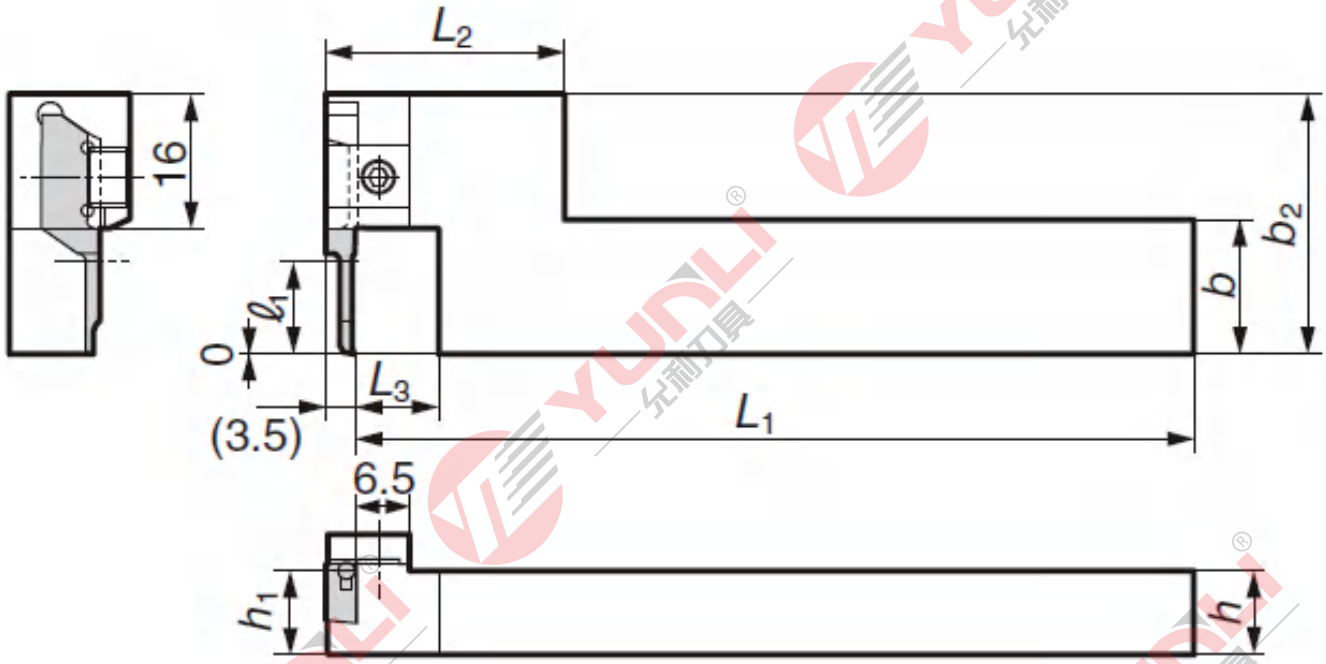

型号	尺寸Dimensions(mm)							适用刀片型号	零件		
	高度	宽度	全长	加工深度	宽度	头部			压板	双螺钉	扳手
Ordering Code	H-h1	B	L1	l1	B2	L2	L3				
CKBSR1016-16-06	10	16	125	6	26	28.5	10	KBMXL0206-OOR	CKBW16	WB4-8	LH020
CKBSR1016-16-11	10	16	125	11	31	28.5	10	KBMXL03,04,0511-OOR			
CKBSR1216-16-06	12	16	150	6	26	28.5	10	KBMXL0206-OOR			
CKBSR1216-16-11	12	16	150	11	31	28.5	10	KBMXL03,04,0511-OOR			
CKBSR1216-16-20	12	16	150	20	40	28.5	10	KBMXL04,0520-OOR			
CKBSR1616-16-06	16	16	150	6	26	34.5	16	KBMXL0206-OOR			
CKBSR1616-16-11	16	16	150	11	31	34.5	16	KBMXL03,04,0511-OOR			
CKBSR1616-16-20	16	16	150	20	40	34.5	16	KBMXL04,0520-OOR			

S-SVN-XN (圆形刀杆・标准型)

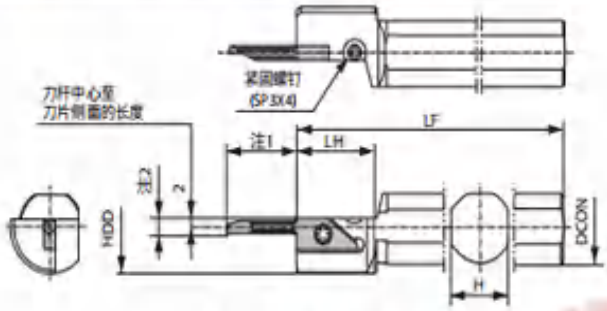

Fig. 1 (S-SVN-XN)

• 本图为右手(R)

S-SVN-SXN (圆形刀杆・直柄型)

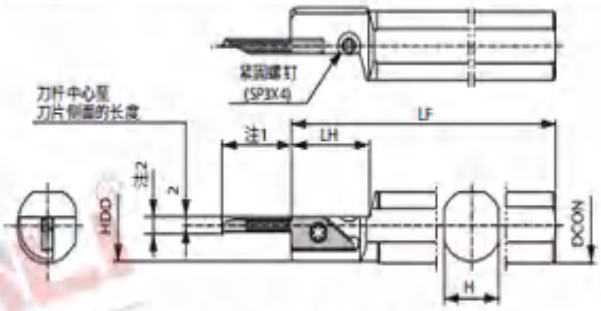

Fig. 2 (S-SVN-SXN)

右手(R)刀杆适用右手(R)刀片。

刀杆尺寸

型 号	尺 寸(mm)								形状	零 件			适用刀片
	DCON	HDD	H	LF	LH					紧固螺钉	扳手	紧固螺钉	
S12F -SVNR12XN	12	20	11	80	23				Fig. 1	SB-3080TR	FT-10	SP3X4	VNBXR...
S14G -SVNR12XN	14		13	90									
S16H -SVNR12XN	16	24	15	100									
S19H -SVNR12XN	19.05		17		24								
S19N -SVNR12XN				160									
S20H -SVNR12XN	20		18	100									
S25H -SVNR12XN	25.4	30	23										
S25Q -SVNR12XN				180									
S19H -SVNR12SXN	19.05	18.5	17	100	23				Fig. 2	SB-3080TR	FT-10	SP3X4	VNBXR...
S20H -SVNR12SXN	20	19.5	18										
S22K -SVNR12SXN	22	21.5	20	125									
S25.0G -SVNR12SXN	25	24.5	23	90									

TT32牙刀 TT43

形状		型号		适用	螺距		尺寸(mm)			角度(°)	材质		
有方向的刀片图示为右手方向（R）				螺纹	mm	牙/英寸	r ε	S		θ	YL10	YL930	YL740
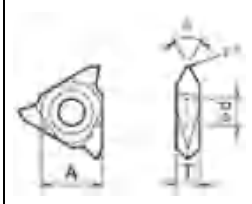		TT32R/L	6000	M UN	0.5～2.5	56～10	0.0	-	-	60°	●	●	○
			6001	M UN	1.0～2.5	24～10	0.1				●	●	○
			6002	M UN	1.5～2.5	16～10	0.2				●	●	○
			6003	M UN	2.5	11～10	0.3				●	●	○
		TT32R/L	5501	G,PT W	-	28～11 24～10	0.1	-	-	55°	●	●	○
			5502	G,PT W	-	14～11 14～10	0.2				●	●	○
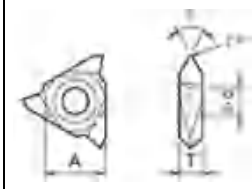		TT43R/L	6001	M UN	1.5～3.5	24～8	0.1	-	-	60°	●	●	○
			6002	M UN	1.5～3.2	16～8	0.2				●	●	○
			6003	M UN	2.5～3.5	11～8	0.3				●	●	○
			6004	M UN	3.0～3.5	8	0.4				●	●	○
		TT43R/L	5501	G,PT W	-	28～11 24～7	0.1	-	-	55°	●	●	○
			5502	G,PT W	-	14～11 16～7	0.2				●	●	○
			5503	G,PT W	-	11 10～7	0.3				●	●	○
			5504	G,PT W	-	8～7	0.4				●	●	○

TTX32牙刀

形状		型号		适用	螺距		尺寸(mm)			角度(°)	材质		
有方向的刀片图示为右手方向（R）				螺纹	mm	牙/英寸	r ε	S1	S2	θ	YL10	YL930	YL740
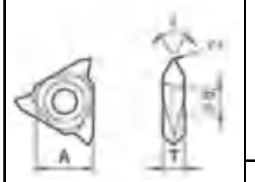		TTX32R/L	6000	M UN	0.5～1.0	56～32	0.00	0.6	1.12	60°	●	●	○
			60005	M UN	0.5～1.0	48～32	0.05	0.6	1.12		●	●	○
			6001	M UN	1.0～2.0	28～14	0.10	1.1	1.62		●	●	○
			6000S	M UN	0.5	56～48	0.00	0.3	1.12	60°	●	●	○
			60005S	M UN	0.5	48	0.05	0.3	1.12		●	●	○
			5501	G,R W	-	28～19 24～20	0.10	0.75	1.01	55°	●	●	○
			55015	G,R W	-	19～11 20～11	0.15	1.20	1.46		●	●	○

KTT型

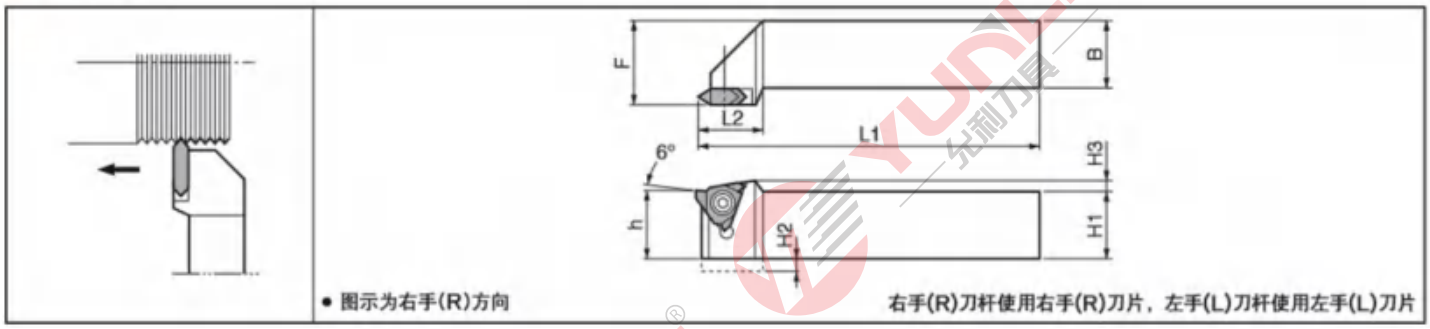

型号			尺寸(mm)							零件				库存	
										紧固螺钉		扳手			
			H1=h	H2	H3	B	L1	L2	F					R	L
	KTTR/L	1010F-16	10	4	2.5	10	80	18	12	SB-4070TRS	-	FT-10	-	●	●
		1212H-16	12	2		12	100		16					●	●
		1616H-16	16	-		16	100		20					●	●
		2020K-16	20			20	125		25	SB-4TR	-	FT-15	-	●	●
		2525M-16	25			25	150		30					●	●
	KTTR/L	2020K-22	20	-	3.0	20	125	25	25	-	GS-50	-	LW-3	●	●
		2525M-22	25			25	150		30					●	●

KTTX型

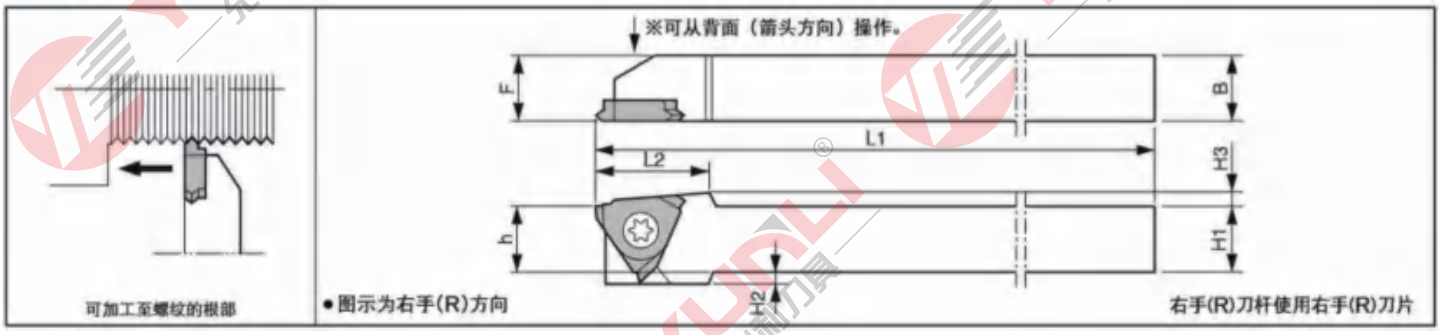

形状	型号		尺寸(mm)							零件		库存
										紧固螺钉	扳手	
			H1=h	H2	H3	B	L1	L2	F			
	KTTXR	1010JX-16F	10	2	2.5	10	120	17.6	10	SB-4070TRW	FT-8	●
		1212JX-16F	12	-		12	120		12			●
		1616JX-16F	16			16	120		16			●
		1212F-16F	12	-	2.5	12	80	17.6	12	SB-4070TRW	FT-8	●
		2020K-16F	20			20	125		20			●

S…KTTX型 （一般外圆车削用套筒刀杆）

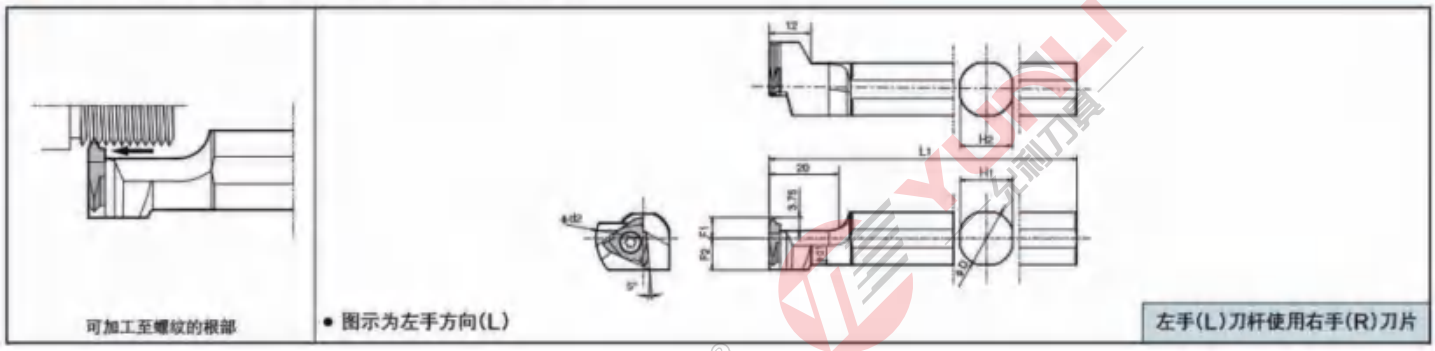

形状	型号	尺寸(mm)							零件		库存
									紧固螺钉	扳手	
		ΦD	L1	F1	F2	Φd1	Φd2	H1=H2			
	S12F-KTTXL16	12	80	6.0	9.0	11.0	27	11	SB-4070TRW	FT-8	●
	S14H-KTTXL16	14	100	6.0	9.0	13.0	27	13			●
	S15F-KTTXL16	15.875	85	6.0	9.0	14.6	27	15			●
	S16F-KTTXL16	16	85	6.0	9.0	14.6	27	15	SB-4070TRW	FT-8	●
	S19G-KTTXL16	19.05	90	6.0	10.5	17.6	27	17			●
	S19K-KTTXL16	19.05	120	6.0	10.5	17.6	27	17	SB-4070TRW	FT-8	●
	S20G-KTTXL16	20	90	6.0	11.0	18.6	27	18			●
	S20K-KTTXL16	20	120	6.0	11.0	18.6	27	18			●
	S25H-KTTXL16	25	100	10.0	14.0	23.6	32	23	SB-4070TRW	FT-8	●
	S25K-KTTXL16	25.4	120	10.0	14.0	23.6	32	23			●

◇ MTTR牙刀

型号		公制螺纹 螺距mm	尺寸(mm)			材质		
			D1	S1	Re	YL10	YL930	YL740
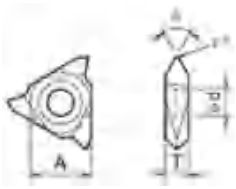 	MTTR436000	-0.8	12.7	4.76	0.0	●	●	○
	L436000	-0.8			0.0	●	●	○
	R436001	1.0-1.75			0.1	●	●	○
	L436001	1.0-1.75			0.1	●	●	○
	R436002	2.0-2.5			0.2	●	●	○
	L436002	2.0-2.5			0.2	●	●	○
	R436003	3.0-3.5			0.3	●	●	○
	L436003	3.0-3.5			0.3	●	●	○
	R436004	4.0-4.5			0.4	●	●	○
	L436004	4.0-4.5			0.4	●	●	○
	MTTR4355001	(28-10)	12.7	4.76	0.1	●	●	○
	L435501	(28-10)			0.1	●	●	○
	R435502	(16-8)			0.2	●	●	○
	L435502	(16-8)			0.2	●	●	○
	R435503	(11-8)			0.3	●	●	○
	L435503	(11-8)			0.3	●	●	○

MTH 外螺纹切削用

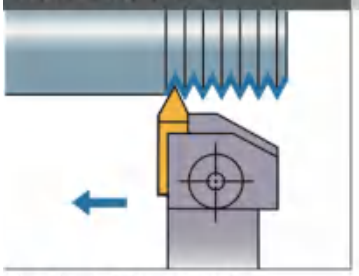

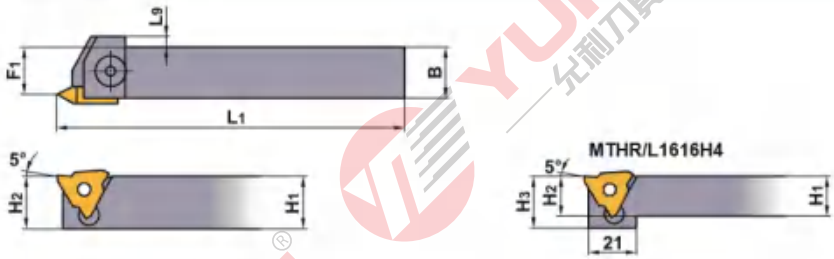

注：切削方向不能与箭头所示方向相反。

本图所示为右手刀(R)。

型号		适用刀片	尺寸（mm）							压板	夹紧螺钉	弹簧	扳手	库存	
			H1	B	L1	H2	H3	F1	L9					R	L
	MTHR/L1616H4	MTTR/L43_ _ _	16	16	100	16	19	13.8	3	MTK1R/L	HBH0620	MES3	HKY40R	●	●
	2020K4		20	20	125	20	-	17.8	-					●	●
	2525M4		25	25	150	25	-	22.8	-					●	●

MT1 外螺纹切削用

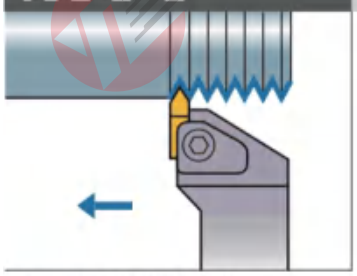

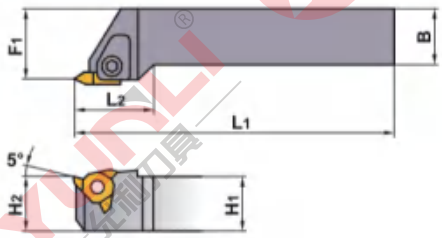

注：切削方向不能与箭头所示方向相反。

本图所示为右手刀(R)。

型号		适用刀片	尺寸（mm）					压板	夹紧螺钉	弹簧	扳手	库存	
			H1	B	L1	L2	F1					R	L
	MT1R/L2020K4	MTTR/L43_ _ _	20	20	125	30	25	MTK1R/L	HBH0620	MES3	HKY40R	●	●
	2525M4		25	25	150	30	32					●	●
	3232P4		32	32	170	30	40					●	●

型号		尺寸(mm)				库存		
		θ	Ød	T	r ε	YL10	YL930	YL740
	JTTR/L3005F-55	55 °	9.525	3.18	0.05	●	○	●
	JTTR/L3005F	60 °				●	○	●
	JTTR/L3010F				0.1	●	○	●

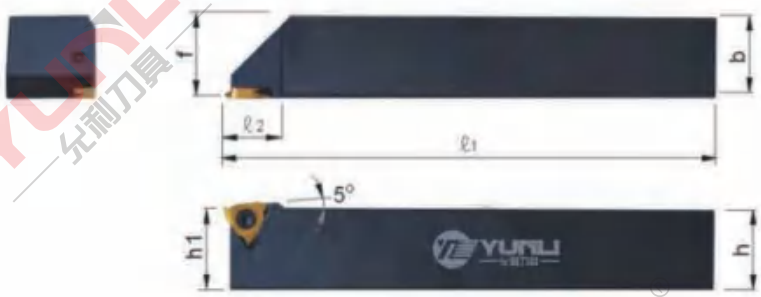

型号		使用刀片	尺寸(mm)							紧固螺钉	扳手		库存	
			h	b	L1	L2	h1	f	C				R	L
	JSTTR/L1010K3		10	10	125	16.5	10	9.5	2	CSTB-4SD	T-8F	(T-8L)	●	●
	JSTTR/L1212K3	JTTR/L3_ _ _	12	12	125	16.5	12	11.5	–				●	●
	JSTTR/L1616K3		16	16	125	16.5	16	15.5					●	●
	JSTTR/L2020K3		20	20	125	16.5	20	20		CSTB-4	T-15F	T-15	●	●
	JSTTR/L2525K3		25	25	125	16.5	25	25					●	●

型号		使用刀片	尺寸(mm)							紧固螺钉	扳手	库存	
			ØDS	f	L1	L2	h	B	C			R	L
	JS19K-TTL3	JTTR30_ _F	19.05	10	125	–	18	11.5	–	CSTB-4S	T-15F	●	●
	JS20K-TTL3		20		125		19					●	●
	JS22K-TTL3		22		125		21					●	●
	JS25K-TTL3		25.4		126		24	12.7				●	●

YUNLI 允利刀具

通用型公制螺纹刀片(泛螺距)

外螺纹				内螺纹				材质及用途 Grade		
全磨制型号 Type	压制型号 Type	适用螺距 Pitch mm	适用螺距 Pitch TPI	全磨制型号 Type	压制型号 Type	适用螺距 Pitch mm	适用螺距 Pitch TPI	YL10	YL930	YL740
				06IR/L A60		0.5-1.25	48-20	加工 铸铁 铝合金 有色金属	加工 钢 不锈钢 高硬钢 HRC < 55°	加工 钢 不锈钢 铸造不锈钢 高硬钢 HRC < 55°
				08IR/L A60		0.5-1.5	48-16			
11ER/L A60		0.5-1.5	48-16	11IR/L A60	11IRM A60	0.5-1.5	48-16			
				11IR/L AG60	11IRM AG60	1.0-2.5	26-9			
16ER/L A60	16ERM A60	0.5-1.5	48-16	16IR/L A60	16IRM A60	0.5-1.5	48-16			
16ER/L AG60	16ERM AG60	1.0-3.0	26-8	16IR/L AG60	16IRM AG60	1.0-3.0	26-8			
16ER/L G60	16ERM G60	1.75-3.0	14-8	16IR/L G60	16IRM G60	1.75-3.0	14-8			
22ER/L N60	22ERM N60	3.5-5.0	7-5	22IR/L N60	22IRM N60	3.5-5.0	7-5			
27ER/L Q60	27ERM Q60	5.5-6.0	4.5-4	27IR/L Q60	27IRM Q60	5.5-6.0	4.5-4			

●用于所有机械加工的一般用途螺纹

通用型英制螺纹刀片(泛螺距)

外螺纹				内螺纹				材质及用途 Grade		
全磨制型号 Type	压制型号 Type	适用螺距 Pitch mm	适用螺距 Pitch TPI	全磨制型号 Type	压制型号 Type	适用螺距 Pitch mm	适用螺距 Pitch TPI	YL10	YL930	YL740
				06IR/L A55		0.5-1.25	48-20	加工 铸铁 铝合金 有色金属	加工 钢 不锈钢 高硬钢 HRC < 55°	加工 钢 不锈钢 铸造不锈钢 高硬钢 HRC < 55°
				08IR/L A55		0.5-1.5	48-16			
11ER/L A55		0.5-1.5	48-16	11IR/L A55	11IRM A55	0.5-1.5	48-16			
				11IR/L AG55	11IRM AG55	1.0-2.5	26-9			
16ER/L A55	16ERM A55	0.5-1.5	48-16	16IR/L A55	16IRM A55	0.5-1.5	48-16			
16ER/L AG55	16ERM AG55	1.0-3.0	26-8	16IR/L AG55	16IRM AG55	1.0-3.0	26-8			
16ER/L G55	16ERM G55	1.75-3.0	14-8	16IR/L G55	16IRM G55	1.75-3.0	14-8			
22ER/L N55	22ERM N55	3.5-5.0	7-5	22IR/L N55	22IRM N55	3.5-5.0	7-5			
27ER/L Q55	27ERM Q55	5.5-6.0	4.5-4	27IR/L Q55	27IRM Q55	5.5-6.0	4.5-4			

●用于所有机械加工的一般用途螺纹

通用型公英制立式螺纹刀片(外螺纹)

外螺纹				材质及用途 Grade		
型号 Type		适用螺距 Pitch mm	适用螺距 Pitch TPI	YL10	YL930	YL740
16VER/L A60	16VER A55	0.5-1.5	48-16	加工 铸铁 铝合金 有色金属	加工 钢 不锈钢 高硬钢 HRC < 55°	加工 钢 不锈钢 铸造不锈钢 高硬钢 HRC < 55°
16VER/L AG60	16VER AG55	1.0-3.0	26-8			
16VER/L G60	16VER G55	1.75-3.0	14-8			
22VER/L N60	22VER N55	3.5-5.0	7-5			

●用于所有机械加工的一般用途螺纹

YUNLI 允利刀具

ISO公制螺纹刀片




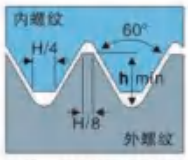

标准：MR262/(DIN13)
公差等级：6g/6H

外螺纹				内螺纹				材质及用途 Grade		
全磨制型号 Type	压制型号 Type	适用螺距 Pitch mm	适用螺距 Pitch 齿深	全磨制型号 Type	压制型号 Type	适用螺距 Pitch mm	适用螺距 Pitch 齿深	YL10	YL930	YL740
				06IR/L 050ISO		0.50	0.29	加工 铸铁 铝合金 有色金属	加工 钢 不锈钢 高硬钢 HRC < 55°	加工 钢 不锈钢 铸造不锈钢 高硬钢 HRC < 55°
				06IR/L 075ISO		0.75	0.43			
				06IR/L 100ISO		1.00	0.58			
				06IR/L 125ISO		1.25	0.72			
				08IR/L 050ISO		0.50	0.29			
				08IR/L 075ISO		0.75	0.43			
				08IR/L 100ISO		1.00	0.58			
				08IR/L 125ISO		1.25	0.72			
				08IR/L 150ISO		1.50	0.87			
				08IR/L 175ISO		1.75	1.01			
11ER/L 050ISO	11ERM 050ISO	0.50	0.31	11IR/L 050ISO	11IRM 050ISO	0.50	0.29			
11ER/L 075ISO	11ERM 075ISO	0.75	0.46	11IR/L 075ISO	11IRM 075ISO	0.75	0.43			
11ER/L 080ISO	11ERM 080ISO	0.80	0.49	11IR/L 080ISO	11IRM 080ISO	0.80	0.46			
11ER/L 100ISO	11ERM 100ISO	1.00	0.61	11IR/L 100ISO	11IRM 100ISO	1.00	0.58			
11ER/L 125ISO	11ERM 125ISO	1.25	0.77	11IR/L 125ISO	11IRM 125ISO	1.25	0.72			
11ER/L 150ISO	11ERM 150ISO	1.50	0.92	11IR/L 150ISO	11IRM 150ISO	1.50	0.87			
11ER/L 175ISO	11ERM 175ISO	1.75	1.07	11IR/L 175ISO	11IRM 175ISO	1.75	1.01			
11ER/L 200ISO	11ERM 200ISO	2.00	1.23	11IR/L 200ISO	11IRM 200ISO	2.00	1.15			
16ER/L 050ISO	16ERM 050ISO	0.50	0.31	16IR/L 050ISO	16IRM 050ISO	0.50	0.29			
16ER/L 075ISO	16ERM 075ISO	0.75	0.46	16IR/L 075ISO	16IRM 075ISO	0.75	0.43			
16ER/L 080ISO	16ERM 080ISO	0.80	0.49	16IR/L 080ISO	16IRM 080ISO	0.80	0.46			
16ER/L 100ISO	16ERM 100ISO	1.00	0.61	16IR/L 100ISO	16IRM 100ISO	1.00	0.58			
16ER/L 125ISO	16ERM 125ISO	1.25	0.77	16IR/L 125ISO	16IRM 125ISO	1.25	0.72			
16ER/L 150ISO	16ERM 150ISO	1.50	0.92	16IR/L 150ISO	16IRM 150ISO	1.50	0.87			
16ER/L 175ISO	16ERM 175ISO	1.75	1.07	16IR/L 175ISO	16IRM 175ISO	1.75	1.01			
16ER/L 200ISO	16ERM 200ISO	2.00	1.23	16IR/L 200ISO	16IRM 200ISO	2.00	1.15			
16ER/L 250ISO	16ERM 250ISO	2.50	1.53	16IR/L 250ISO	16IRM 250ISO	2.50	1.44			
16ER/L 300ISO	16ERM 300ISO	3.00	1.84	16IR/L 300ISO	16IRM 300ISO	3.00	1.73			
16ER/L 350ISO	16ERM 350ISO	3.50	2.15	16IR/L 350ISO	16IRM 350ISO	3.50	2.02			
22ER/L 350ISO		3.50	2.15	22IR/L 350ISO		3.50	2.02			
22ER/L 400ISO	22ERM 400ISO	4.00	2.45	22IR/L 400ISO	22IRM 400ISO	4.00	2.31			
22ER/L 450ISO	22ERM 450ISO	4.50	2.76	22IR/L 450ISO	22IRM 450ISO	4.50	2.60			
22ER/L 500ISO	22ERM 500ISO	5.00	3.07	22IR/L 500ISO	22IRM 500ISO	5.00	2.89			
27ER/L 550ISO		5.50	3.37	27IR/L 550ISO		5.50	3.17			
27ER/L 600ISO		6.00	3.68	27IR/L 600ISO		6.00	3.46			

●用于所有机械加工的一般用途螺纹

英制螺纹刀片
BSW,BSP,BSF

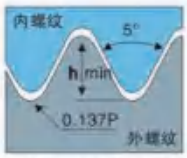

标准：B.S.84:1956
DIN259,ISO228/1:1982
公差等级：中级A

外螺纹				内螺纹				材质及用途 Grade		
全牙制型号 Type	压制型号 Type	适用螺距 Pitch		全牙制型号 Type	压制型号 Type	适用螺距 Pitch		YL10	YL930	YL740
		mm	齿深			mm	齿深			
				06IR/L 28W		28	0.58	加工 铸铁 铝合金 有色金属	加工 钢 不锈钢 高硬钢 HRC＜55°	加工 钢 不锈钢 铸造不锈钢 高硬钢 HRC＜55°
				06IR/L 24W		24	0.68			
				06IR/L 20W		20	0.81			
				06IR/L 19W		19	0.90			
				08IR/L 28W		28	0.58			
				08IR/L 24W		24	0.68			
				08IR/L 20W		20	0.81			
				08IR/L 19W		119	0.90			
				08IR/L 16W		16	1.02			
11ER/L 28W	11ERM 28W	28	0.58	11IR/L 28W	11IRM 28W	28	0.58			
11ER/L 24W	11ERM 24W	24	0.68	11IR/L 24W	11IRM 24W	24	0.68			
11ER/L 20W	11ERM 20W	20	0.81	11IR/L 20W	11IRM 20W	20	0.81			
11ER/L 19W	11ERM 19W	19	0.90	11IR/L 19W	11IRM 19W	19	0.90			
11ER/L 16W	11ERM 16W	16	1.02	11IR/L 16W	11IRM 16W	16	1.02			
11ER/L 14W	11ERM 14W	14	1.16	11IR/L 14W	11IRM 14W	14	1.16			
11ER/L 11W	11ERM 11W	11	1.48	11IR/L 11W	11IRM 11W	11	1.48			
16ER/L 48W	16ERM 48W	48	0.34	16IR/L 48W	16IRM 48W	48	0.34			
16ER/L 40W	16ERM 40W	40	0.41	16IR/L 40W	16IRM 40W	40	0.41			
16ER/L 32W	16ERM 32W	32	0.51	16IR/L 32W	16IRM 32W	32	0.51			
16ER/L 28W	16ERM 28W	28	0.58	16IR/L 28W	16IRM 28W	28	0.58			
16ER/L 26W	16ERM 26W	26	0.63	16IR/L 26W	16IRM 26W	26	0.63			
16ER/L 24W	16ERM 24W	24	0.68	16IR/L 24W	16IRM 24W	24	0.68			
16ER/L 20W	16ERM 20W	20	0.81	16IR/L 20W	16IRM 20W	20	0.81			
16ER/L 19W	16ERM 19W	19	0.86	16IR/L 19W	16IRM 19W	19	0.86			
16ER/L 18W	16ERM 18W	18	0.90	16IR/L 18W	16IRM 18W	18	0.90			
16ER/L 16W	16ERML 16W	16	1.02	16IR/L 16W	16IRM 16W	16	1.02			
16ER/L 14W	16ERM 14W	14	1.16	16IR/L 14W	16IRM 14W	14	1.16			
16ER/L 12W	16ERM 12W	12	1.36	16IR/L 12W	16IRM 12W	12	1.36			
16ER/L 11W	16ERM 11W	11	1.48	16IR/L 11W	16IRM 11W	11	1.48			
16ER/L 10W	16ERM 10W	10	1.63	16IR/L 10W	16IRM 10W	10	1.63			
16ER/L 9W	16ERM 9W	9	1.81	16IR/L 9W	16IRM 9W	9	1.81			
16ER/L 8W	16ERM 8W	8	2.03	16IR/L 8W	16IRM 8W	8	2.03			
22ER/L 7W	22ERM 7W	7	2.41	22IR/L 7W	22IRM 7W	7	2.41			
22ER/L 6W	22ERM 6W	6	2.71	22IR/L 6W	22IRM 6W	6	2.71			
22ER/L 5W	22ERM 5W	5	3.25	22IR/L 5W	22IRM 5W	5	3.25			
27ER/L 4.5W		4.5	3.61	27IR/L 4.5W		4.5	3.61			
27ER/L 4W		4	4.07	27IR/L 4W		4	4.07			

●用于所有机械加工的一般用途螺纹

YUNLI 允利刀具

UN美制螺纹刀片
UN,UNC UNF,UNEF

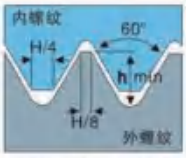

标准：ANSIB 1.1:74
公差等级：2A/2B

外螺纹				内螺纹				材质及用途 Grade		
全磨制型号 Type	压铜型号 Type	适用螺距 Pitch mm	适用螺距 Pitch 齿深	全磨制型号 Type	压铜型号 Type	适用螺距 Pitch mm	适用螺距 Pitch 齿深	YL10	YL930	YL740
				06IR/L 28UN		28	0.52	加工 铸铁 铝合金 有色金属	加工 钢 不锈钢 高硬钢 HRC < 55°	加工 钢 不锈钢 铸造不锈钢 高硬钢 HRC < 55°
				06IR/L 24UN		24	0.61			
				06IR/L 20UN		20	0.73			
				06IR/L 18UN		18	0.81			
				08IR/L 28UN		28	0.52			
				08IR/L 24UN		24	0.61			
				08IR/L 20UN		20	0.73			
				08IR/L 18UN		18	0.81			
				08IR/L 16UN		16	0.92			
11ER/L 28UN	11ERM 28UN	28	0.56	11IR/L 28UN	11IRM 28UN	28	0.52			
11ER/L 24UN	11ERM 24UN	24	0.65	11IR/L 24UN	11IRM 24UN	24	0.61			
11ER/L 20UN	11ERM 20UN	20	0.78	11IR/L 20UN	11IRM 20UN	20	0.73			
11ER/L 18UN	11ERM 18UN	18	0.87	11IR/L 18UN	11IRM 18UN	18	0.81			
11ER/L 16UN	11ERM 16UN	16	0.97	11IR/L 16UN	11IRM 16UN	16	0.92			
11ER/L 14UN	11ERM 14UN	14	1.11	11IR/L 14UN	11IRM 14UN	14	1.05			
11ER/L 12UN	11ERM 12UN	12	1.30	11IR/L 12UN	11IRM 12UN	12	1.22			
16ER/L 48UN	16ERM 48UN	48	0.32	16IR/L 48UN	16IRM 48UN	48	0.31			
16ER/L 40UN	16ERM 40UN	40	0.39	16IR/L 40UN	16IRM 40UN	40	0.37			
16ER/L 32UN	16ERM 32UN	32	0.49	16IR/L 32UN	16IRM 32UN	32	0.46			
16ER/L 28UN	16ERM 28UN	28	0.56	16IR/L 28UN	16IRM 28UN	28	0.52			
16ER/L 24UN	16ERM 24UN	24	0.65	16IR/L 24UN	16IRM 24UN	24	0.61			
16ER/L 20UN	16ERM 20UN	20	0.78	16IR/L 20UN	16IRM 20UN	20	0.73			
16ER/L 18UN	16ERM 18UN	18	0.87	16IR/L 18UN	16IRM 18UN	18	0.81			
16ER/L 16UN	16ERM 16UN	16	0.97	16IR/L 16UN	16IRM 16UN	16	0.92			
16ER/L 14UN	16ERM 14UN	14	1.11	16IR/L 14UN	16IRM 14UN	14	1.05			
16ER/L 12UN	16ERM 12UN	12	1.30	16IR/L 12UN	16IRM 12UN	12	1.22			
16ER/L 11UN	16ERM 11UN	11	1.42	16IR/L 11UN	16IRM 11UN	11	1.28			
16ER/L 10UN	16ERM 10UN	10	1.56	16IR/L 10UN	16IRM 10UN	10	1.47			
16ER/L 9UN	16ERM 9UN	9	1.73	16IR/L 9UN	16IRM 9UN	9	1.63			
16ER/L 8UN	16ERM 8UN	8	1.95	16IR/L 8UN	16IRM 8UN	8	1.83			
22ER/L 7UN	22ERM 7UN	7	2.22	22IR/L 7UN	22IRM 7UN	7	2.09			
22ER/L 6UN	22ERM 6UN	6	2.60	22IR/L 6UN	22IRM 6UN	6	2.44			
22ER/L 5UN	22ERM 5UN	5	3.12	22IR/L 5UN	22IRM 5UN	5	2.93			
27ER/L 4.5UN			3.46	27IR/L 4.5UN		4.5	3.26			
27ER/L 4UN			3.89	27IR/L 4UN		4	3.67			

●用于所有机械加工的一般用途螺纹

ISO标准型螺纹刀片

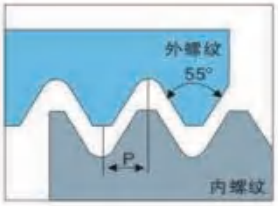

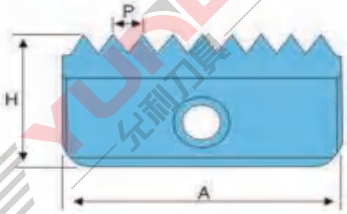

H		6.3	7.5	12	16	20
T		2.9	3.1	4.7	5.5	6.3
加工螺距 Pitch		尺寸 Dimensions(mm)=A				
mm		12	14	21	30	40
0.5	外Ext.					
0.5	内Int.	*12 I 0.5 ISO	14 I 0.5 ISO			
0.75	外Ext.		14 E 0.75 ISO			
0.75	内Int.	*12 I 0.75 ISO	14 I 0.75 ISO			
1.0	外Ext.		14 E 1.0 ISO	21 E 1.0 ISO		
1.0	内Int.	*12 I 1.0 ISO	14 I 1.0 ISO	21 I 1.0 ISO		
1.25	外Ext.		14 E 1.25 ISO			
1.25	内Int.	*12 I 1.25 ISO	14 I 1.25 ISO			
1.5	外Ext.		14 E 1.5 ISO	21 E 1.5 ISO	30 E 1.5 ISO	40 E 1.5 ISO
1.5	内Int.	*12 I 1.5 ISO	14 I 1.5 ISO	21 I 1.5 ISO	30 I 1.5 ISO	40 I 1.5 ISO
1.75	外Ext.		14 E 1.75 ISO			
1.75	内Int.		14 I 1.75 ISO	21 I 1.75 ISO		
2.0	外Ext.		14 E 2.0 ISO	21 E 2.0 ISO	30 E 2.0 ISO	40 E 2.0 ISO
2.0	内Int.		14 I 2.0 ISO	21 I 2.0 ISO	30 I 2.0 ISO	40 I 2.0 ISO
2.5	外Ext.		14 E 2.5 ISO	21 E 2.5 ISO		
2.5	内Int.		14 I 2.5 ISO	21 I 2.5 ISO		
3.0	外Ext.			21 E 3.0 ISO	30 E 3.0 ISO	40 E 3.0 ISO
3.0	内Int.			21 I 3.0 ISO	30 I 3.0 ISO	40 I 3.0 ISO
3.5	外Ext.				30 E 3.5 ISO	
3.5	内Int.			21 I 3.5 ISO	30 I 3.5 ISO	40 I 3.5 ISO
4.0	外Ext.				30 E 4.0 ISO	40 E 4.0 ISO
4.0	内Int.				30 I 4.0 ISO	40 I 4.0 ISO
4.5	外Ext.					
4.5	内Int.				30 I 4.5 ISO	40 I 4.5 ISO
5.0	外Ext.					40 E 5.0 ISO
5.0	内Int.				30 I 5.0 ISO	40 I 5.0 ISO
5.5	外Ext.					
5.5	内Int.					40 I 5.5 ISO
6.0	外Ext.					40 E 6.0 ISO
6.0	内Int.					

订货示例：14 E 2.5 ISO BR215　10片

UN-60° 美国统一标准型螺纹刀片
UN,UNC,UNF,UNEF,UNS

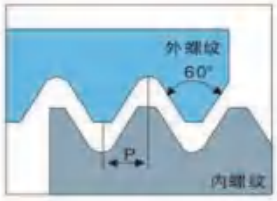

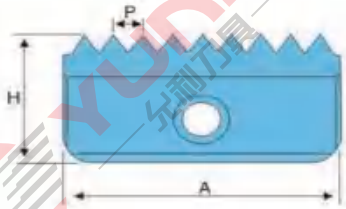

H		6.3	7.5	12	16	20
T		2.9	3.1	4.7	5.5	6.3
加工螺距 Pitch		尺寸 Dimensions(mm)=A				
tpi		12	14	21	30	40
32	外Ext.		14 E 32 UN			
32	内Int.	*12 I 32 UN	14 I 32 UN			
28	外Ext.		14 E 28 UN			
28	内Int.	*12 I 28 UN	14 I 28 UN			
27	外Ext.					
27	内Int.		14 I 27 UN			
24	外Ext.		14 E 24 UN	21 E 24 UN		
24	内Int.	*12 I 24 UN	14 I 24 UN	21 I 24 UN		
20	外Ext.		14 E 20 UN	21 E 20 UN	30 E 20 UN	
20	内Int.	*12 I 20 UN	14 I 20 UN	21 I 20 UN	30 I 20 UN	
18	外Ext.		14 E 18 UN	21 E 18 UN	30 E 18 UN	
18	内Int.	*12 I 18 UN	14 I 18 UN	21 I 18 UN	30 I 18 UN	
16	外Ext.		14 E 16 UN	21 E 16 UN	30 E 16 UN	40 E 16 UN
16	内Int.	*12 I 16 UN	14 I 16 UN	21 I 16 UN	30 I 16 UN	40 I 16 UN
14	外Ext.		14 E 14 UN	21 E 14 UN	30 E 14 UN	40 E 14 UN
14	内Int.		14 I 14 UN	21 I 14 UN	30 I 14 UN	40 I 14 UN
12	外Ext.		14 E 12 UN	21 E 12 UN	30 E 12 UN	40 E 12 UN
12	内Int.		14 I 12 UN	21 I 12 UN	30 I 12 UN	40 I 12 UN
11	外Ext.					
11	内Int.		14 I 11 UN			
10	外Ext.			21 E 10 UN	30 E 10 UN	40 E 10 UN
10	内Int.		14 I 10 UN	21 I 10 UN	30 I 10 UN	40 I 10 UN
8	外Ext.				30 E 8 UN	40 E 8 UN
8	内Int.			21 I 8 UN	30 I 8 UN	40 I 8 UN
7	外Ext.					
7	内Int.			21 I 7 UN		
6	外Ext.				30 E 6 UN	40 E 6 UN
6	内Int.				30 I 6 UN	40 I 6 UN
5	外Ext.					
5	内Int.				30 I 5 UN	
4.5	外Ext.					
4.5	内Int.					40 I 4.5 UN
4	外Ext.					
4	内Int.					40 I 4 UN

订货示例：14 E 10 UN BR215 10片

W-55° 英国惠氏螺纹刀片

H	6.3	7.5	12	16	20
T	2.9	3.1	4.7	5.5	6.3
加工螺距	尺寸 Dimensions(mm)=A				
tpi	12	14	21	30	40
24		14-24 W			
20		14-20 W	21-20 W		
19	*12-19 W	14-19 W	21-19 W		
16		14-16 W	21-16 W	30-16 W	
14		14-14 W	21-14 W	30-14 W	
11		14-11 W	21-11 W	30-11 W	40-11 W
8					40-8 W

订货示例：14-19W BR215 10片

BSW,BSF,BSP

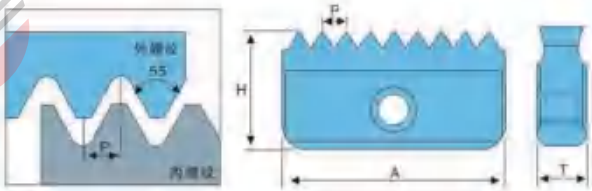

BSPT-55° 英国标准锥管螺纹刀片

H	6.3	7.5	12	16	20
T	2.9	3.1	4.7	5.5	6.3
加工螺距	尺寸 Dimensions(mm)=A				
tpi	12	14	21	30	40
19	12-19 BSPT	14-19 BSPT			
14		14-14 BSPT	21-14 BSPT		
11			21-11 BSPT	30-11 BSPT	40-11 BSPT

订货示例：14-19BSPT BR215 10片

BSPT

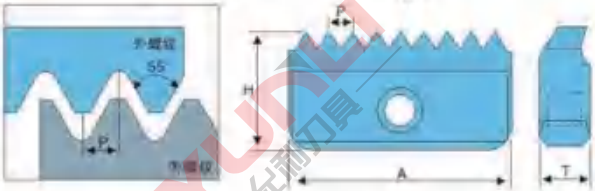

NPT-60° 美国标准锥管螺纹刀片

H	6.3	7.5	12	16	20
T	2.9	3.1	4.7	5.5	6.3
加工螺距	尺寸 Dimensions(mm)=A				
tpi	12	14	21	30	40
18		14-18 NPT			
14		14-14 NPT	21-14 NPT		
11.5	12-18 NPT		21-11.5 NPT	30-11.5 NPT	40-11.5 NPT
8				30-8 NPT	40-8 NPT

订货示例：14-19 NPT BR215 10片

NPT

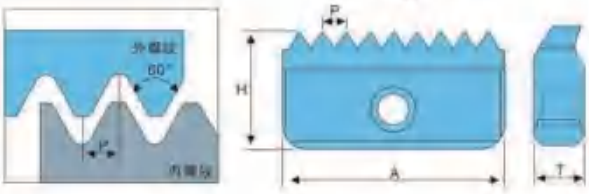

PG螺纹刀片

H	7.5	12	16
T	3.1	4.7	5.5
加工螺距	尺寸 Dimensions(mm)=A		
tpi	14	21	30
18	14-18 PG (PG 9,11,13.5,16)	21-18 PG (PG 16)	
16		21-16 PG (PG 21,29,36,42,48)	30-16 PG (PG 36,42,48)

PG-DIN 40430

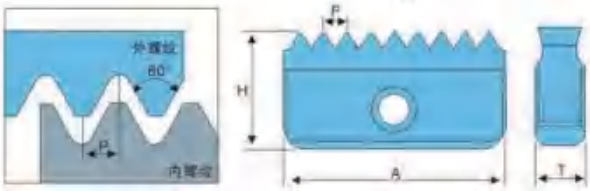

单刃螺纹铣刀杆

型号 Ordering Code	尺寸 Dimensions(mm)						刀片 Insert	螺钉 Screw	扳手 Wrench
	A	D	D1	D2	L	L1			
SR0009H12	12	9.5	20	7.5	85	14	12****	M2.5X7	T8
SR0010H12	12	9.5	20	7.5	85	16	12****	M2.5X7	T8
SR0012F14	14	12.0	20	8.9	75	20	14****	M3X8	T8
SR0014H14	14	14.5	20	11.2	85	25	14****	M3X8	T8
SR0017H14	14	17.0	20	13.4	85	30	14****	M3X8	T8
SR0018H21	21	18.0	20	14.4	85	30	21****	M3.5X8	T15
SR0021H21	21	21.0	20	16.5	94	40	21****	M3.5X8	T15
SR0029J30	30	29.0	25	22.4	110	50	30****	M4X10	T15
SR0048M40	40	48.0	40	35.0	153	78	40****	M5X14	T20

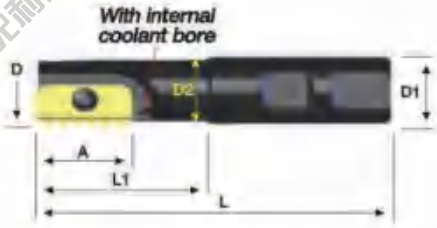

●带内冷孔的刀杆，需要订制！

单刃螺纹铣刀杆(加长型)

型号 Ordering Code	尺寸 Dimensions(mm)				刀片 Insert	螺钉 Screw	扳手 Wrench
	A	D	D1	L			
SR0025K21	21	25	20	125	21****	M3.5X8	T15
SR0031M30	30	31	25	150	30****	M4X10	T15
SR0038M30	30	38	32	150	30****	M4X10	T15
SR0048R40	40	48	40	210	40****	M5X14	T20

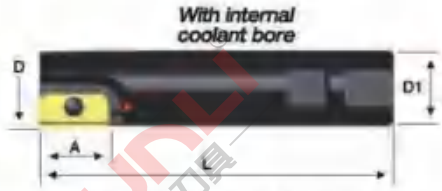

●带内冷孔的刀杆，需要订制！

双刃螺纹铣刀杆

型号 Ordering Code	尺寸 Dimensions(mm)						刀片 Insert	刃数 No.of Insert	螺钉 Screw	扳手 Wrench
	A	D	D1	D2	L	L1				
SR0020H14-2	14	20	20	16	93	41	14****	2	M3X7	T8
SR0030J21-2	21	30	25	24	108	52	21****	2	M3.5X8	T15
SR0040L30-2	30	40	32	30	130	70	30****	2	M4X10	T15
SR0050M40-2	40	50	40	38	153	78	40****	2	M5X14	T20

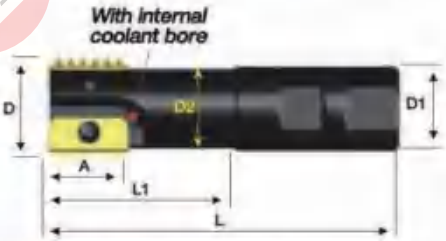

●带内冷孔的刀杆，需要订制！

多刃螺纹铣刀盘

型号 Ordering Code	尺寸 Dimensions(mm)				刀片 Insert	刃数 No.of Insert	螺钉 Screw	扳手 Wrench
	A	D	D1	L				
SR0063C21-5	21	63	22	50	21****	5	M3.5X8	T15
SR0063C30-4	30	63	22	50	30****	4	M4X10	T15
SR0080D30-4	30	80	27	55	30****	4	M4X10	T15
SR0100D30-4	30	100	32	60	30****	4	M4X10	T15
SR0080D40-4	40	80	27	65	40****	4	M5X14	T20
SR0100E40-4	40	100	32	70	40****	4	M5X14	T20

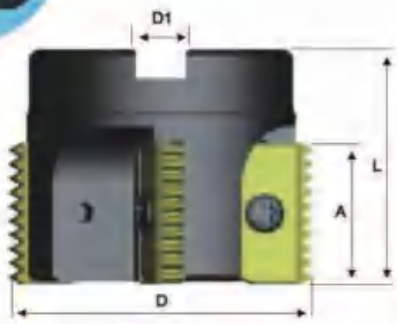

●带内冷孔的刀杆，需要订制！

内螺纹加工刀杆[TT刀片用]

KITG

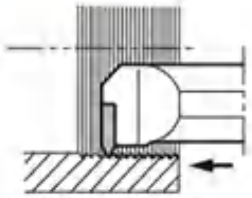

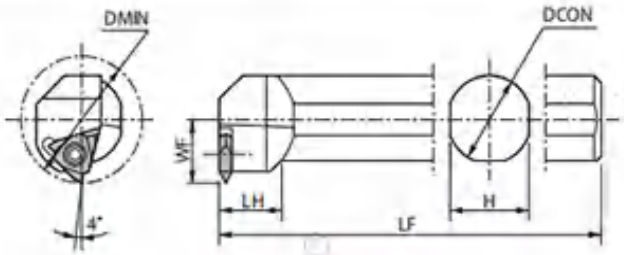

•本图为右手(R)

右手(R)刀杆适用左手(L)刀片，左手(L)刀杆适用右手(R)刀片。

● 刀杆尺寸

型号		最小底孔径	尺寸(mm)					零件			
								紧固螺钉		扳手	
		DMIN	DCON	H	LF	LH	WF				
KITG⁰⁄₀	3525T-16	35	25	23	220	18	17.5	SB-4TR	-	FT-15	-
	4532T-22	45	32	30	250	20	22.5	-	GS-50	-	LW-3

内螺纹加工刀杆

SIN

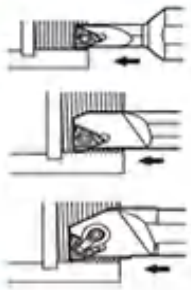

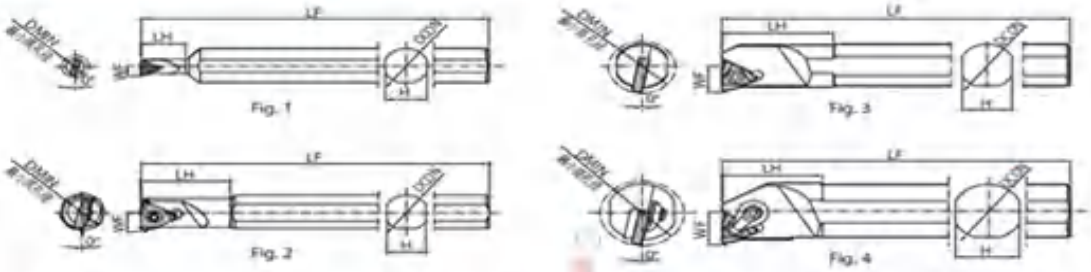

•本图为右手(R)

右手(R)刀杆适用右手(R)刀片，左手(L)刀杆适用左手(L)刀片。

●刀杆尺寸

型号		最小底孔径	尺寸(mm)					形状	零件					适用刀片
									紧固螺钉	压板组	扳手	垫片	垫片紧固螺钉	
		DMIN	DCON	H	LF	LH	WF			5S 6S	FT LW			
SIN⁰⁄₀	0612S-06E	6.4	12	11	100	10	3.8	Fig. 1	SB-2040TR	-	FT-6	-	-	06 IR...
	0816S-08E	7.8	16	15	125	16	4.0		SB-2050TR	-	FT-6	-	-	08 IR...
	1216S-11E	12	16	14	150	25	6.3		SB-2TR	-	FT-8	-	-	11 I⁰⁄₀...
	1516S-11	15				30	7.5							
	1616S-16	16	16	14	150	32	8.6	Fig. 2	SB-3.5TR	-	FT-15	-	-	16 I⁰⁄₀...
	2016S-16	20				37	10.0	Fig. 3						
	2420S-16	24	20	18	180	40	12.0							
	2420S-22	24	20	18	180	40	13.5		SB-4085TR	-	FT-15	-	-	22 IR...

外螺纹加工刀杆

KTN / KTNS

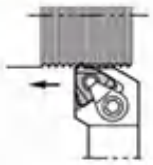

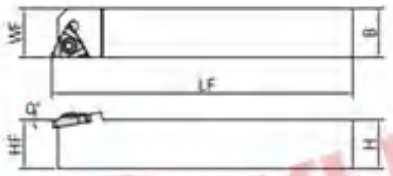

Fig. 1

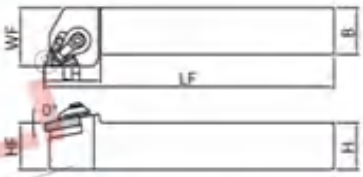

Fig. 2

•本图为右手(R)

右手 (R) 刀杆适用右手 (R) 刀片，左手 (L) 刀杆适用左手 (L) 刀片。

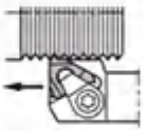

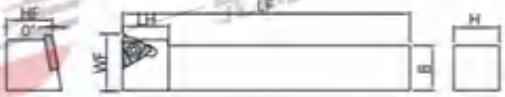

KTNSR1010H-16
1212K-16
Fig. 3

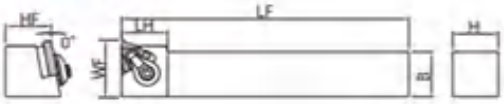

KTNSR1616K-16
2020K-16
Fig. 4

•本图为右手(R)

右手 (R) 刀杆适用右手 (R) 刀片。

刀杆尺寸

型号		尺寸 (mm) H	HF	B	LF	LH	WF	形状	零件 压板组	紧固螺钉	扳手	垫片	垫片紧固螺钉	适用刀片
KTN[R/L]	1216JX-16F	12	12	16	120	-	16	Fig. 1	-	SB-3.5TR	LTW-15S	-	-	16E[R/L] ...
	1616H-16	16	16		100	25	20	Fig. 2	CPS-5S	-	FT-15	TN-32	SP3X8	
	1616JX-16F				120	-	16	Fig. 1	-	SB-3.5TR	LTW-15S	-	-	
	2020H-16*	20	20	20	100	25	25	Fig. 2	CPS-5S	-	FT-15	TN-32	SP3X8	
	2020JX-16F				120	-	20	Fig. 1	-	SB-3.5TR	LTW-15S	-	-	
	2020K-16				125	25	25	Fig. 2	CPS-5S	-	FT-15	TN-32	SP3X8	
	2525M-16	25	25	25	150		30							
	2525M-22	25	25	25	150	29	32		CPS-6S	-	LW-3	TN-43	SP3X8	22ER ...
	3225P-22	32	32		170	34								
KTNSR	1010H-16	10	10	10	100	16	16	Fig. 3	-	SB-3.5TR	FT-15	-	-	16ER ...
	1212K-16	12	12	12	125	18	18							
	1616K-16	16	16	16			22	Fig. 4	CPS-5S	-		TN-32	SP3X8	
	2020K-16	20	20	20		20	27.4							

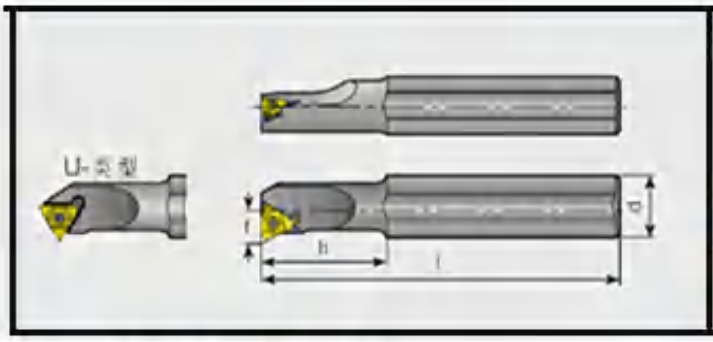

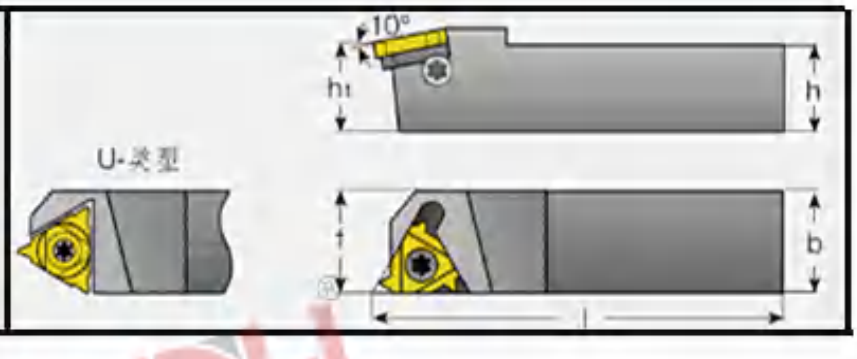

SIR/L内螺纹刀杆

型号	尺寸 d	l	l_1	Dmin	f	刀片[2]
SIR 0005 H06-W[1][3]	12	100	12	6.4	4.3	06 IR...
SIL 0005 H06-W[1][3]	12	100	12	6.4	4.3	06 IL...
SIR 0007 K08[1]	16	125	18	7.8	5.3	08 IR...
SIL 0007 K08[1]	16	125	18	7.8	5.3	08 IL...
SIR 0008 K08U[1]	16	125	21	9.0	6.4	08 UIRL...
SIL 0008 K08U[1]	16	125	21	9.0	6.4	08 UIRL...
SIR/L 0010 H11[1]	10	100	—	12	7.4	11 IR/L...
SIR/L 0010 K11[1]	16	125	25	12	6.5	
SIR/L 0013 L11[1]	16	140	32	15	8.0	
SIR/L 0013 M16[1]	16	150	32	16	10.0	16 IR/L...
SIR/L 0016 P16[1]	20	170	40	19	11.4	
SIR 0020-16-AD	20	80	—	24	13.4	16 IR/L...
SIR 0025-16-AD	25	100	—	29	16.3	
SIR/L 0020 P16	20	170	—	24	13.4	
SIR/L 0025 R16	25	200	—	29	16.3	
SIR/L 0032 S16	32	250	—	36	19.6	
SIR/L 0040 T16	40	300	—	44	23.8	
SIR/L 0050 U16	50	350	—	54	28.7	

SER/L外螺纹刀杆

型号	尺寸 h=h1	b	l	f	刀片[2]
SER/L 0808 H11[1]	8	8	100	11	11 ER/L...
SER/L 1010 H11[1]	10	10	100	11	
SER/L 1212 F16	12	12	80	16	16 ER/L...
SER/L 1616 H16	16	16	100	16	
SER/L 2020 K16	20	20	125	20	
SER/L 2525 M16	25	25	150	25	
SER/L 3232 P16	32	32	170	32	
SER/L 2525 M22	25	25	150	25	22 ER/L...
SER/L 3232 P22	32	32	170	32	
SER/L 4040 R22	40	40	200	40	
SER/L 3232 P22U	32	32	170	32	22 UERL...
SER/L 4040 R22U	40	40	200	40	
SER/L 2525 M27	25	25	150	25	27 ER/L...
SER/L 3232 P27	32	32	170	32	
SER/L 4040 R27	40	40	200	40	
SER/L 3232 P27U	32	32	170	32	27 UERL...
SER/L 4040 R27U	40	40	200	40	

CSVT型螺纹刀片

刀片形状	刀片型号	排屑槽	螺距 (mm)	牙/英寸 (TPI)	尺寸(mm) r_ε	PVD涂层微粒子硬质合金 YL10	YL930
〈A 型〉 ●图示为右手刀	CSVT 11F¾ P60-035A	无	0.2～0.5	127-51	最大0.03	●	●
〈B 型〉 ●图示为右手刀	11F¾ P60-035B	无	0.2～0.5	127-51	最大0.03	●	●

旋转铣刀刀片

形状	型号	IC	S	BS	RE	YL10	YL740	YL930
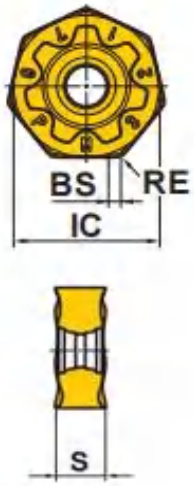	NNMU200708ZEN-MP	20	8	1	0.8	●	○	●

YUNLI 允利刀具

日立刀片

产品型号	材质
RPMW1003MOEN	JP4020
RPMW1003MOEN	SH8020
RPMT1204MOTN-HK	JP4020
APMT1135PDER-HT精加工	JP4020
APMT1135PDER-HS粗加工	JP4020
APMT1604PDER-HT精加工	JP4020
APMT1604PDER-HS粗加工	JP4020
AR JP4020系列	
RDMT0802MOTN	JP4020
RDMT10T3MOTN	JP4020
RDMT1204MOTN	JP4020
RDMX1604MOTN	JP4020
RDMW0802MOEN-HS	JP4020
RDMW10T3MOTN-HS	JP4020
RDMW1204MOTN-HS	JP4020
AR CY250系列	
RDMT0802MOTN	CY250
RDMT10T3MOTN	CY250
RDMT1204MOTN	CY250
RDMX1604MOTN	CY250
AR JX1005系列	
RDMT0802MOTN	JX1005
RDMT10T3MOTN	JX1005
RDMT1204MOTN	JX1005
RDMX1604MOTN	JX1005
AR ATH08M系列	
RDMW0501MOEN	ATH08M
AJU JP4020系列	
00MT060204	JP4020
CPMT080204	JP4020
CPMT090204Z	JP4020
CPMT090308	JP4020
CPMT120308Z	JP4020
CPMT120408	JP4020
CPMT160408Z	JP4020
AJU CY250系列	
CCMT060204	CY250
CPMT080204	CY250
CPMT090204Z	CY250
CPMT090308	CY250
CPMT120308Z	CY250
CPMT120408	CY250
CPMT160408Z	CY250
ASRT JP4020系列	
WDNW09T320	JP4020
WDNW120420	JP4020
WDNW140520	JP4020

产品型号	材质
ABP系列刀片	
ZCHG80	PJP08M
ZCHG100	PJP08M
ZCHG120	PJP08M
ZCHG160	PJP08M
ZCHG200	PJP08M
ZCHG250	PJP08M
AHU系列	
JDMT100308R	PTH30E
JDMT100320R	PTH30E
JDMT100308R-FW	SH8020
JDMT100308R-FW	JP4020
JDMT150508R	PTH30E
JDMT150520R	PTH30E
JDMT150530R	PTH30E
JDMT150508R-FW	JP4020
ASRT JS4060系列-针对软料	
WDNW09T320	JS4060
WDNW120420	JS4060
WDNW140520	JS4060
UEX 系列	
APNT120204SR	HC844
APNT120208SR	CH550
APET120204SR	CH550
ADNT150308SR	HC844
ADNT160308SR	CH550
ADET160308SR	CH550
ASJ 系列	
ACMT100308R	CY250
ADMT100308L	CY250
APMT12T308R	CY250
ADMT12T308L	CY250
APMT150408R	CY250
APMT160408L	CY250
APMT粗料工针工三L	CY250
APMT190508L	CY250
三角刀片系列	
TPMN160308	EX35
TPMN160308	CY25
ASRT 多刃	
EPNW0603TN-8	JP4020
EPNW0603TN-8	JX1005
EPNW0603TN-8	JX1045
JDMT070204R	JP4020
JDMT070208R	JP4020

YUNLI 允利刀具

MITSUBISHI 三菱常用车刀粒

MITSUBISHI MATERIALS

序号	产品型号	材质
01	TCMT 090204	NX2525
02	TCMT 090204	UE6020/VP15TF
03	TCMT 110202/04	NX2525/HTI10
04	TCMT 110202/04	UE6110/VP15TF/US735
05	TCMT 16T304/08	NX2525/HTI10
06	TCMT 16T304/08	UE6110/VP15TF/US735
07	TPMH 110304-MV	VP15TF
08	TCGT 060102/04L-F	HTI10/NX2525
09	TCGT 060102/04L-F	VP15TF
10	TPGH 080204L-FS	HTI10/NX2525
11	TPGH 080204L-FS	VP15TF
12	TPGH 090202/04L-FS	HTI10/NX2525
13	TPGH 090202/04L-FS	VP15TF
14	TPGH 110304L-FS	HTI10/NX2525
15	TPGH 110302/04L-FS	VP15TF
16	TPGX 080204L	NX2525
17	TPGX 090202/04L	NX2525
18	TPGX 090208	NX2525
19	TPGX 110304L	NX2525
20	TNGG 160402/04R-F	NX2525
21	TNMG 160404/08-MA/MS	VP15TF
22	TNMG 160404/08-MA-MS	UE6020/UC5115/US735
23	TNMG 160404R-[illegible]	NX2525
24	TNMG 160404[illegible]-FS	NX2525
25	TNMG 160404[illegible]-ES	US735
26	CCMT 060202/04	NX2525/HTI10
27	CCMT 060202/04/08	UE6110/VP15TF/US735
28	CCMT 09T302/04/08	NX2525/HTI10
29	CCMT 09T304/08	VP15TF
30	CCMT 09T304/08	UC5115/US735/UE6110
31	CCMW 09T304	UC5105/UC5115
32	CCMT 120404/08	HTI10/NX2525
33	CCMT 120404/08	VP15TF/UC515/UE6110
34	CCMT 120404/08	UC5115/VP15TF/UE6110
35	CNMA 120404/08	UC5115/UC5105
36	CNMG 120404/08	NX2525
37	CNMG 120404/08-MA-MS	VP15TF
38	CNMG 120404/08-MA-MS	UE6020/UC5115/US735
39	WNMG 060404/08-MA	US735/UE6010
40	WNMG 06T312-MA	US735
41	WNMG 080404/08	NX2525
42	WNMG 080404/08-MA-MS	VP15TF
43	WNMG 080404/08-MA-MS	UE6020/UC5115/US735
44	WNMG 080412	UC5115
45	CNMG 120412	UC5115
46	SCMT 09T304	NX2525
47	SNMG 120404/08-MA	VP15TF
48	SNMG 120404/08-MA	UE6020/UC5115/US735
49	DCMT 070204-MV	NX2525
50	DCMT 070204	NX2525
51	DCMT 070204	VP15TF/UE6110/US735
52	DCMT 070204-MV	VP15TF
53	DCMT 11T304-MV	VP15TF
54	DCMT 11T304/08	NX2525
55	DCMT 11T304/08	US735/VP15TF/UE6110
56	DCMW 11T304/08	UC5115
57	DNMG 150404/08-MA	US735/VP15TF
58	DNMG 150604-MA	US735/VP15TF
59	VCMT 110304	NX2525
60	VCMT 110304	VP15TF/US735/UE6020
61	VCMT 160404/08	NX2525
62	VCMT 160404/08	US735/VP15TF/UE6110
63	VBMT 110304/08-MV	NX2525
64	VBMT 110304/08-MV	US735/VP15TF
65	VBMT 160404/08-MV	NX2525
66	VBMT 160404/08-MV	US735/VP15TF/UE6020
67	VNMG 160404/08	NX2525
68	VNMG 160404/08	VP15TF
69	VNMG 160404/08-MA	UE6020/UC5115/US735
70	DGM 30CT	UE6020
71	DGM 40CT	VP20MF
72	QOGT 1035R-G1	HTI10
73	QOMT 1035R-M2	VP15TF
74	QOMT 1342R-M2	VP15TF
75	MGTR 43300	UTI20T
76	MGTR 43125X145	UTI20T
77	MGTR 4330	UTI20
	三菱常用铣刀粒	
78	R2.5 RDMW0517MOE	VP15TF/AP15TF
79	APMT 1135PDER-H1	VP15TF
80	APMT 1135PDER-H2	NX2525/HTI10
81	APGT 1135PDER-G1	HTI10
82	APGT 1604PDER-G2	HTI10
83	AOMT 123608PEER-M	VP15TF
84	AOMT 123608PEER-H	VP15TF
85	APMT 1604PDER-H2	NX2525/HTI10
86	TPMN 110308	NX2525
87	TPMN 160304 日本产	UTI20T
88	TPMN 160308 欧洲产	UTI20T
89	TPMN 220408/12 日本产	UTI20T
90	TPMN 220408/12 欧洲产	UTI20T
91	SPEN 1203 EDR	NX2525
92	SENN 1203 AFTN1	NX2525
93	SEEN 1203 AFTN1	NX2525
94	SEEN 1504 AFTN1	NX2525
95	SPKN 1504 EDR	NX2525
96	SPMW 090304/08	NX2525
97	SEMT 13T3AGSN-JM	F7030/NP15TF
98	SDMT 09T308ZZSR-JM	VP15TF
99	JDMW 080320ZZSR-FT	VP15TF
100	JDMW 09T320ZDSR-FT	VP15TF
101	JDMW 120420ZDSR-FT	VP15TF
102	JDMW 140520ZDSR-FT	VP15TF
103	JDMT 08T215ZZSR-JM	VP15TF
104	JDMT 0803ZDSR-JM	VP15TF
105	JDMT 09T320ZDSR-JM	VP15TF
106	JDMT 120420ZDSR-JM	VP15TF
107	JDMT 140520ZDSR-JM	VP15TF
108	JDMT 120420ZDSR-JM	VP15TF
109		VP15TF
110	JDMT 140520ZDSR-JM	VP15TF
111	JDMT 140520ZDSR-JM	VP15TF

YUNLI 允利刀具

东芝刀片

产品型号	材质
R4 RPMT08T2MOE	AH120
R5 RPMW1003MO	AH120
R5厚 RPMT10T3MOE	AH120
R6 RPMT1204MOE	AH120
APMT1135PDER	AH120
APMT1604PDER	AH120
TPMN160308	NS740
TPMN220404/08/12	NS740

Duracarb 杜龙卡浦刀片

产品型号	材质
RPMW1003MO	DP5320
RPMT1204M-C	DP5320
APMT1135PDER	DP5320
APMT1604PDER	DP5320

DIJET 黛杰刀片

产品型号	材质
RPMW0802MO	JC5118
RPMW1003MO	JC5118
RPMW1204MO	JC5118
RDMT1204MOT	JC5118
APMT1135PDER-0.8	JC8050
APMT1604PDER-08	JC8050
ZCMT100308R	JC8015
ZPMT160408R	JC5015
WDMW080520ZTR	JC8015
RDMX1604MOT	JC8015
WCMX030208	JC215V
WCMX040208	JC215V
WCMX050308	JC215V
WCMX06T308	JC215V
WCMX080412	JC215V
WNMG080408/04 SF	JC8015
CNMG120408x04 SF	JC8015
TNMG160404/08 SF	JC8015

KORLOY 韩国科罗伊刀片

克劳伊槽刀片	材质
MGMN200M	PC9030
MGMN300M	PC9030
MGMN400M	PC9030
MGMN500M	PC9030
克劳伊铝刀片	**材质**
CCGT060202-AK	H01
CCGT060204-AK	H01
CCGT09T302-AK	H01
CCGT09T304-AK	H01
CCGT11T304-AK	H01
DCGT070202-AK	H01
DCGT070204-AK	H01
DCGT11T302-AK	H01
DCGT11T304-AK	H01
VCGT110302-AK	H01
VCGT110304-AK	H01
VCGT160402-AK	H01
VCGT160404-AK	H01
CCMT060204HMP	PC9030
CCMT060204HMP	NC3220
CCMT09T304HMP	PC9030
CCMT09T304HMP	NC3220
CCMT09T308HMP	PC9030
CCMT09T308HMP	NC3220
CNMG120404HM	PC9030
CNMG120404HA	PC9030
CNMG120404HS	PC9030
CNMG120404GS	PC9030
CNMG120404HM	NC3220
CNMG120408HM	PC9030
CNMG120408HA	PC9030
CNMG120408HS	PC9030
CNMG120408GS	PC9030
CNMG120408HM	NC3220

克劳伊车刀片	材质
WNMG080404HM	PC9030
WNMG080404HA	PC9030
WNMG080404HS	PC9030
WNMG080404GS	PC9030
WNMG080404HM	NC3220
WNMG080408HM	PC9030
WNMG080408HA	PC9030
WNMG080408HS	PC9030
WNMG080408GS	PC9030
WNMG080408HM	NC3220
TNMG160404HM	PC9030
TNMG160404HA	PC9030
TNMG160404HS	PC9030
TNMG160404GS	PC9030
TNMG160404HM	NC3220
TNMG160408HM	PC9030
TNMG160408HA	PC9030
TNMG160408HS	PC9030
TNMG160408GS	PC9030
TNMG160408HM	NC3220
SNMG120404HM	PC9030
SNMG120404HA	PC9030
SNMG120404HS	PC9030
SNMG120404GS	PC9030
SNMG120404HM	NC3220
SNMG120408HM	PC9030
SNMG120408HA	PC9030
SNMG120408HS	PC9030
SNMG120408GS	PC9030
SNMG120408HM	NC3220
VNMG160404HM	PC9030
VNMG160404HM	NC3220
VNMG160408HM	PC9030
VNMG160408HM	NC3220

Carmex Precision Tools Ltd. 以色列螺蚊刀片

序号	产品型号	材质
01	16ER10ISO	BMA
02	16ER125ISO	BMA
03	16ER150ISO	BMA
04	16ER175ISO	BMA
05	16ER20ISO	BMA
06	16ER25ISO	BMA
07	16ER30ISO	BMA
08	16ERAG60	BMA
09	16ERA60	BMA
10	16ERG60	BMA
11	16ER11W	BMA
12	16ER14W	BMA
13	16ER19W	BMA
14	16ER10UN	BMA
15	16ER12UN	BMA
16	16ER14UN	BMA
17	16ER115NPT	BMA
18	16ER14NPT	BMA
19	16ER18NPT	BMA
20	16ER11BSPT	BMA
21	16ER14BSPT	BMA

序号	产品型号	材质
22	16ER19BSPT	BMA
23	16IR1[illegible]ISO	BMA
24	16IR125ISO	BMA
25	16IR150ISO	BMA
26	16IR175ISO	BMA
27	16IR20ISO	BMA
28	16IR25ISO	BMA
29	16IR30ISO	BMA
30	16IRAG60	BMA
31	16IRA60	BMA
32	16IRG60	BMA
33	11IR10ISO	BMA
34	11IR125ISO	BMA
35	11IR150ISO	BMA
36	11IR175ISO	BMA
37	11IR20ISO	BMA
38	11IR25ISO	BMA
39	11IR30ISO	BMA
40	11IRAG60	BMA
41	11IRA60	BMA
42	11IRG60	BMA

vargus 瓦格斯车牙刀片

序号	产品型号	材质
01	3ER10ISO	VTX
02	3ER125ISO	VTX
03	3ER150ISO	VTX
04	3ER175ISO	VTX
05	3ER20ISO	VTX
06	3ER25ISO	VTX
07	3ER30ISO	VTX
08	3ERAG60	VTX
09	3ERA60	VTX
10	3ERG60	VTX
11	3ERAG55	VTX

序号	产品型号	材质
01	3IR10ISO	VTX
02	3IR125ISO	VTX
03	3IR150ISO	VTX
04	3IR175ISO	VTX
05	3IR20ISO	VTX
06	3ER25ISO	VTX
07	3IR30ISO	VTX
08	3IRAG60	VTX
09	3IRA60	VTX
10	3IRG60	VTX
11	3IRAG55	VTX

前扫

刀片形状	型号	排屑槽	r (mm)	库存 YL10	库存 YL930
	HAOF0533R/L	无	0.05	●	●
	HAOF0533R/L B	有	0.05	●	●
	HAOF0533R/L 03005	无	0.05	●	●
	HAOF0533R/L B03005	有	0.05	●	●

槽刀

刀片形状	型号	排屑槽	W (mm)	最大加工深度(mm)	库存 YL930	库存 YL10
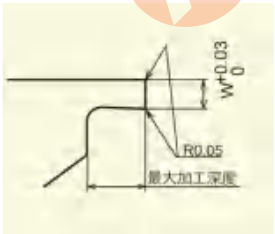 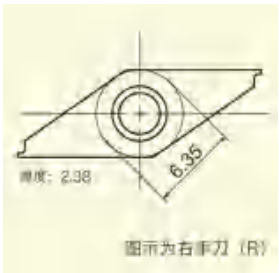	HAOG025R/L	无	0.25	0.3	●	●
	HAOG025R/L B	有	0.25	0.3	●	●
	HAOG050R/L	无	0.50	0.6	●	●
	HAOG050R/L B	有	0.50	0.6	●	●
	HAOG075R/L	无	0.75	1.4	●	●
	HAOG075R/L B	有	0.75	1.4	●	●
	HAOG095R/L	无	0.95	1.4	●	●
	HAOG095R/L B	有	0.95	1.4	●	●
	HAOG100R/L	无	1.00	1.4	●	●
	HAOG100R/L B	有	1.00	1.4	●	●
	HAOG150R/L	无	1.50	2.6	●	●
	HAOG150R/L B	有	1.50	2.6	●	●

后扫

刀片形状	型号	排屑槽	最大切深 (mm)	最大加工段 (mm)	库存	
					YL930	YL10
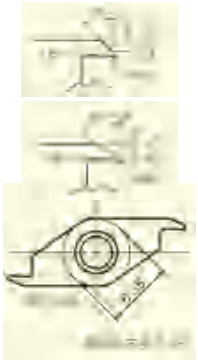	HAOB035R/L	无	0.6	2.5	●	●
	HAOB035R/L B	有	0.6	2.5	●	●
	HAOB035R/L-C	无	1.3	2.5	●	●
	HAOB035R/L B-C	有	1.3	2.5	●	●

切断

刀片形状	型号	排屑槽	W (mm)	最大切断 (mm)	r (mm)	库存	
						YL10	YL930
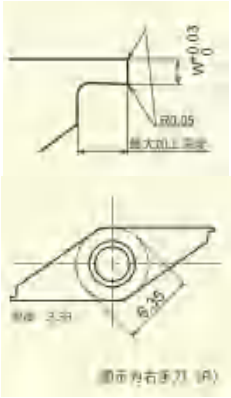	HAOC050R/L-SH	无	0.5	3.0	0.03	●	●
	HAOC050R/L B-SH	有				●	●
	HAOC070R/L-SH	无	0.7	3.0	0.03	●	●
	HAOC070R/L B-SH	有	0.7	3.0	0.03	●	●
	HAOC070R/L	无	0.7	5.0	0.03	●	●
	HAOC070R/L-B	有	0.7	5.0	0.03	●	●
	HAOC100R/L-SH	无	1.0	3.0	0.03	●	●
	HAOC100R/L B-SH	有	1.0	3.0	0.03	●	●
	HAOC100R/L	无	1.0	7.0	0.03	●	●
	HAOC100R/L B	有	1.0	7.0	0.03	●	●
	HAOC120R/L	无	1.2	7.0	0.03	●	●
	HAOC120R/L B	有	1.2	7.0	0.03	●	●
	HAOC150R/L 05	无	1.5	7.0	0.05	●	●

刀杆

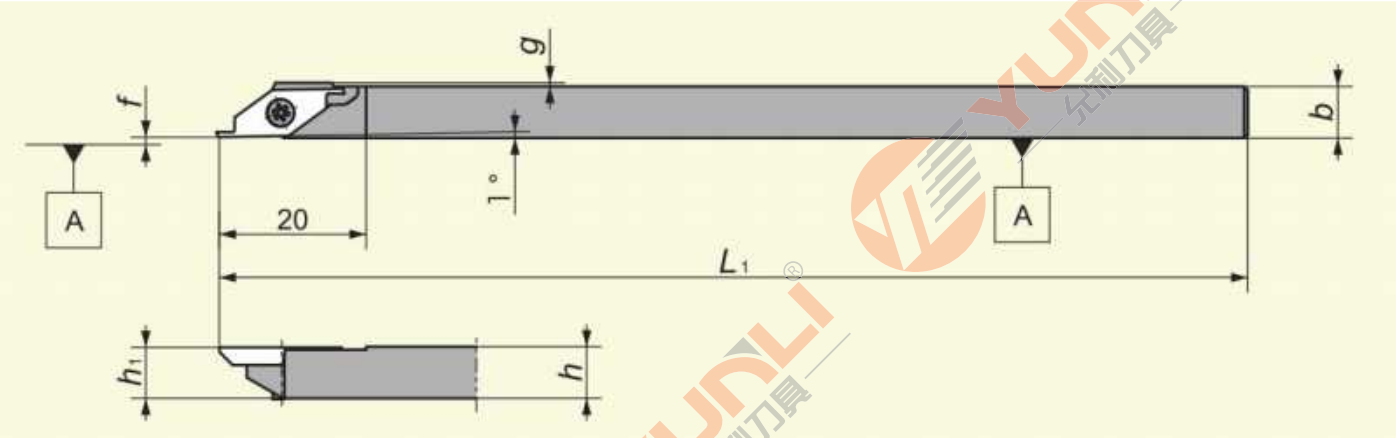

刀杆形状	刀杆型號	尺寸（mm）					刀片	零部件		庫存	
		h	b	L	h1	g		螺絲	扳手	R	L
	A-HAOR/L 07	7	7	140	7	0.5	HAOR(前扫)	LRIS-2.5*7	CLM-15S	●	●
	A-HAOR/L 08	8	8	140	8	0	HAOB(后扫)			●	●
	A-HAOR/L 095	9.5	9.5	140	9.5	0	HAOG(槽刀)			●	●
	A-HAOR/L 10	10	10	140	10	0	HAOC(切断)			●	●
	A-HAOR/L 12	12	12	140	12	0				●	●

HAOG槽刀系列

刀片形状	型号	排屑槽	W (mm)	最大加工深度	YL10	YL740	YL930
 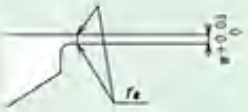	HAOG025R/L	无	0. 25	0. 30	●	○	●
	HAOG030R/L	无	0. 30	0. 30	●	○	●
	HAOG035R/L	无	0. 35	0. 30	●	○	●
	HAOG040R/L	无	0. 40	0. 45	●	○	●
	HAOG045R/L	无	0. 45	0. 45	●	○	●
	HAOG055R/L	无	0. 55	0. 60	●	○	●
	HAOG060R/L	无	0. 60	0. 60	●	○	●
	HAOG065R/L	无	0. 65	0. 60	●	○	●
	HAOG070R/L	无	0. 70	0. 60	●	○	●
	HAOG080R/L	无	0. 80	1. 40	●	○	●
	HAOG085R/L	无	0. 85	1. 40	●	○	●
	HAOG090R/L	无	0. 90	1. 40	●	○	●
	HAOG110R/L	无	1. 10	2. 60	●	○	●
	HAOG120R/L	无	1. 20	2. 60	●	○	●
	HAOG130R/L	无	1. 30	2. 60	●	○	●
	HAOG140R/L	无	1. 40	2. 60	●	○	●

HAOC切断刀片

刀片形状	型号	排屑槽	W (mm)	最大切断	r	YL10	YL930
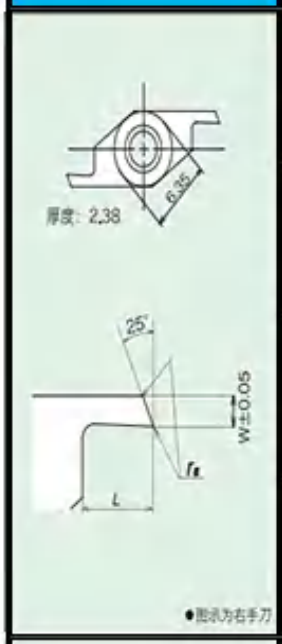	HAOC060R/L	无	0. 60	5. 0	0. 03	●	●
	HAOC080R/L	无	0. 80	5. 0	0. 03	●	●
	HAOC090R/L	无	0. 90	5. 0	0. 03	●	●
	HAOC130R/L	无	1. 30	7. 0	0. 03	●	●
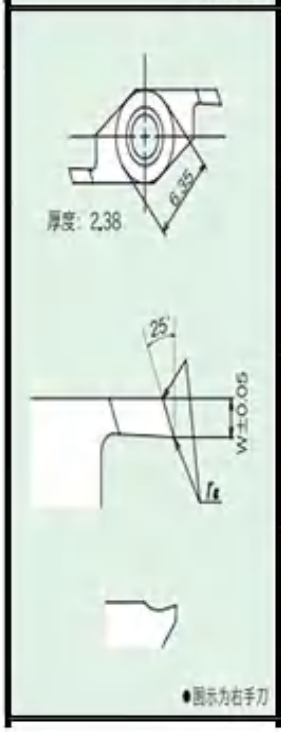	HAOC060R/LB	有	0. 60	5. 0	0. 03	●	●
	HAOC080R/LB	有	0. 80	5. 0	0. 03	●	●
	HAOC090R/LB	有	0. 90	5. 0	0. 03	●	●
	HAOC130R/LB	有	1. 30	7. 0	0. 03	●	●

允利刀具-争做中国高品质刀具的排头兵!

专业生产数控刀片和刀杆的厂家发展为集批发销售为一体的综合型实业公司，拥有瑞士进口的全自动数控生产设备及高精度的检测设备，采用瑞士，日本等进口基体材料，先进的生

固话传真：0751-3388669
技术支持：15919815238
业务热线：17768809996 / 18826585258
业务 QQ：2818956088 / 1876036018 / 709275517
地　　址：广东省韶关市始兴县制造基地制笔大道2号